CLR PROJECT 03-22-DR-07
WARD 3
R STREET AT FILLMORE STREET DRAINAGE

SCALE: 1"=200'

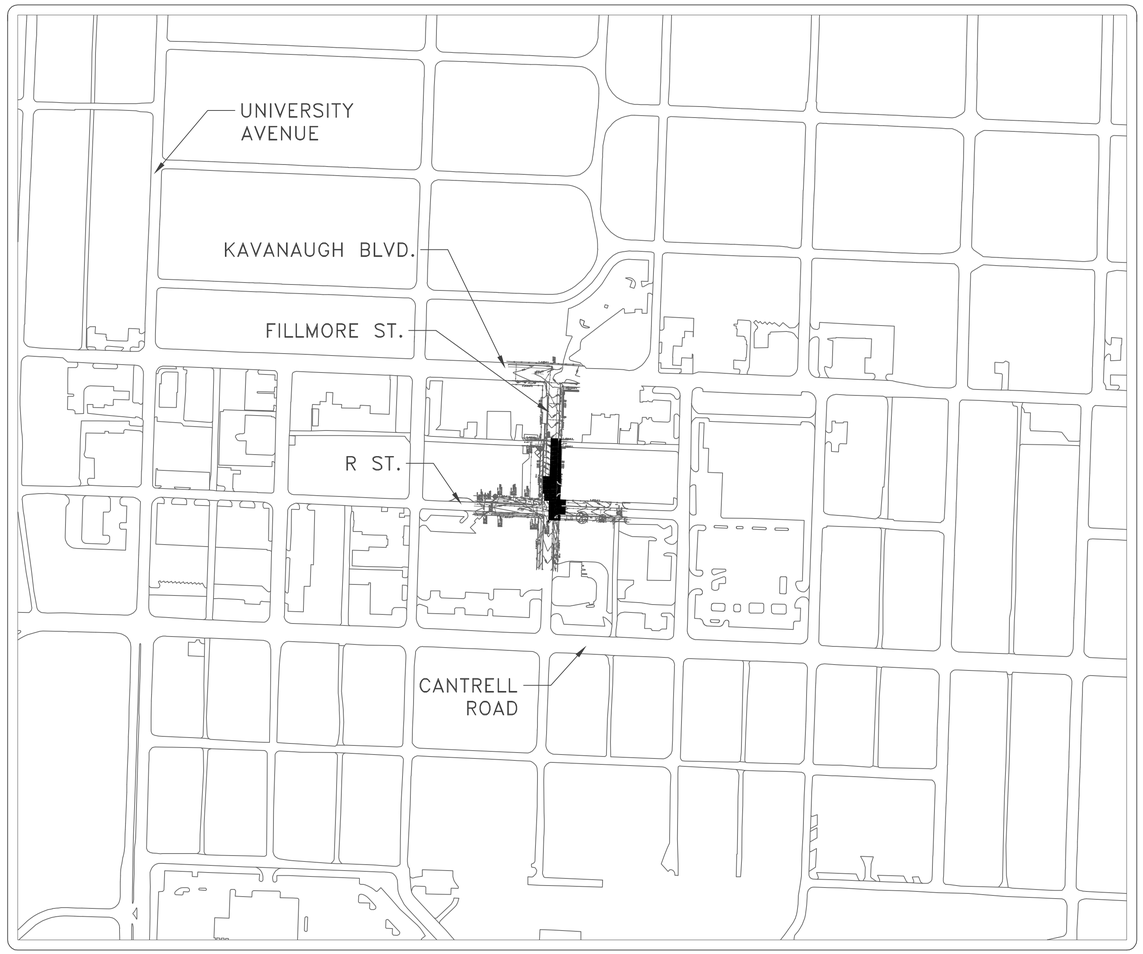

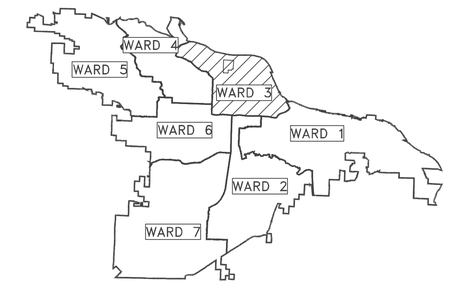

PROJECT LOCATION – WARD 3
34°46'09.25'N 92°20'13.43"W
34.7692–92.3371

SHEET NO.	TITLE
C1	COVER SHEET
C2	LEGEND AND DETAIL SHEET
C3	SITE SURVEY
C4	PLAN AND PROFILE
C5	EROSION CONTROL PLAN
C6	TRAFFIC CONTROL PLAN

811 Know what's below. Call before you dig.

2023-2025 BOND PROGRAM

DEPARTMENT OF PUBLIC WORKS
CIVIL ENGINEERING
701 WEST MARKHAM STREET
LITTLE ROCK, ARKANSAS 72201

CROMWELL
1300 east 6th Street little rock, ar 72202
501.372.2900 cromwell.com

REVISIONS	DATE

CITY OF LITTLE ROCK, ARKANSAS
WARD 3 03-22-DR-07 R STREET AT FILLMORE STREET DRAINAGE
COVER SHEET

DEPARTMENT OF PUBLIC WORKS
CIVIL ENGINEERING
701 W. MARKHAM
LITTLE ROCK, ARKANSAS 72201

60% SUBMITTAL

DRAWN BY	MJT
DESIGNED	MJT
CHECKED	CGW
DATE	12-11-2023
SCALE	N.T.S.
PROJECT NO.	##
SHEET NO.	C1

	CLR PROJECT #		
	WARD 3 R St. @ Fillmore St. Drainage 03-22-DR-07		
	11-Dec-23		
ITEM #	**ITEM DESCRIPTION**	**UNIT**	**QUANTITY**
2.01	SITE PREPARATION	LS	1
3.01	UNCLASSIFIED EXCAVATION	CY	95
4.01	AGGREGATE BASE COURSE	TON	605
5.01	BITUMINOUS PRIME COAT	GAL	60
6.01	4" ASPHALT CONCRETE (HOTMIX, BINDER COURSE)	TON	1100
7.01	8" CONCRETE PAVEMENT	SQ	90
8.01	CONCRETE CURB AND GUTTER	LF	240
9.01	CONCRETE SIDEWALKS	SF	1368
16.01	MAINTENANCE OF TRAFFIC	LS	1
19.01	CLEANUP	LS	1
24.01	TEMPORARY EROSION CONTROL	LF	150
SP	SAW CUT AND REMOVE PAVEMENT (SIDEWALKS, ASPHALT, CONCRETE)	SY	785
SP	SAW CUT AND REMOVE CURB AND GUTTER	LF	240
	SUB-TOTAL		

EXISTING

IRON ROD	IR
PK NAIL	PK
R.R. SPIKE	RR(Sp)
CONC. MONUMENT	CM
WATER VALVE	WV
WATER METER	WM
FIRE HYDRANT	FH
GAS METER	GM
GAS VALVE	GV
SIGN POST	
STORM SEWER MANHOLE	D
SANITARY SEWER MANHOLE	S
TELEPHONE BOX	T
ELECTRIC BOX	E
UTILITY POLE	
GUY WIRE	
LIGHT POLE	
CURB	
FENCE	X X X
OVERHEAD ELECTRIC	OE OE
UNDERGROUND TELEPHONE	UGT
UNDERGROUND ELECTRIC	UGE
UNDERGROUND CABLE	UGC
WATER LINE	8"W
SEWER LINE	8"SS
GAS LINE	4"G
STORM SEWER/CULVERT	24" CMP/RCP/DIP S D_x
CONTOUR LINE	650

PROPOSED

PROPOSED CONTOUR	25
PROPOSED SPOT ELEVATION	25.00
STORM SEWER – PIPE	
STORM SEWER – GRATE INLET	
STORM SEWER – JUNCTION BOX	D D
PROPOSED INTEGRAL CURB	
PROPOSED CONCRETE	
PROPOSED ASPHALT	
SEDIMENT BARRIER – BLOCK	SD4
SILT FENCE – TYPE C	SFC
DISTURBED AREA STABILIZATION –PERMANENT GRASSING	TS3

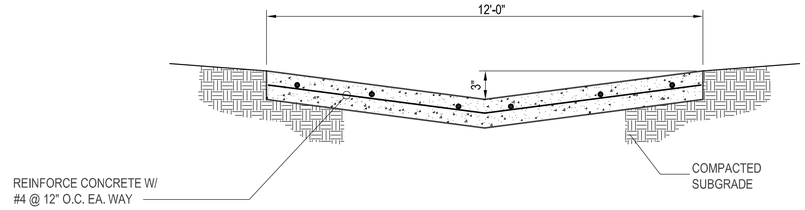

NOTE: CONCRETE SHALL HAVE A MINIMUM COMPRESSIVE STRENGTH OF 3,500 PSI - EARLY HIGH STRENGTH.CONCRETE

1 DRAINAGE SWALE DETAIL

NOT TO SCALE

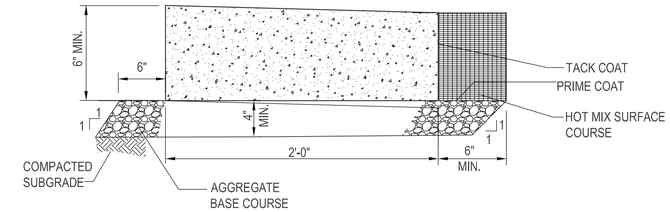

2 FLAT CURB

NOT TO SCALE

REVISIONS	DATE

CITY OF LITTLE ROCK, ARKANSAS
WARD 3 03-22-DR-07 R STREET AT FILLMORE STREET DRAINAGE

LEGEND AND DETAIL SHEET

DEPARTMENT OF PUBLIC WORKS
CIVIL ENGINEERING
701 W. MARKHAM
LITTLE ROCK, ARKANSAS 72201

60% SUBMITTAL

DRAWN BY	MJT
DESIGNED	MJT
CHECKED	CGW
DATE	12-11-2023
SCALE	N.T.S.
PROJECT NO.	CLR #
SHEET NO.	C2

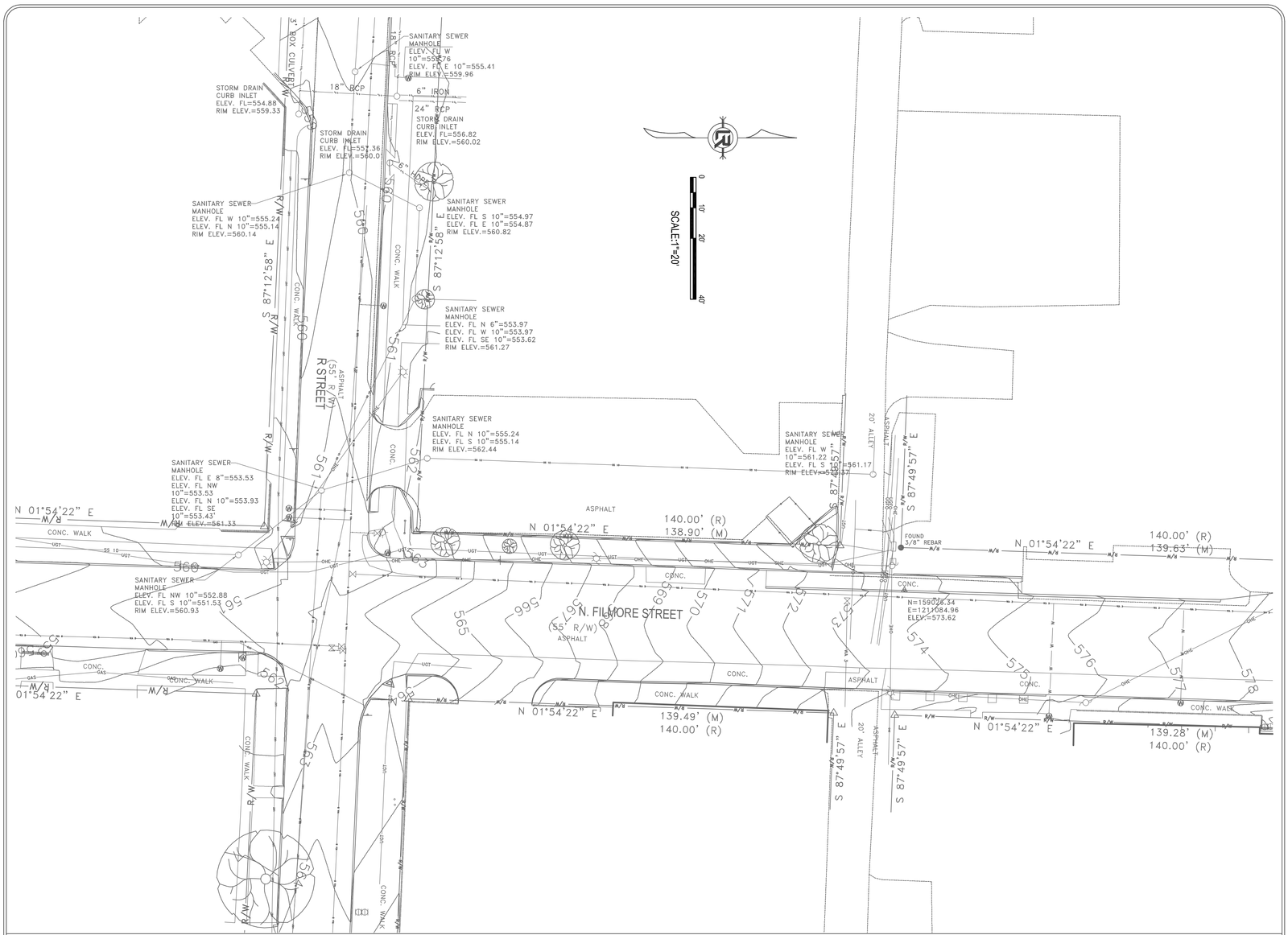

DRAWN BY	MJT
DESIGNED	MJT
CHECKED	CGW
DATE	12-11-2023
SCALE	20 SCALE
PROJECT NO.	
CLR #	
SHEET NO.	C3

60% SUBMITTAL

DEPARTMENT OF PUBLIC WORKS
CIVIL ENGINEERING
701 W. MARKHAM
LITTLE ROCK, ARKANSAS 72201

CITY OF LITTLE ROCK, ARKANSAS

WARD 3 03-22-DR-07 R STREET AT FILLMORE STREET DRAINAGE

SURVEY SHEET

REVISIONS	DATE

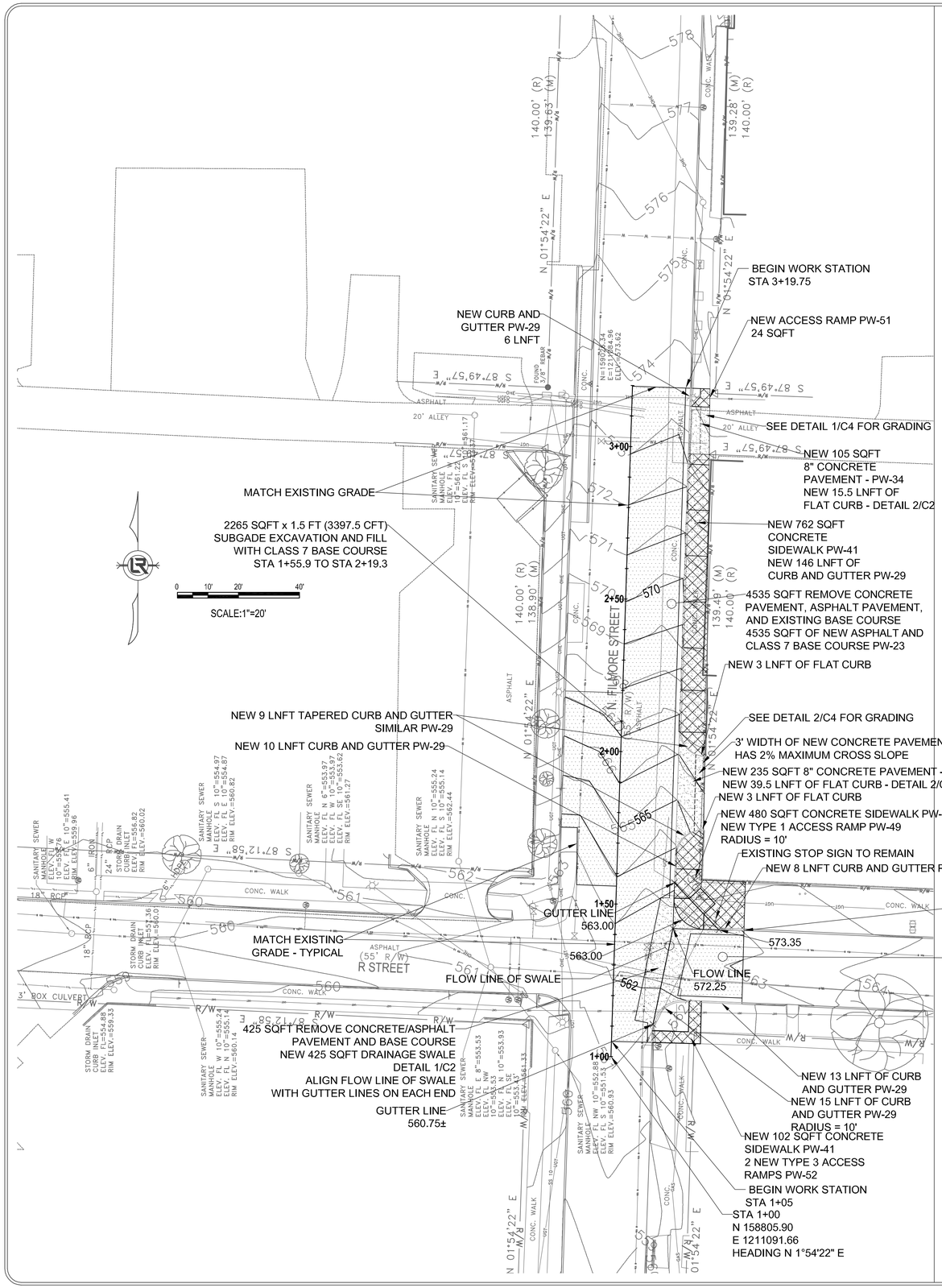

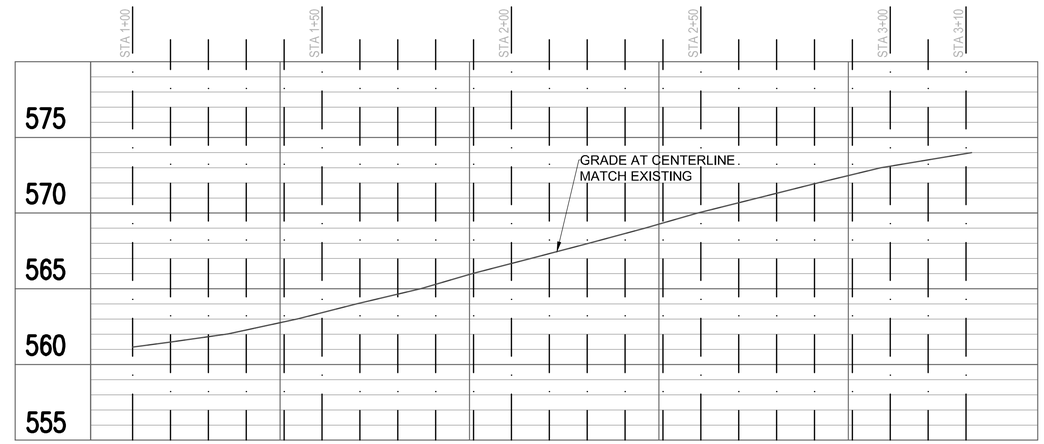

NEW STREET PROFILE

HORIZONTAL SCALE: 1"=20'

VERTICAL SCALE: 1"=5'

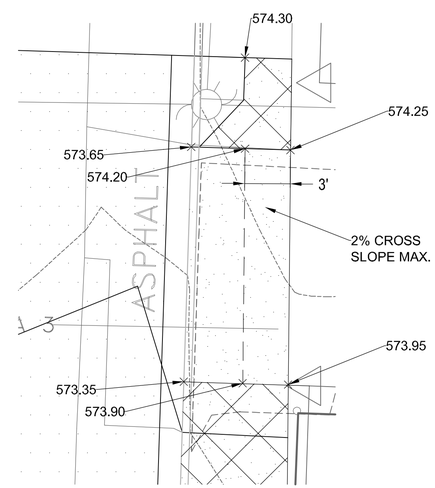

1 DRIVEWAY DETAIL

NOT TO SCALE

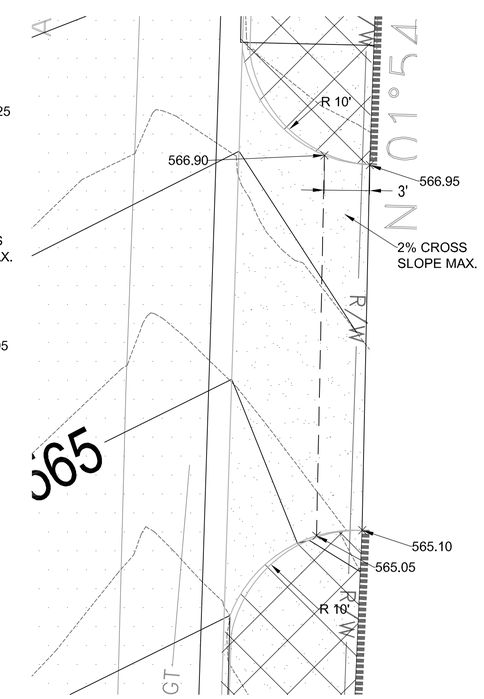

2 DRIVEWAY DETAIL

NOT TO SCALE

NOTE:

1. SAW CUT ALL IMPROVEMENTS AT REMOVAL LINES.

REVISIONS	DATE

CITY OF LITTLE ROCK, ARKANSAS
WARD 3 03-22-DR-07 R STREET AT
FILLMORE STREET DRAINAGE

PLAN AND PROFILE

DEPARTMENT OF PUBLIC WORKS
CIVIL ENGINEERING
701 W. MARKHAM
LITTLE ROCK, ARKANSAS 72201

60% SUBMITTAL

DRAWN BY	MJT
DESIGNED	MJT
CHECKED	CGW
DATE	12-11-2023
SCALE	20 SCALE
PROJECT NO.	CLR #
SHEET NO.	C4

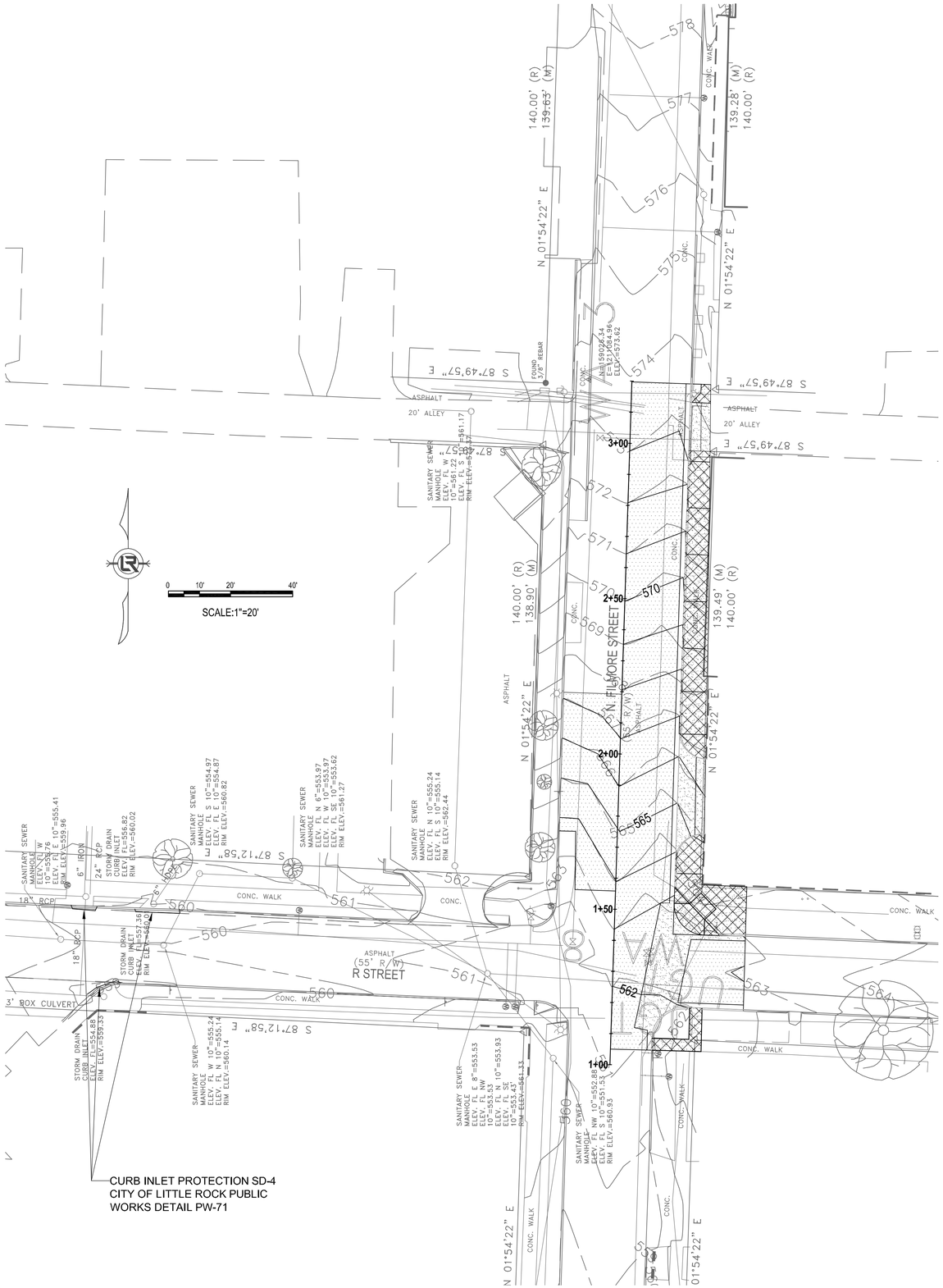

REVISIONS	DATE

CITY OF LITTLE ROCK, ARKANSAS
WARD 3 03-22-DR-07 R STREET AT FILLMORE STREET DRAINAGE

EROSION CONTROL PLAN

DEPARTMENT OF PUBLIC WORKS
CIVIL ENGINEERING
701 W. MARKHAM
LITTLE ROCK, ARKANSAS 72201

60% SUBMITTAL

DRAWN BY	MJT
DESIGNED	MJT
CHECKED	CGW
DATE	12-11-2023
SCALE	20 SCALE
PROJECT NO.	CLR #
SHEET NO.	C5

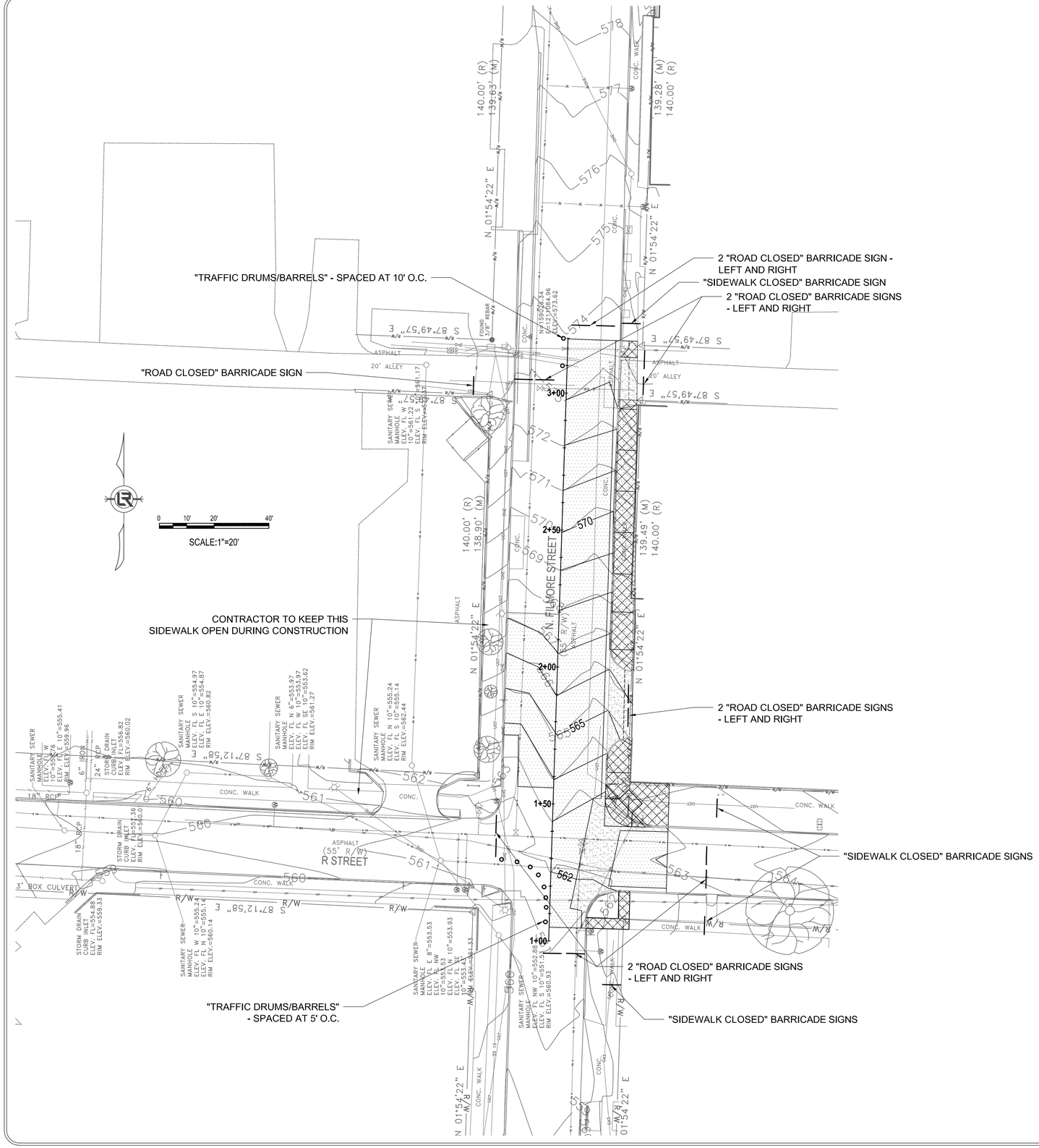

NOTE:

1. REFERENCE ARDOT STANDARD TRAFFIC CONTROLS FOR HIGHWAY CONSTRUCTION STANDARD DRAWING TC-1 FOR NOTES AND DETAILS.
2. USE TYPE III BARRICADE FOR "ROAD CLOSED" SIGNS.
3. MOUNT SIGNS TO BARRICADE.
4. "ROAD CLOSED" - USE RII-2
5. MINIMIZE ROAD CLOSURES - CONSULT WITH CITY OF LITTLE ROCK FOR ROAD CLOSURE TIMING AND DURATION.

REVISIONS	DATE

CITY OF LITTLE ROCK, ARKANSAS
WARD 3 03-22-DR-07 R STREET AT FILLMORE STREET DRAINAGE

TRAFFIC CONTROL PLAN

DEPARTMENT OF PUBLIC WORKS
CIVIL ENGINEERING
701 W. MARKHAM
LITTLE ROCK, ARKANSAS 72201

60% SUBMITTAL

DRAWN BY	MJT
DESIGNED	MJT
CHECKED	CGW
DATE	12-11-2023
SCALE	20 SCALE
PROJECT NO.	CLR #
SHEET NO.	C6