West Central Sports Complex

Concrete Walks, H. C. Seating Pads & Pavilion

8616 Colonel Glenn Road
Little Rock, Arkansas

City of Little Rock
Little Rock Parks & Recreation
500 W. Markham, Rm 108
Little Rock, Arkansas 72201
T # 501.371.4770
F # 501.371.6832
www.lrpr.org

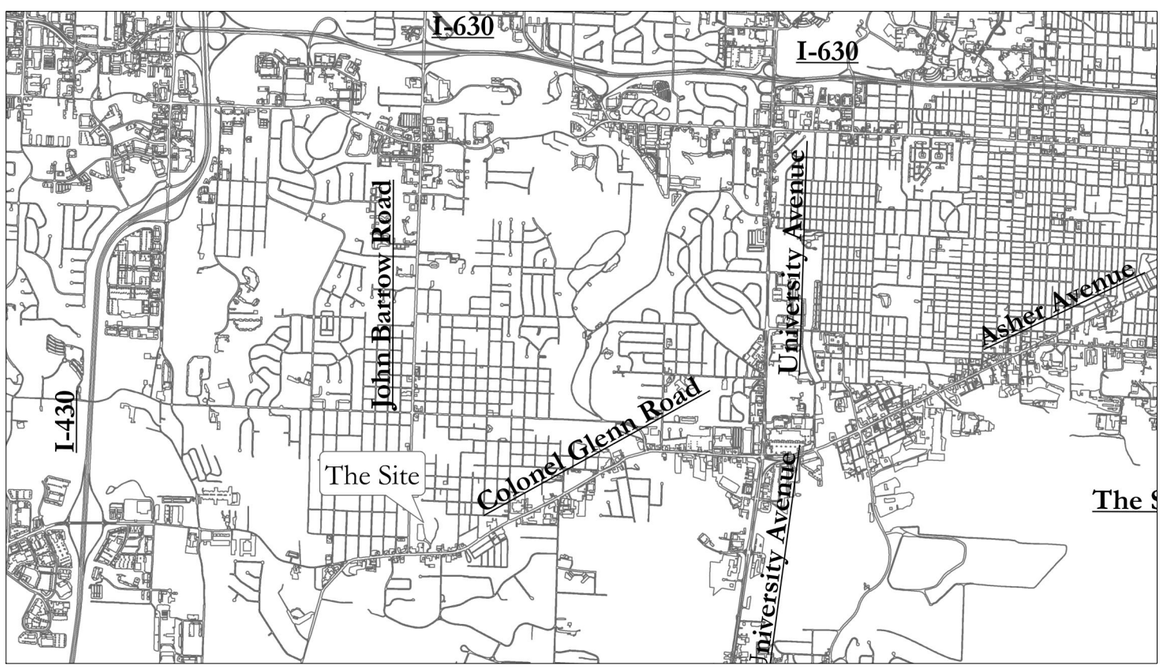

Vicinity Map

NTS

Date: 3/17/15

Sheet No:

T1.0

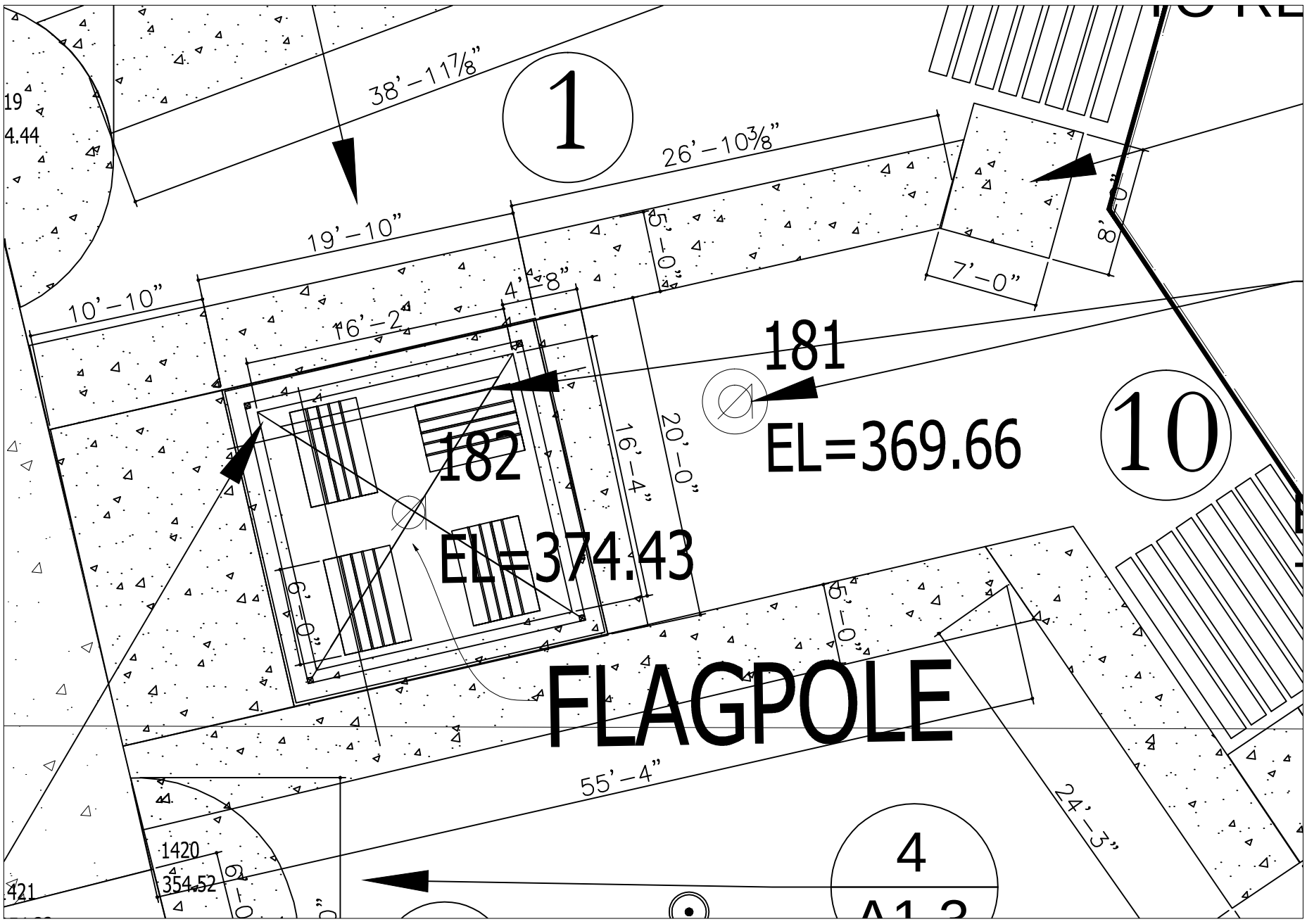

1 SITE PLAN - PAVILION
SCALE: 1" = 100'

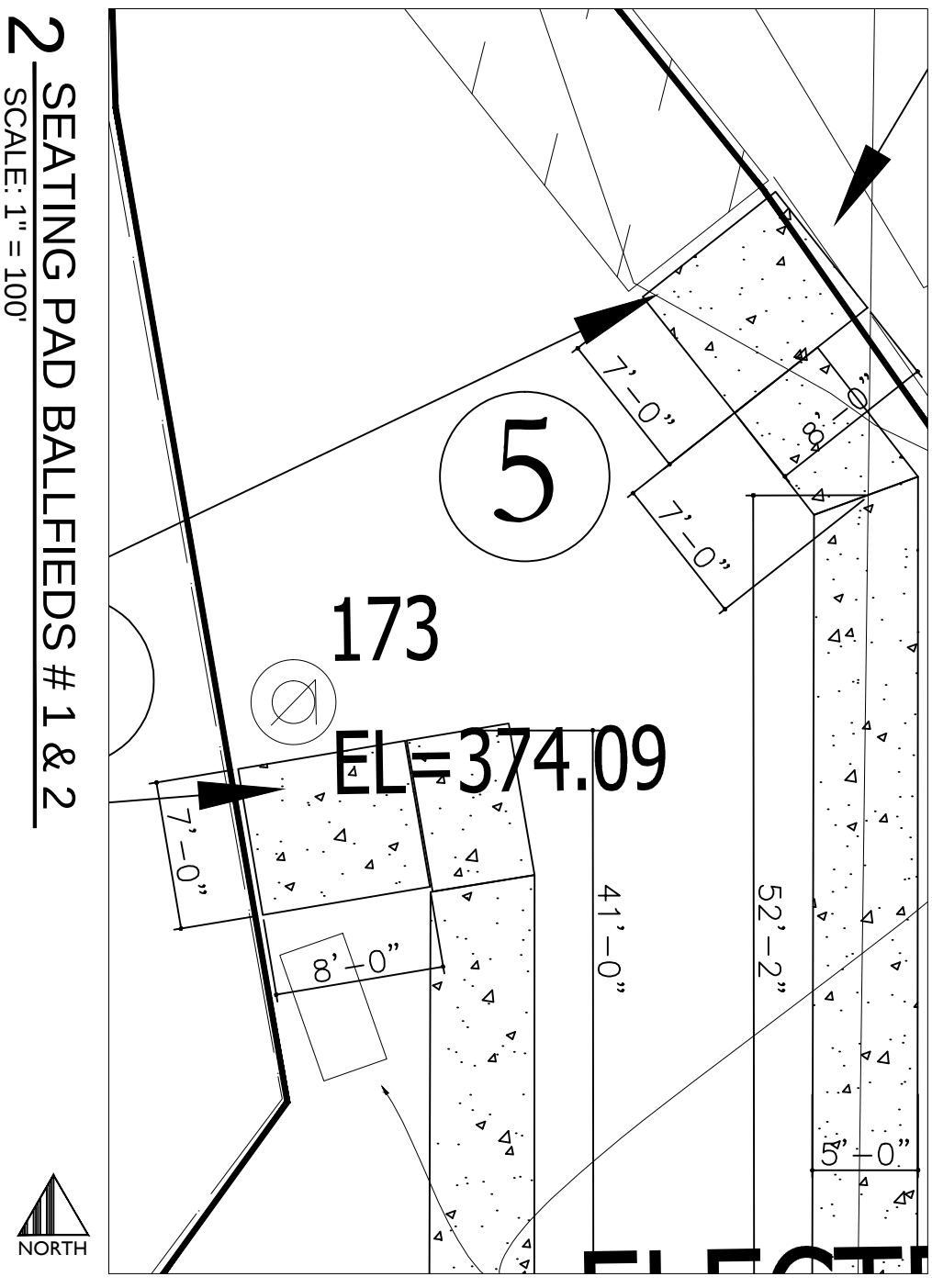

2 SEATING PAD BALLFIELDS # 1 & 2
SCALE: 1" = 100'

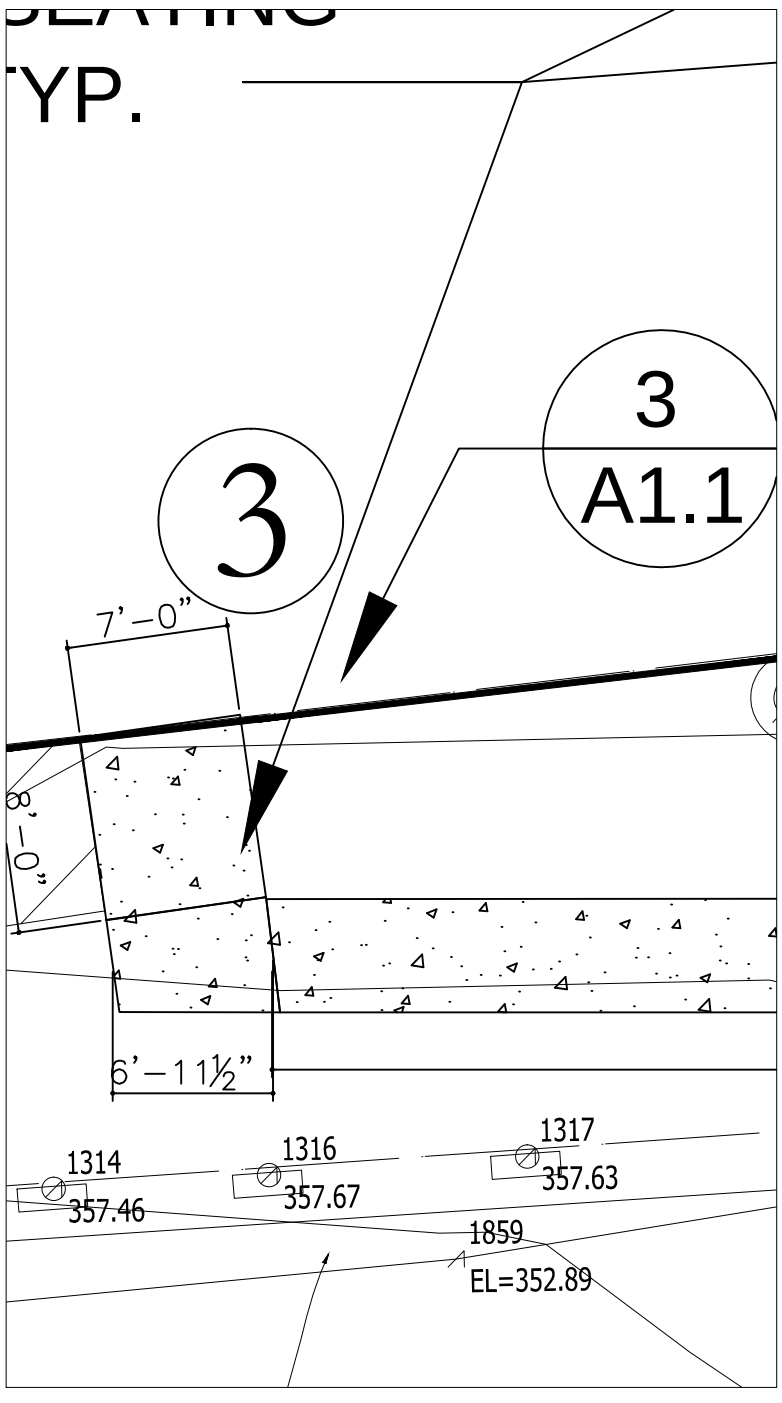

3 SEATING PAD BALLFIELDS # 1 & 2
SCALE: 1" = 100'

City of Little Rock
Little Rock Parks & Recreation
500 W. Markham, Rm 108
Little Rock, Arkansas 72201
T # 501.371.4770
F # 501.371.6832
www.lrpr.org

LITTLE ROCK Parks & Recreation
"A City for A Park"

West Central Sports Complex

Site Layout - Ball Field Walks & Seating Pads

Sheet Title: DETAILS

Sheet Scale: NOTED

Date: 3/17/15

Sheet No: A1.1

1 SITE PLAN - OVERALL
SCALE: 1" = 100'

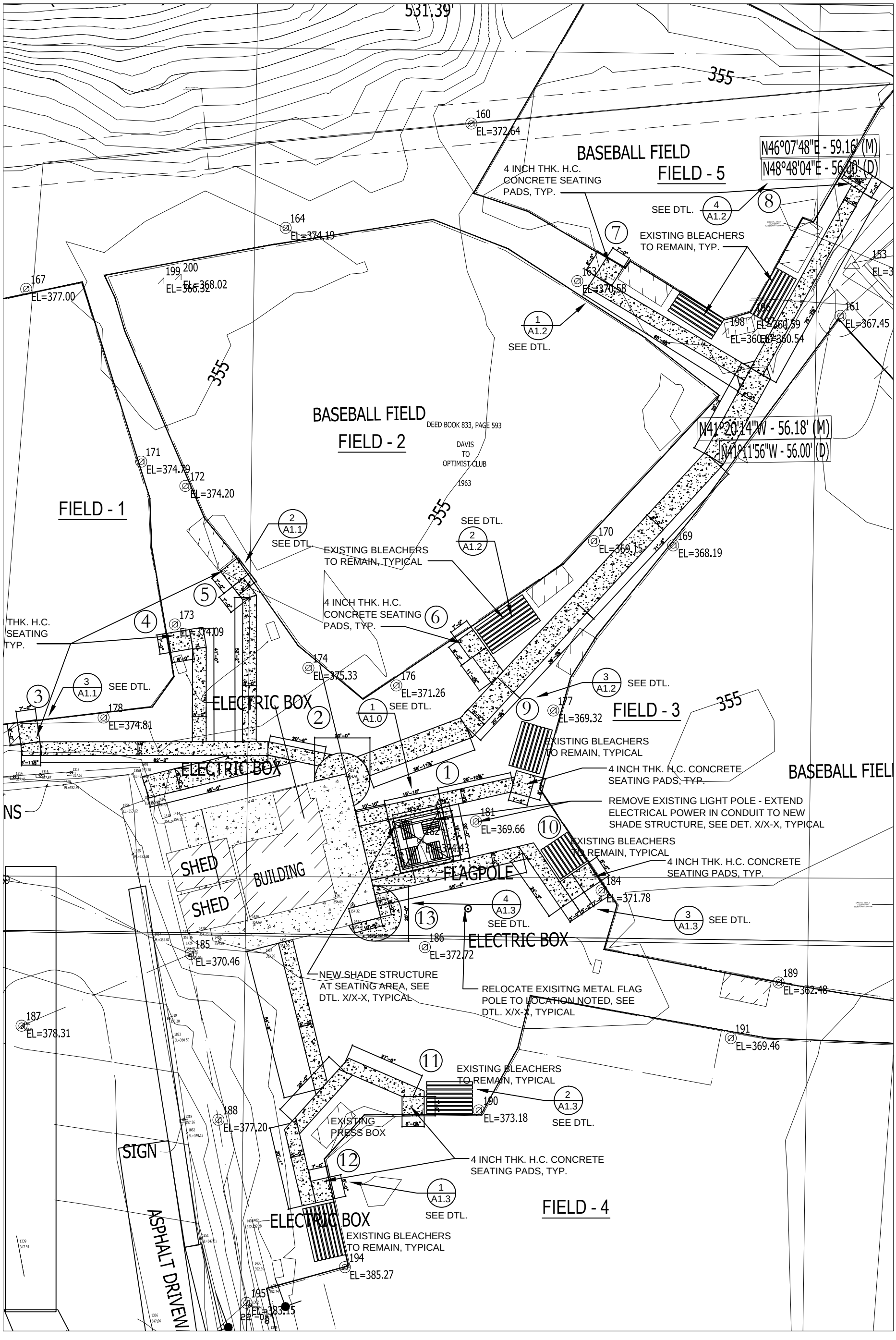

Sheet Title: SITE PLAN OVERALL	Sheet Scale: 1" = 400'	Date: 3/17/15	Sheet No: A1.0

West Central Sports Complex

Site Layout - Ball Field Walks & Seating Pads

City of Little Rock
Little Rock Parks & Recreation
500 W. Markham, Rm 108
Little Rock, Arkansas 72201
T # 501.371.4770
F # 501.371.6832
www.lrpr.org

Little Rock Parks & Recreation
"A City for A Park"

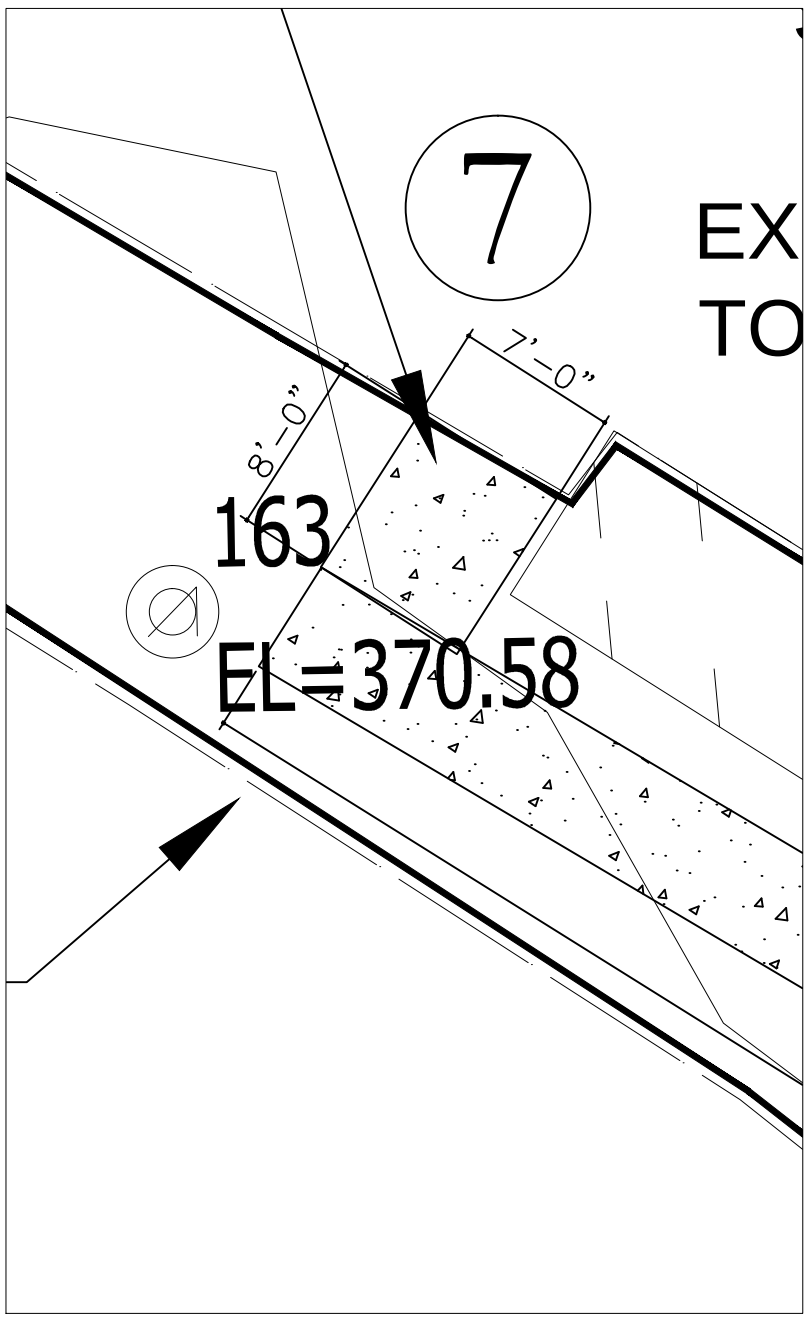

1 SEATING PAD BALLFIED # 5
SCALE: 1" = 100'

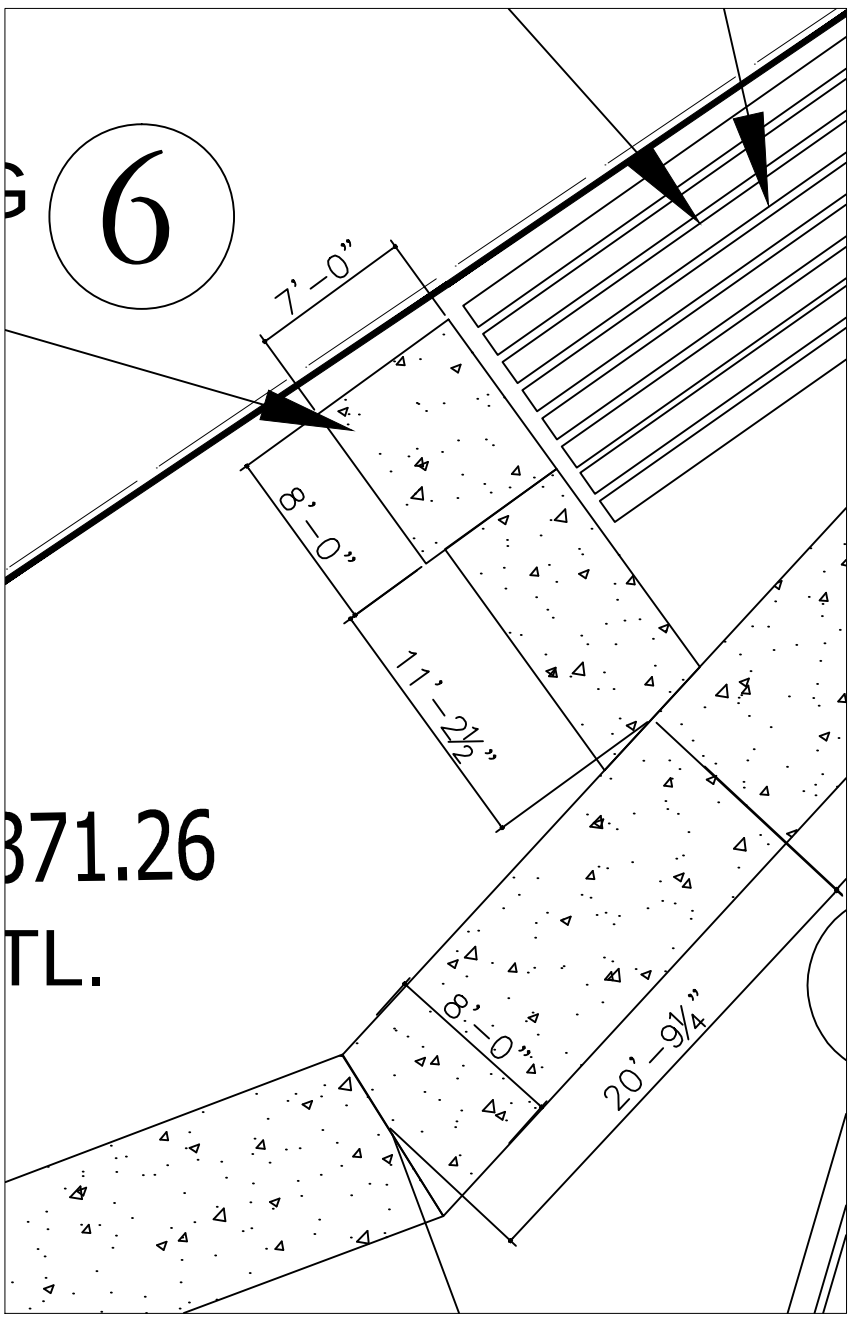

2 SEATING PAD BALLFIED # 2
SCALE: 1" = 100'

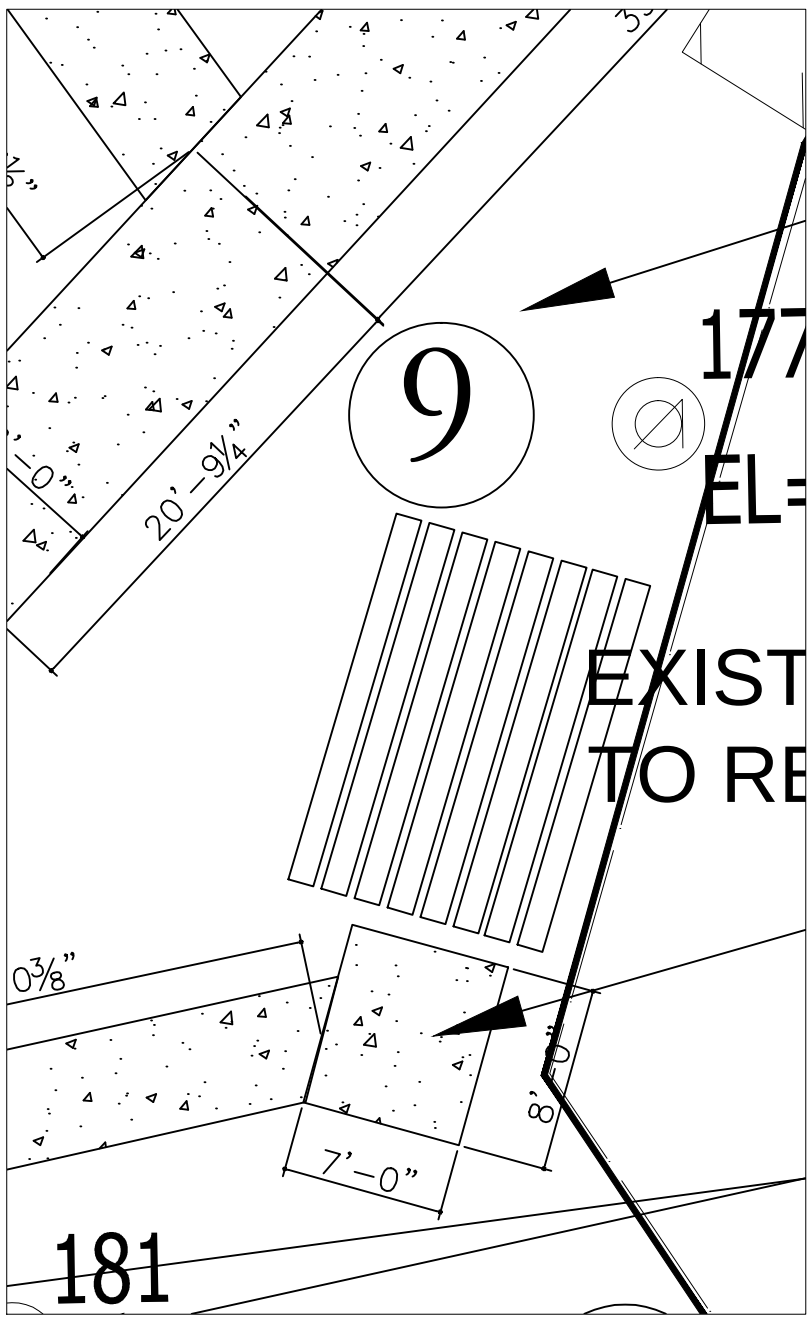

3 SEATING PAD BALLFIED # 3
SCALE: 1" = 100'

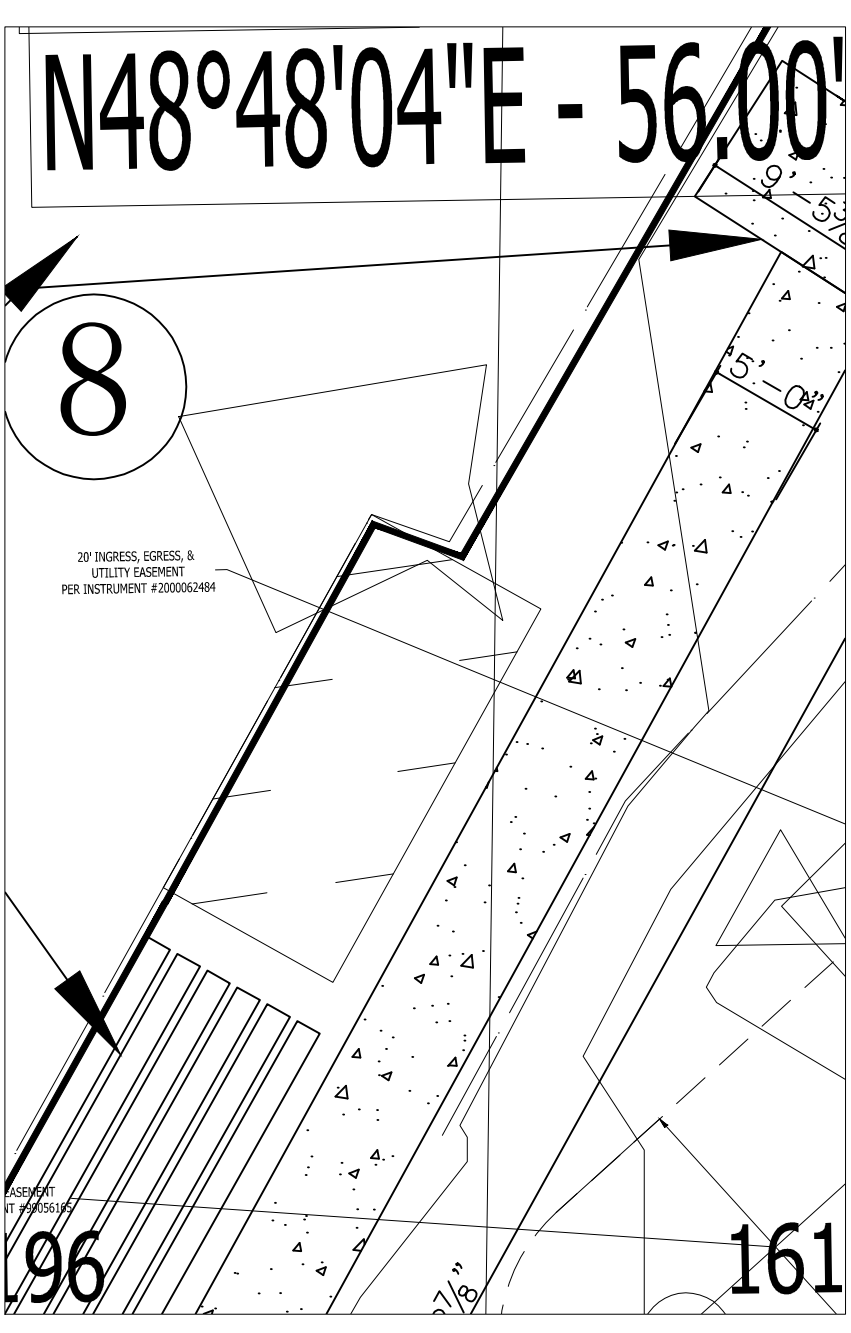

4 SEATING PAD BALLFIED # 5
SCALE: 1" = 100'

City of Little Rock
Parks & Recreation
"A City for A Park"

City of Little Rock
Little Rock Parks & Recreation
500 W. Markham, Rm 108
Little Rock, Arkansas 72201
T # 501.371.4770
F # 501.371.6832
www.lrpr.org

West Central Sports Complex

Site Layout - Ball Field Walks & Seating Pads

Sheet Title: DETAILS

Sheet Scale: NOTED

Date: 3/17/15

Sheet No: A1.2

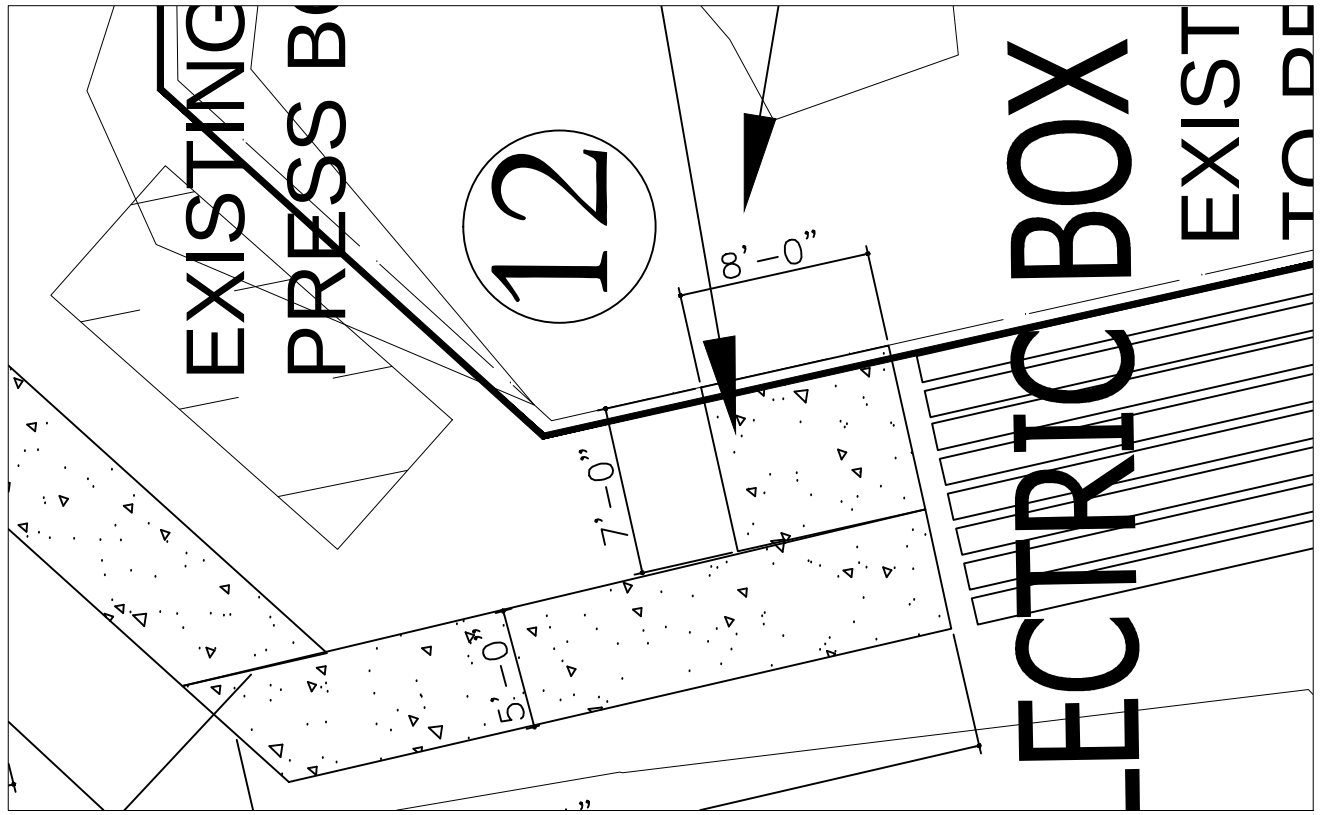

1 SEATING PAD BALLFIED # 4
SCALE: 1/8 " = 1'- 0"

NORTH

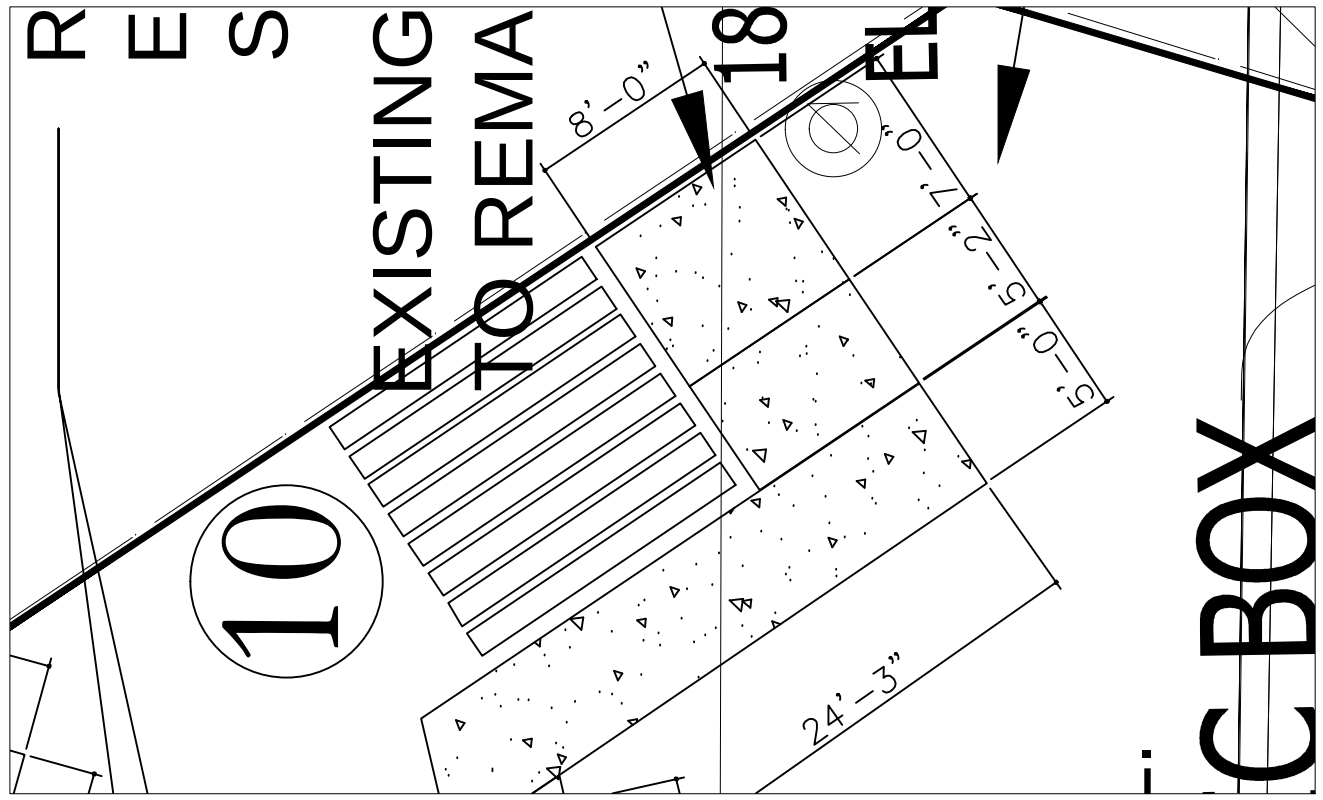

3 SEATING PAD BALLFIED # 3
SCALE: 1/8 " = 1'- 0"

NORTH

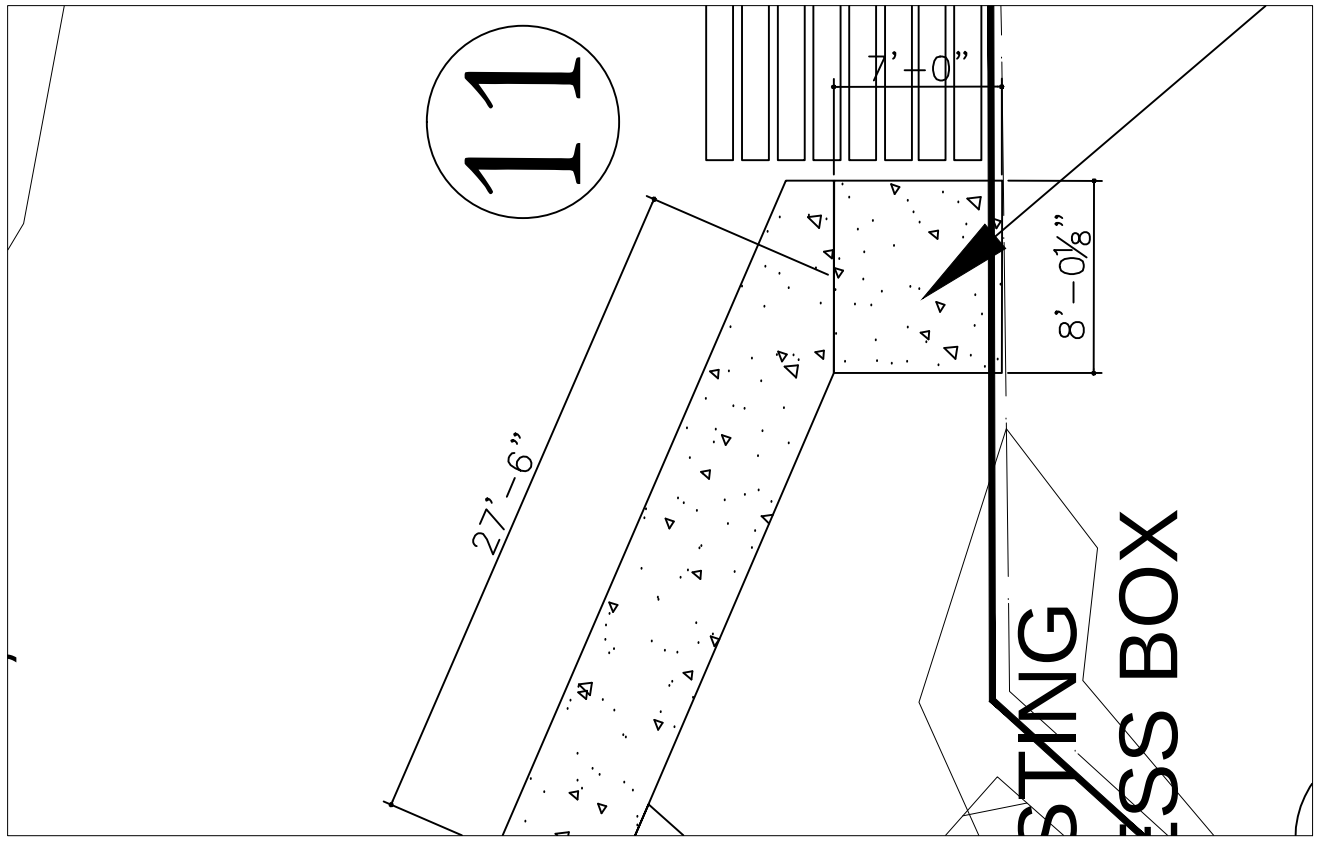

2 SEATING PAD BALLFIED # 4
SCALE: 1/8 " = 1'- 0"

NORTH

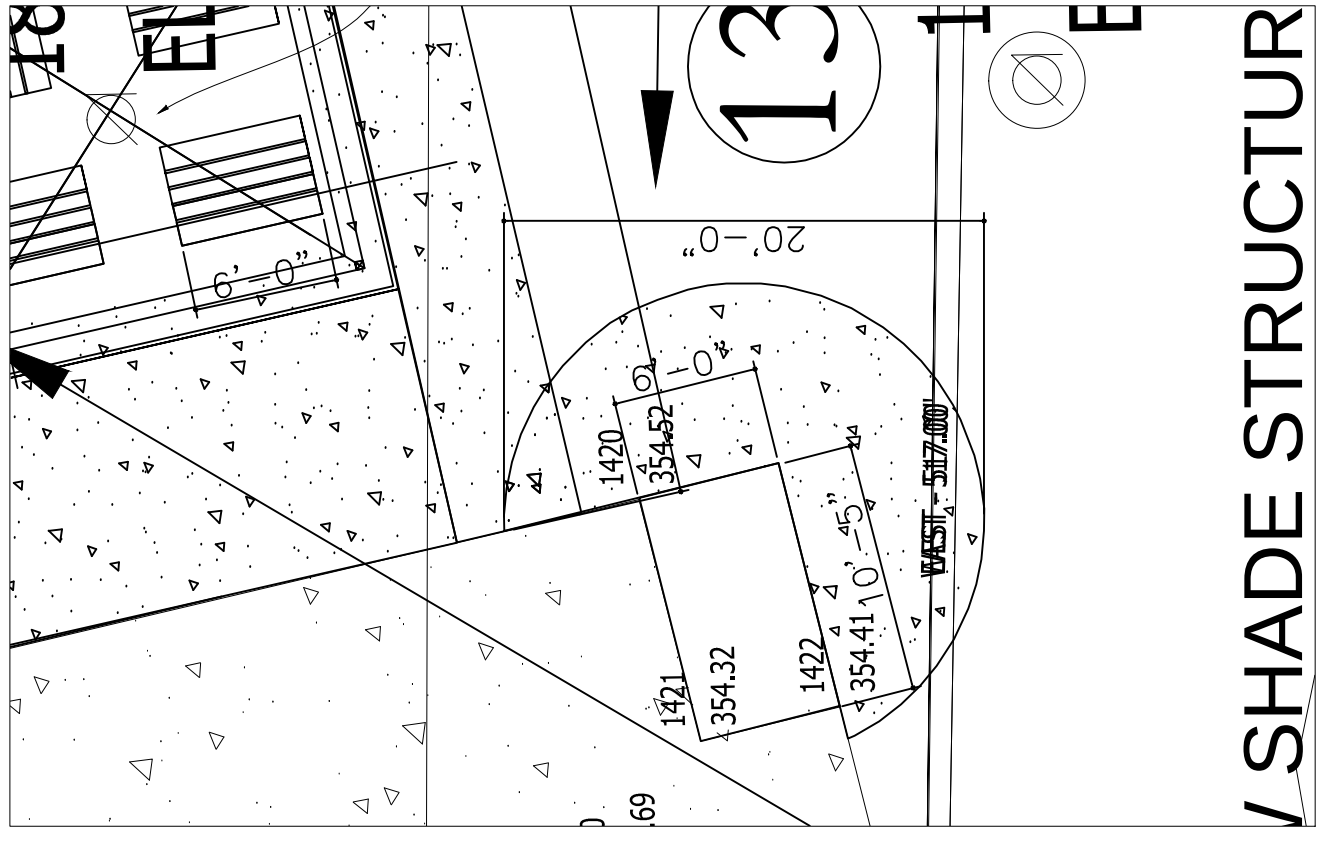

4 PAVILION ACCESS PADS
SCALE: 1/8 " = 1'- 0"

NORTH

LITTLE ROCK Parks & Recreation
"A City In A Park"

City of Little Rock
Little Rock Parks & Recreation
500 W. Markham, Rm 108
Little Rock, Arkansas 72201
T # 501.371.4770
F # 501.371.6832
www.lrpr.org

West Central Sports Complex

Site Layout - Ball Field Walks & Seating Pads

Sheet Title:
DETAILS

Sheet Scale:
NOTED

Date: 3/17/15

Sheet No:
A1.3

1 SITE PLAN @ PAVILION

SCALE: 1/4" = 1'- 0"

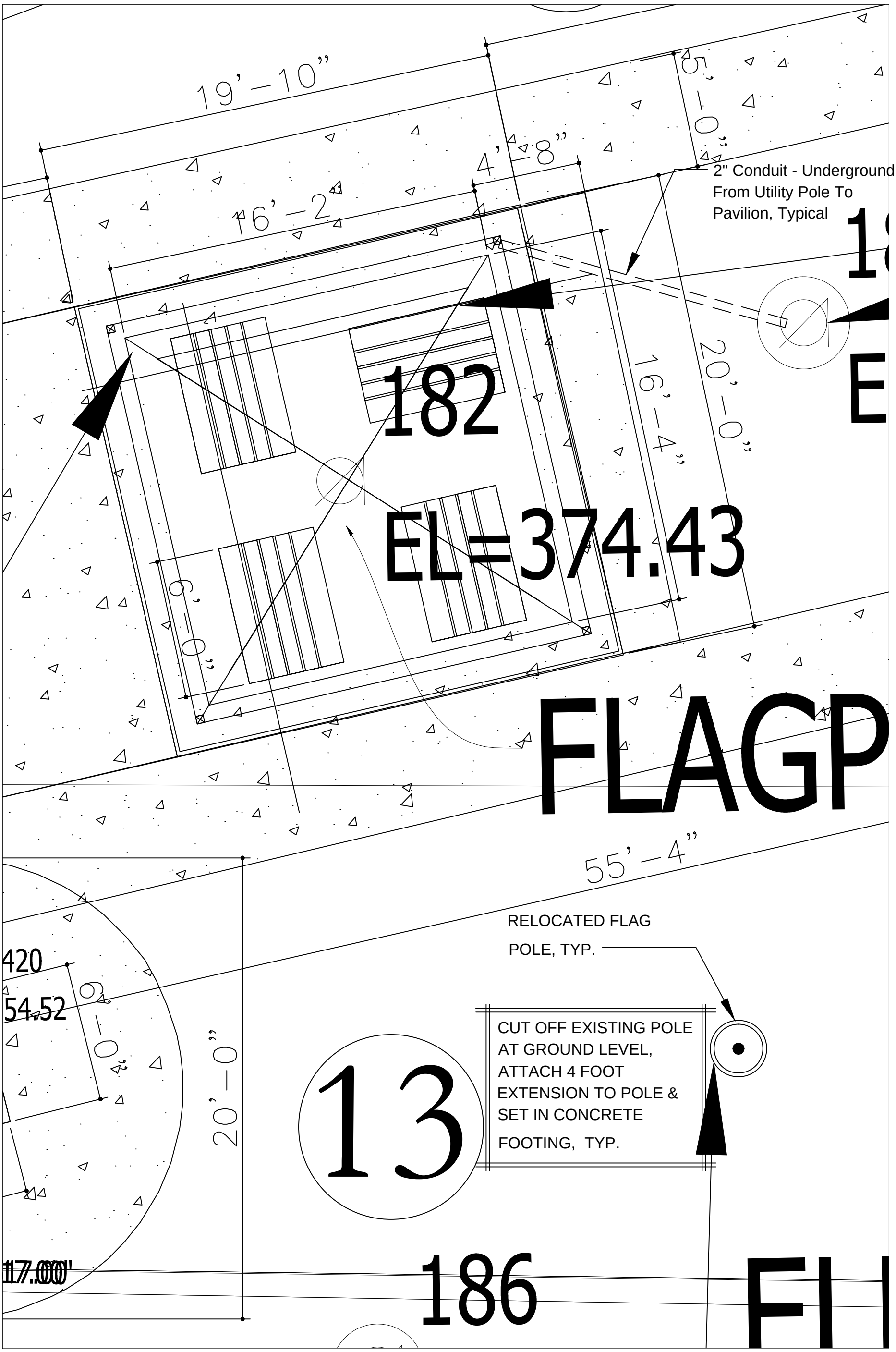

LITTLE ROCK
Parks & Recreation
"A City In A Park"

City of Little Rock
Little Rock Parks & Recreation
500 W. Markham, Ron 108
Little Rock, Arkansas 72201
T # 501.371.4770
F # 501.371.6832
www.lrpr.org

West Central Sports Complex

Floor Plan @ Pavilion

Sheet Title: FLOOR PLAN @ PAVILION

Sheet Scale: NOTED

Date: 3/17/15

Sheet No: A1.4

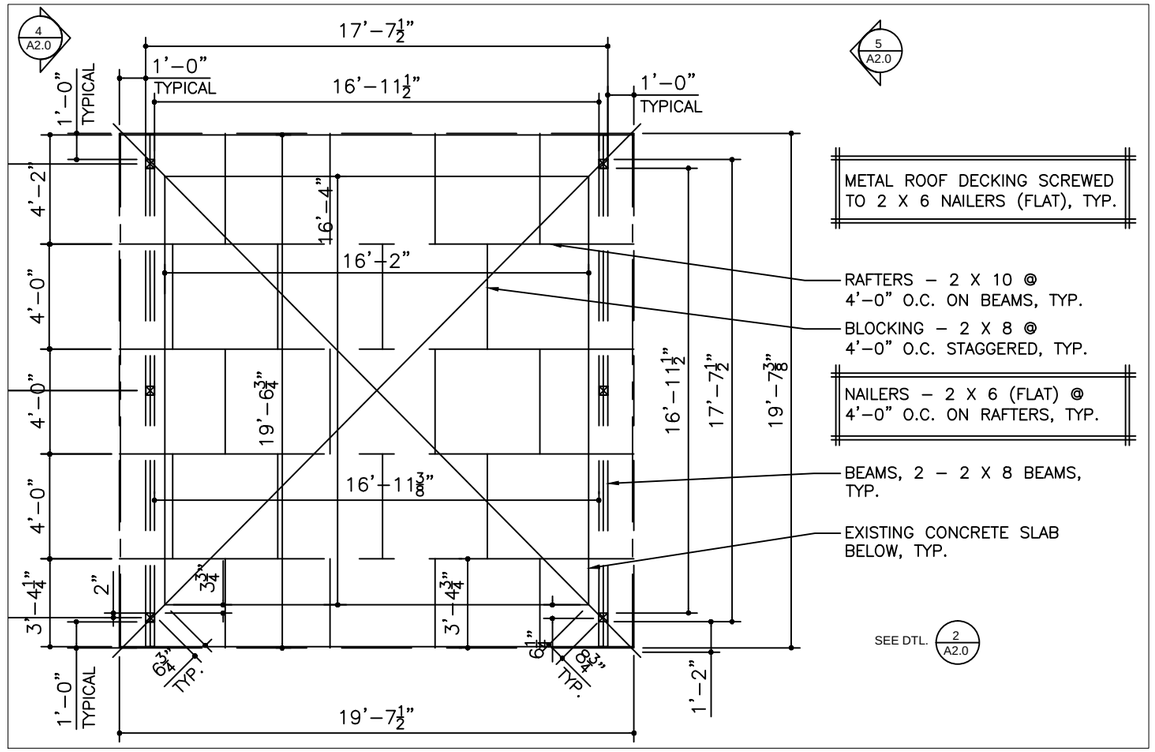

1 SECTION/ELEVATION

SCALE: 1/4" = 1'- 0"

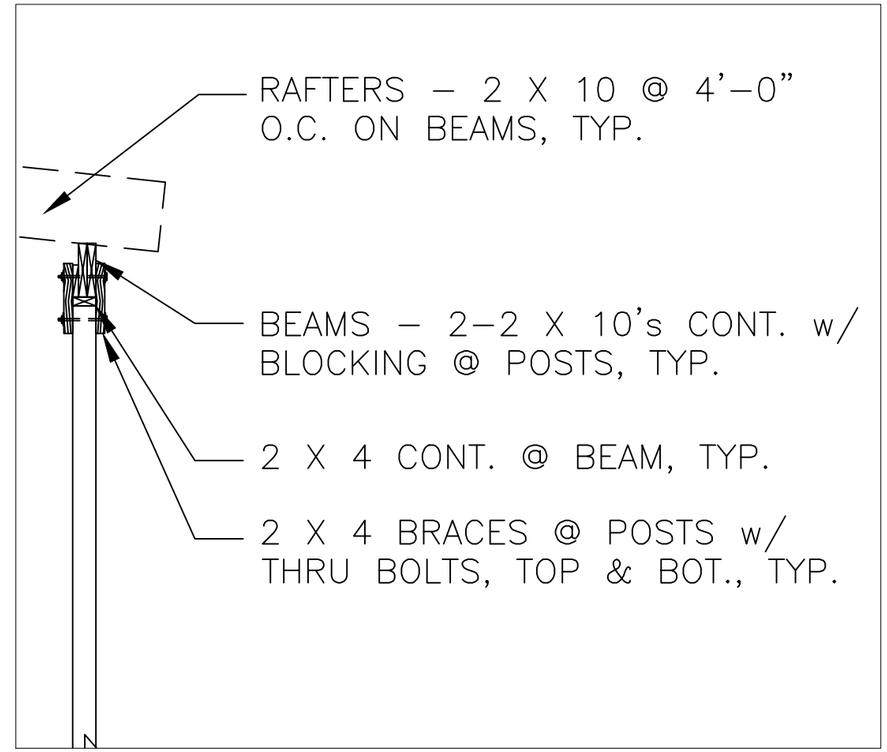

2 POST & BEAM DETAIL

SCALE: 1/2" = 1'- 0"

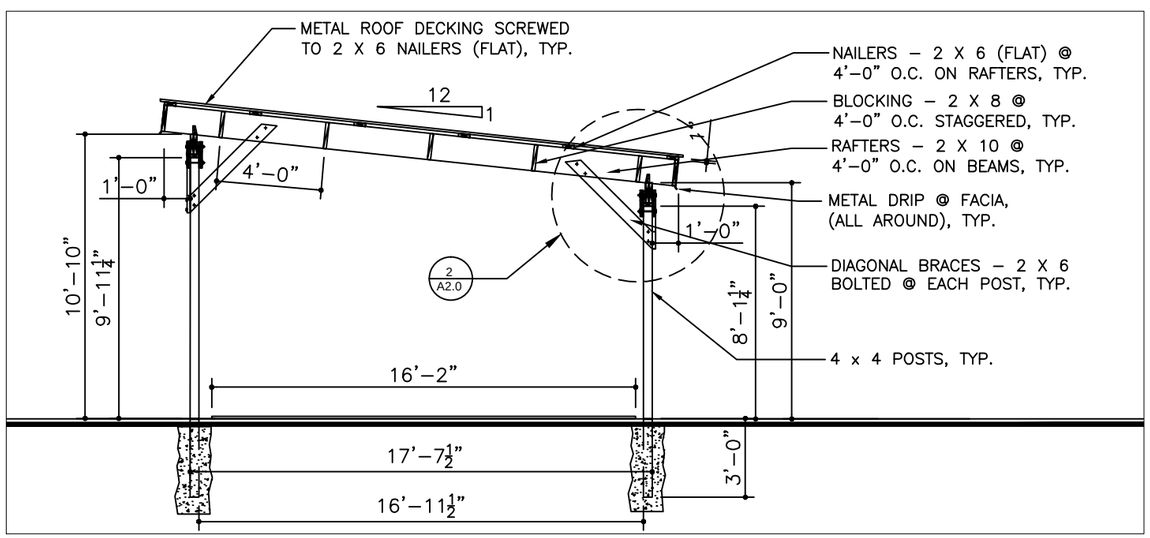

3 SECTION/ELEVATION

SCALE: 1/4" = 1'- 0"

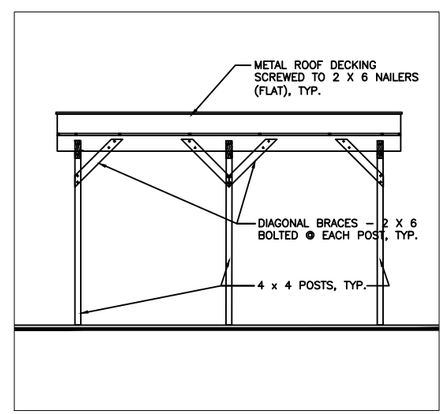

4 SOUTH ELEVATION

SCALE: 1/8" = 1'- 0"

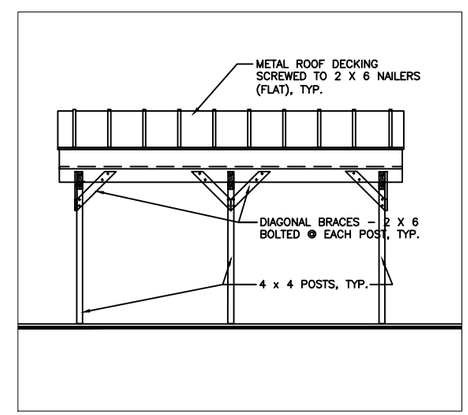

5 NORTH ELEVATION

SCALE: 1/8" = 1'- 0"

City of Little Rock
Little Rock Parks & Recreation
500 W. Markham, Rm 108
Little Rock, Arkansas 72201
T # 501.371.4770
F # 501.371.6832
www.lrpr.org

West Central Sports Complex

Concrete Walks, H. C. Seating Pads & Pavilion

8616 Colonel Glenn Road
Little Rock, Arkansas

Sheet Title:
PAVILION FLOOR & FRAMING PLAN

Sheet Scale:
NOTED

Date: 3/17/15

Sheet No:
A2.0