STANDARD DETAILS

STREET AND DRAINAGE FACILITIES IMPROVEMENTS

APRIL 2014

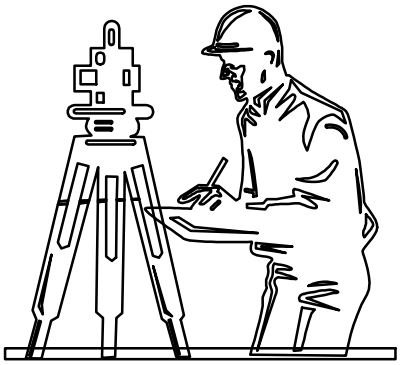

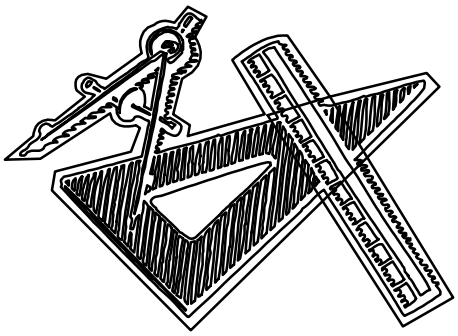

STANDARD DETAILS INDEX

TITLE	PW
CURB INLET:	
SINGLE WING	*PW-1*
INET W/ BACK OPENING	*PW-1A*
CURB INLET	*PW-1B*
HEAD WALL	*PW-2*
GUTTER DEPRESSION	*PW-3*
CURB GRATE INLET (SINGLE)	*PW-4*
CURB GRATE INLET (DOUBLE)	*PW-5*
CURB INLET/DEPRESSED TOP	*PW-6*
AREA INLET	*PW-6A*
JUNCTION BOX/CURB INLET	*PW-7*
JUNCTION BOX/CURB INLET	*PW-8*
THROAT OPENING (NOT IN RADIUS)	*PW-9*
THROAT OPENING (IN RADIUS)	*PW-10*
JUNCTION BOX IN ROADWAY	*PW-11*
CURB INLET STEPS	*PW-12*
MANHOLE:	
MANHOLE FRAME AND COVER	*PW-13*
TOP ADJUSTMENT-MANHOLE	*PW-14*
DRAINAGE STRUCTURE ACCESSORIES:	
SADDLE BRANCH WITH RISER	*PW-15*
SADDLE BRANCH	*PW-16*
MISCELLANEOUS:	
MAILBOX INSTALLATION:	*PW-17*
PROJECT KIOSK	*PW-18*
SUB-DRAIN DETAIL	*PW-19*
HANDRAIL DETAIL (ALTERNATE)	*PW-20*
HANDRAIL DETAIL	*PW-21*
TYPICAL SECTIONS:	
RESIDENTIAL STREET	*PW-22*
COLLECTOR OR COMMERCIAL STREET	*PW-23*
ARTERIAL STREET	*PW-24*
UTILITY SPECIFICATIONS:	
UTILITY CUT-EXISTING STREET	PW-25
UTILITY CUT-UNDER NEW CONSTRUCTION	PW-26
TRENCH BACKFILL REQUIREMENTS	*PW-27*
CURB DETAILS:	
CLASS 1 & CLASS 2	*PW-28*
CLASS 3 & CLASS 4	*PW-29*
DRIVEWAY DETAILS:	
RESIDENTIAL	*PW-30*
RESIDENTIAL	*PW-31*
RESIDENTIAL	*PW-32*
COMMERCIAL	*PW-33*
COMMERCIAL	*PW-34*
ALLEY TURNOUT	*PW-35*

STANDARD DETAILS INDEX

TITLE	**PW**
MAXIMUM DRIVEWAY GRADING:	
DETAIL A	*PW-36*
DETAIL B	*PW-37*
DETAIL C	*PW-38*
DETAIL D	*PW-39*
DETAIL E	*PW-40*
SIDEWALK DETAILS:	
SIDEWALK	*PW-41*
ADJACENT TO CURB (AT GRADE)	*PW-42*
ADJACENT TO CURB (FILL SECTION)	*PW-43*
ADJACENT TO CURB (CUT SECTION)	*PW-44*
ADJACENT TO CURB (FILL SECTION A)	*PW-45*
CROSSOVER BRIDGE	*PW-46*
CROSSOVER BRIDGE	*PW-47*
ACCESS RAMP DETAILS:	
NOTES & RAMP CRITERIA	*PW-48*
TYPE 1	*PW-49*
TYPE 2 & TYPE 4	*PW-50*
TYPE 3	*PW-51*
TYPE 3	*PW-52*
TYPE 5	*PW-53*
RETAINING WALL DETAIL:	
RETAINING WALL DETAIL	*PW-54*
FENCE DETAIL:	
CHAINLINK FENCE DETAIL (RESIDENTIAL)	PW-55
PIPE SLEEVE DETAIL	*PW-56*
WOOD FENCE (WOOD POST)	*PW-57*
WOOD FENCE (METAL POST)	PW-58
BASE FLANGE DETAIL	*PW-59*
EROSION CONTROL :	
GROUTED RIP-RAP	*PW-60*
SLOPE ROUNDING	*PW-61*
GROUTED RIP-RAP AT FLARED END SECTION	*PW-62*
FLARED END SECTION BESIDE STREET	*PW-62A*
TEMPORARY EROSION CONTROL DEVICES	*PW-63*
TEMPORARY EROSION CONTROL DEVICES	*PW-64*
TEMPORARY EROSION CONTROL DEVICES	*PW-65*
TREE PROTECTION	*PW-66*
BARRICADE TYPE 3	*PW-67*

	TITLE		PW–1A
	INLET W/ BACK OPENING FOR SURFACE WATER	Issue Date AUG, 2006	Revision Date DEC, 2012

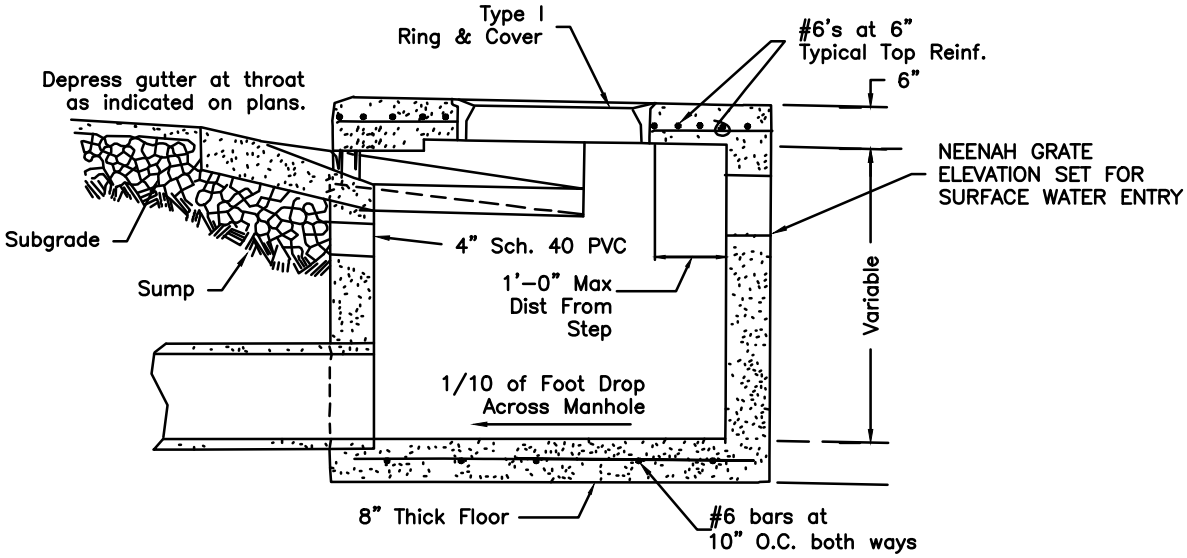

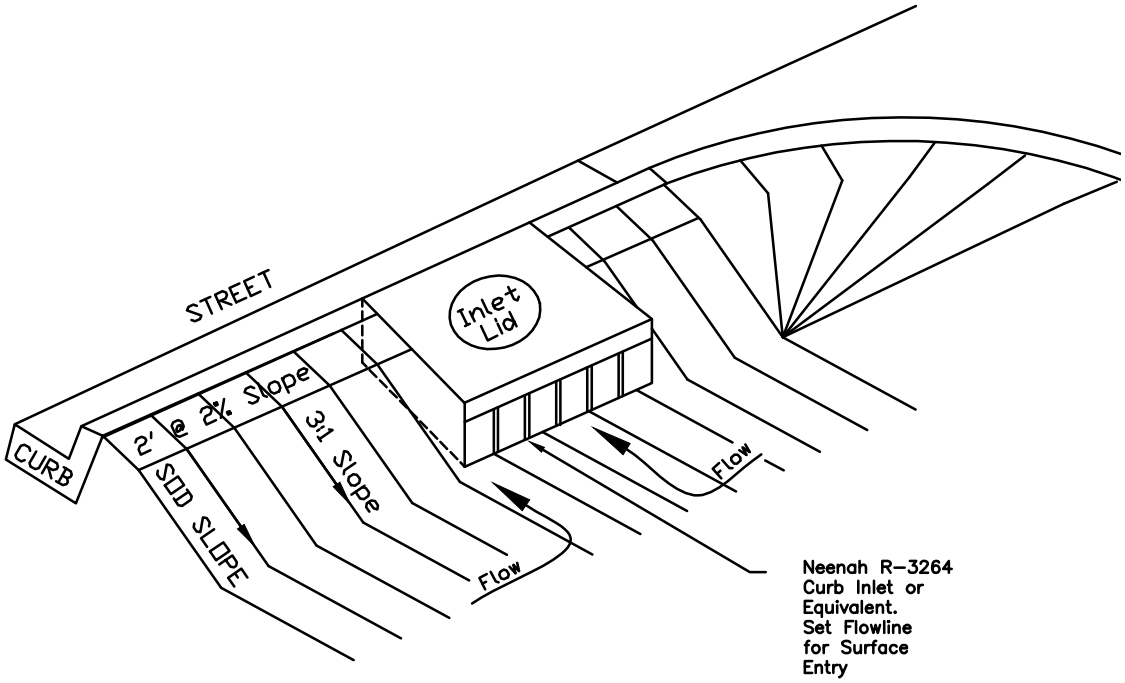

CURB INLET W/ YARD DRAINAGE

	TITLE CURB INLET WITH THROAT EXTENSIONS		PW-1B
		Issue Date AUG, 2006	Revision Date APRIL 2014

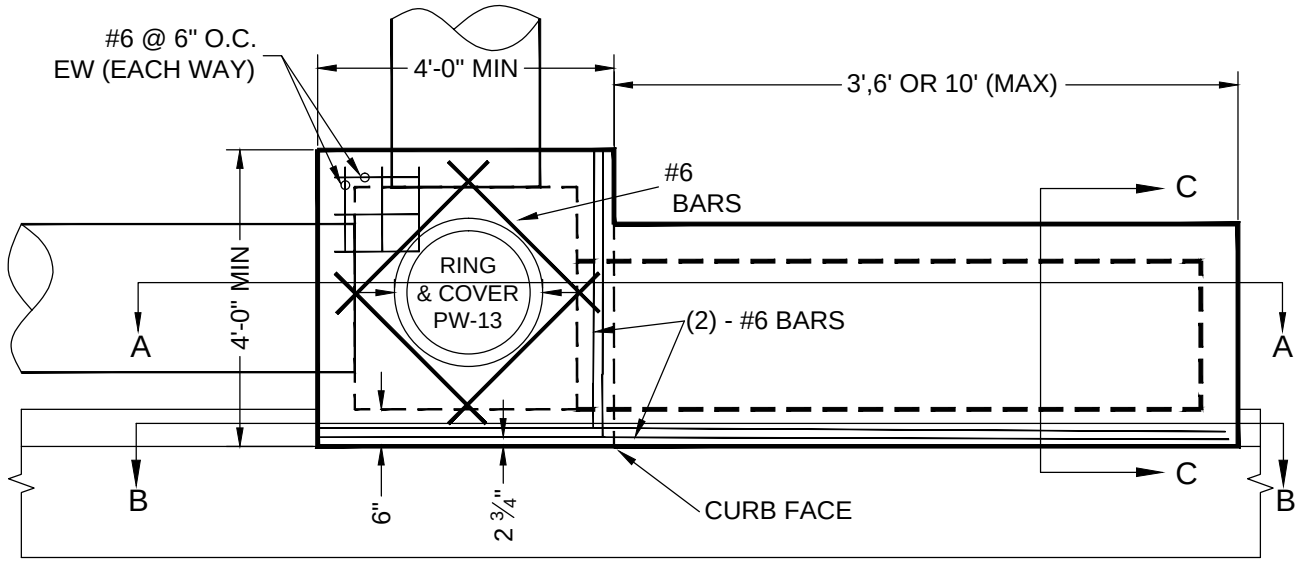

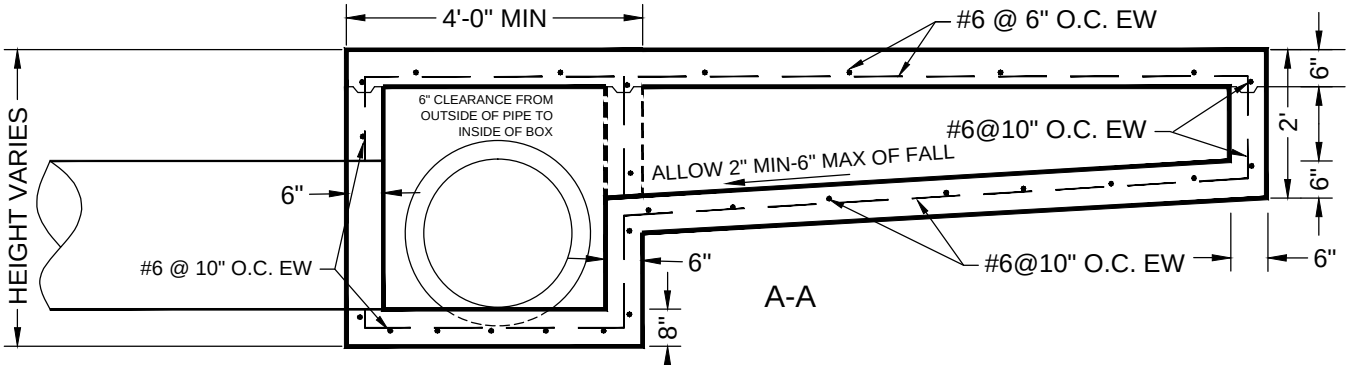

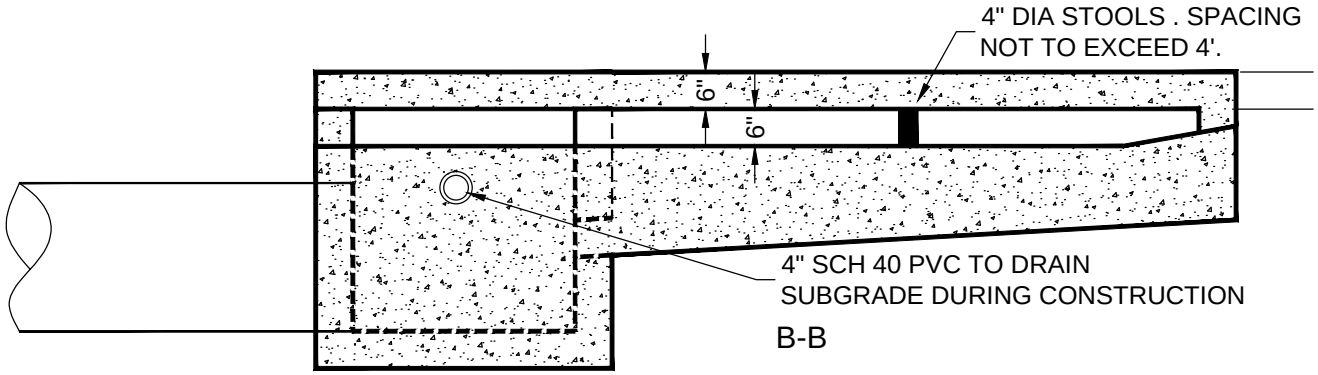

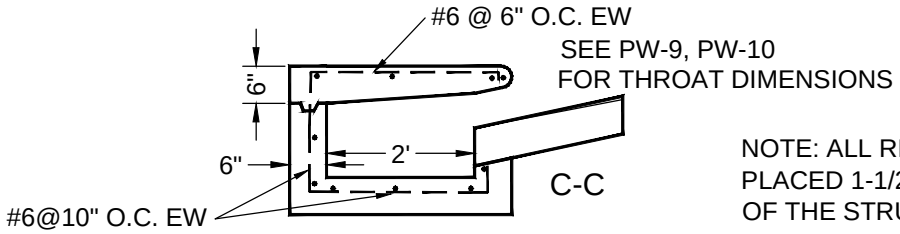

NOTE: ALL REINFORCING TO BE PLACED 1-1/2" CLEAR TO THE INSIDE OF THE STRUCTURE.

	TITLE HEAD WALL DETAIL	Issue Date APRIL, 2014	PW–2 Revision Date

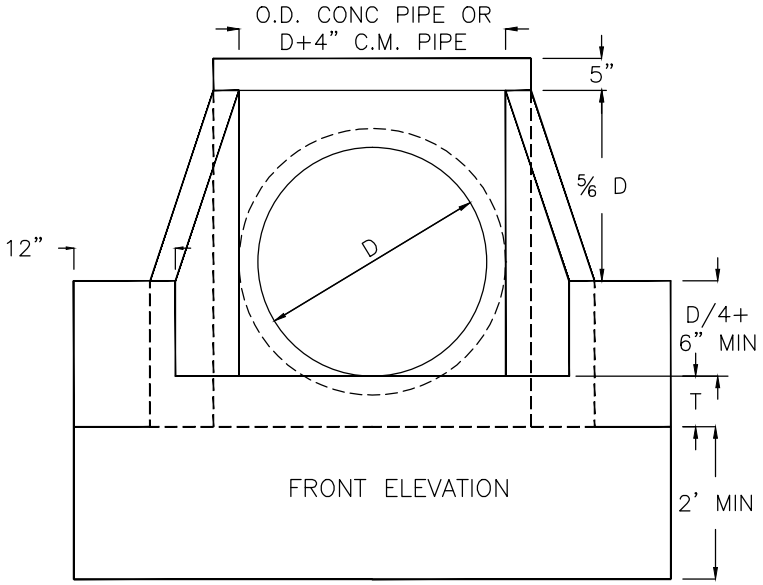

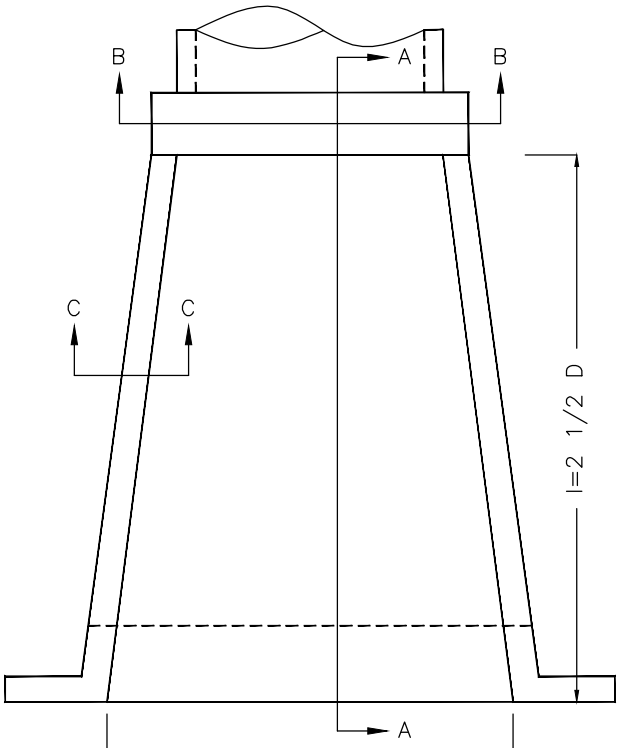

PLAN VIEW

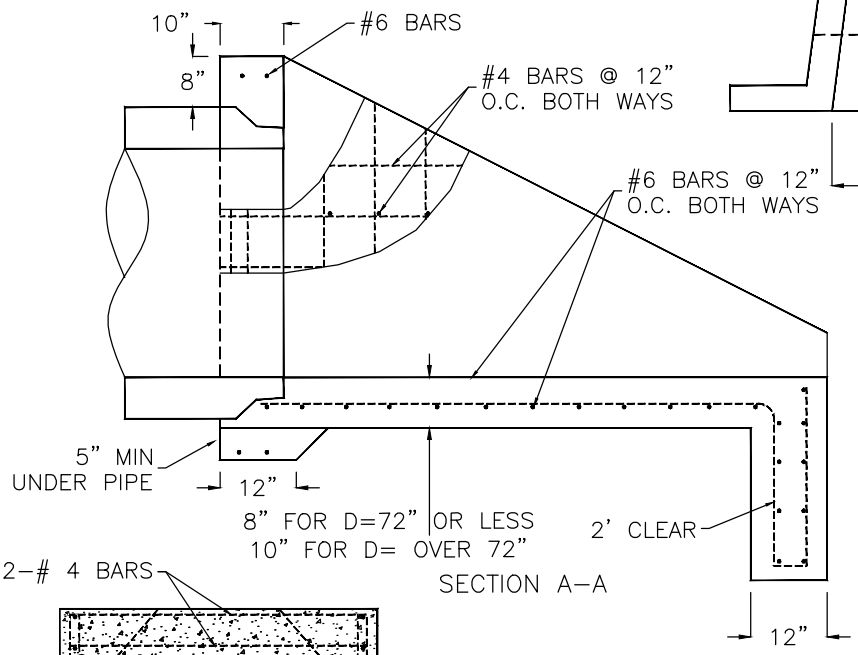

SECTION A–A

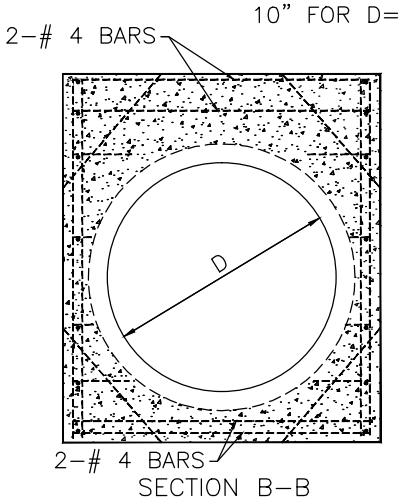

SECTION B–B

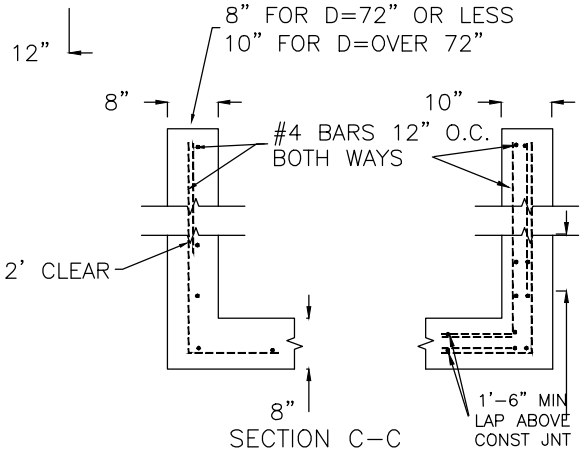

SECTION C–C

	TITLE		
	GUTTER DEPRESSION DETAIL TYPICAL DEPRESSION IS 4"	Issue Date AUG, 2006	PW-3 Revision Date DEC, 2012

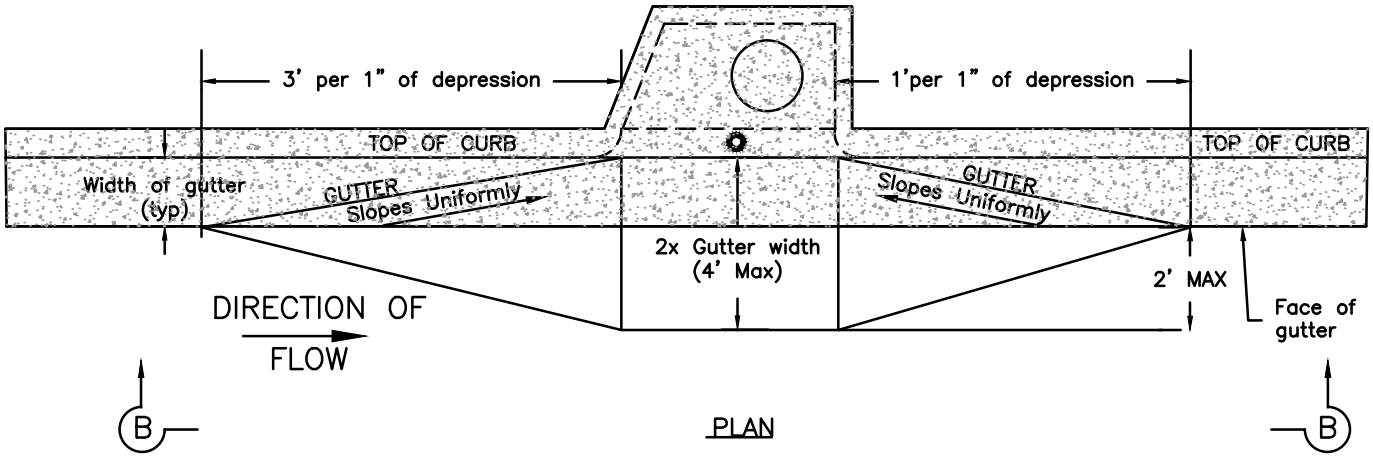

PLAN

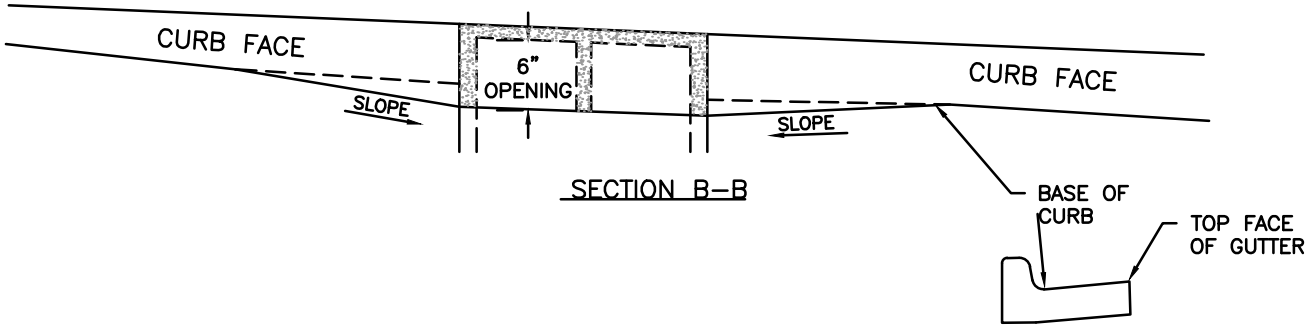

SECTION B-B

NOTE: LOW POINT /(SAG) INLETS : SLOPE SHALL BE 1 FT PER 1" OF DEPRESSION BOTH SIDES

GUTTER DEPRESSION DETAIL

NOTE: THE TOP FACE OF GUTTER SHALL DROP 1/2 OF THE GUTTER DEPRESSION ACROSS THE INLET OPENING.

	TITLE		PW–4
	CURB GRATE INLET (SINGLE) REINFORCED CONCRETE CONSTRUCTION DETAILS TYPE 1	Issue Date AUG, 2006	Revision Date DEC, 2012

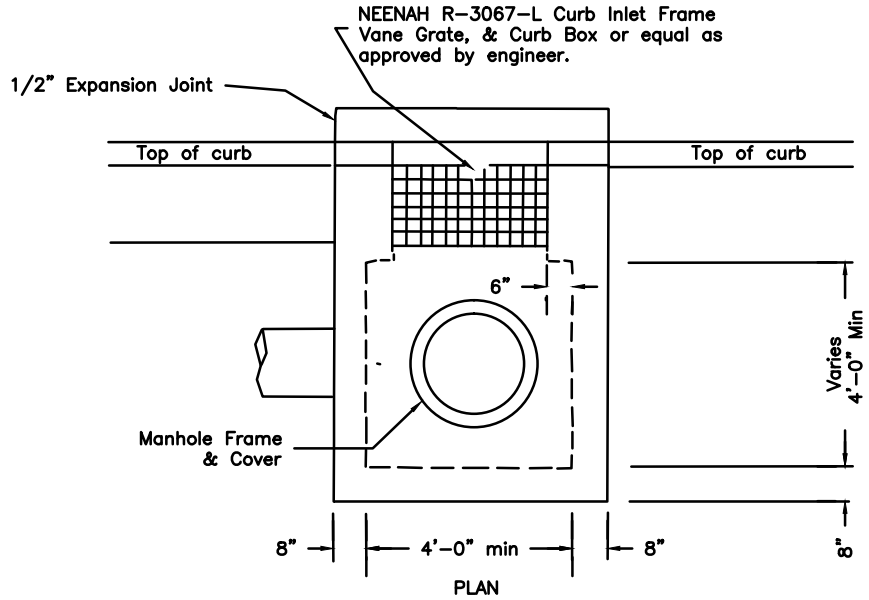

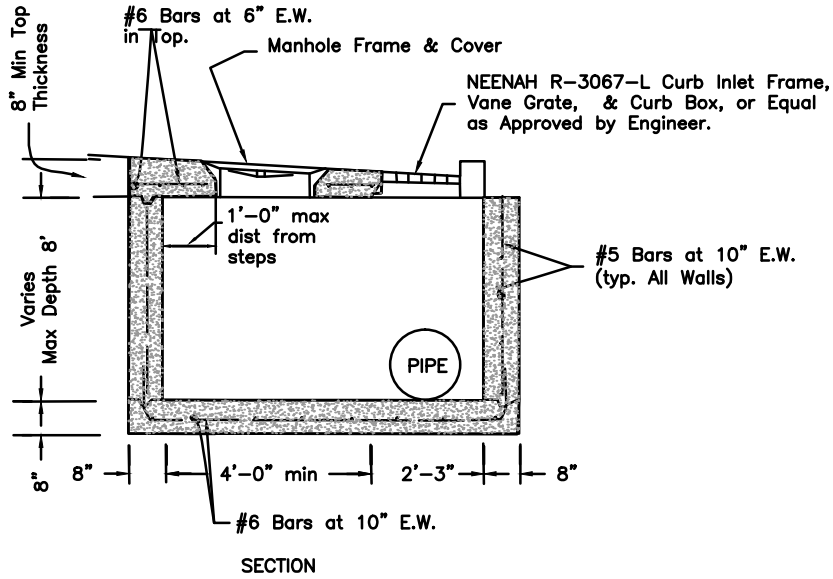

NOTE: Construct manhole steps in all inlets over 3' in depth on most accessible wall (PW–11)

	TITLE		PW–5
	CURB GRATE INLET (DOUBLE) REINFORCED CONCRETE CONSTRUCTION DETAILS	Issue Date AUG, 2006	Revision Date DEC, 2012

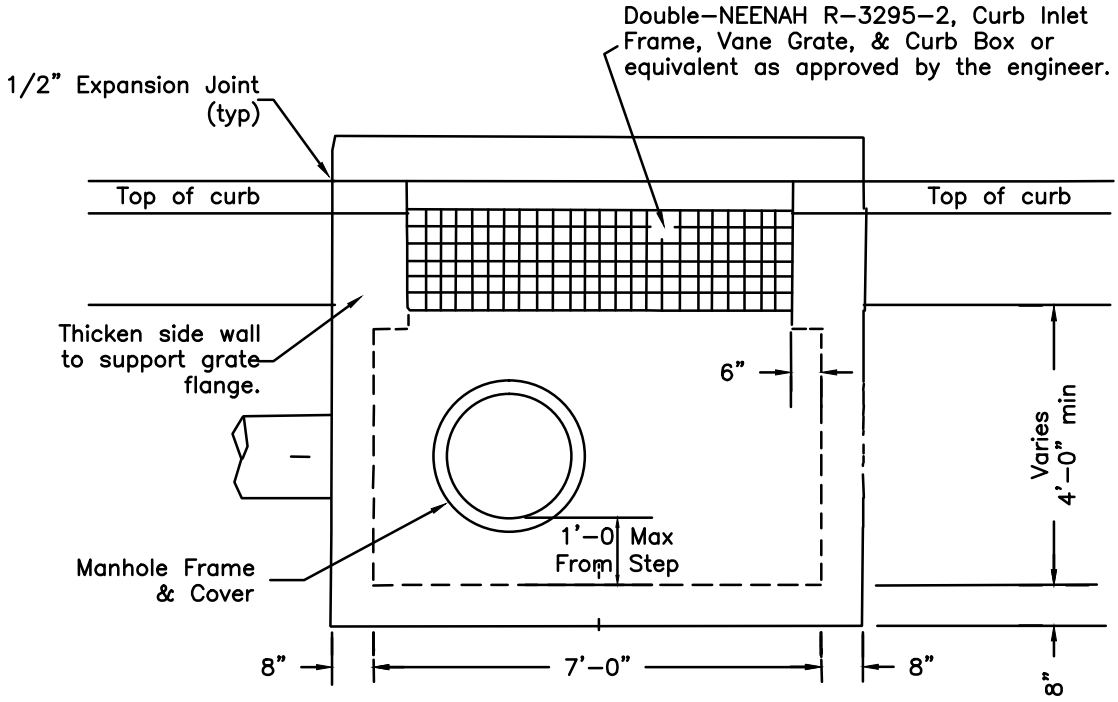

PLAN

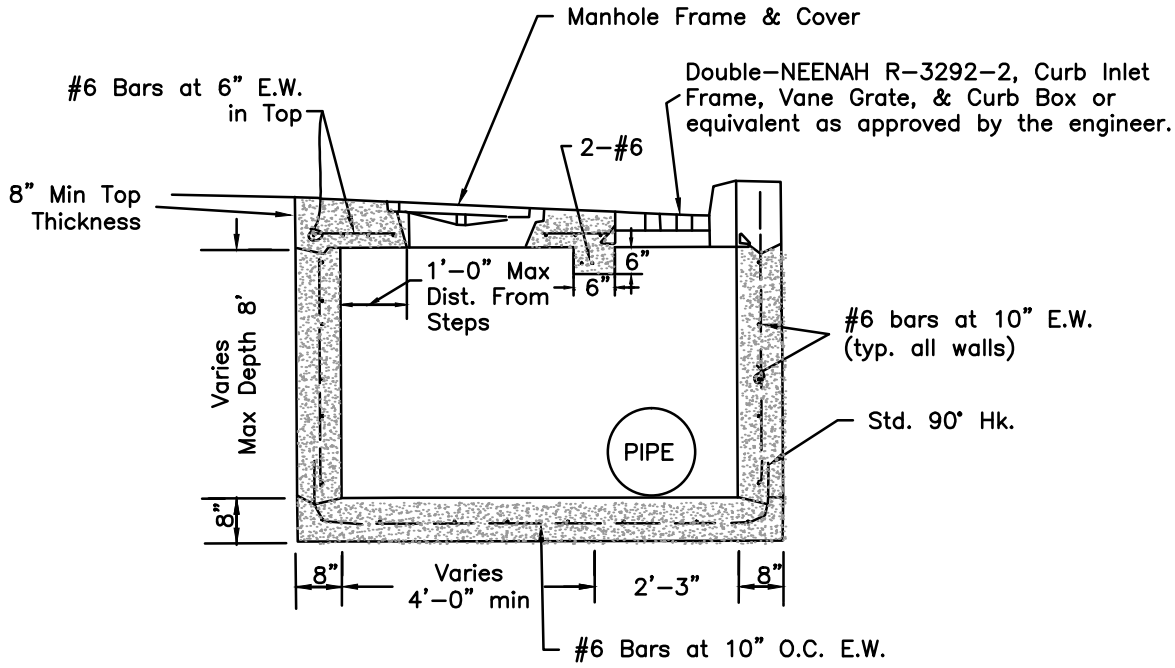

SECTION

NOTE: Construct Manhole Steps in all inlets over 3' in depth on most accessible wall.

	TITLE		PW–6
	DOUBLE WING CURB INLET TOP WITH DEPRESSED TOP (UTILIZED FOR LARGE BOXES)	Issue Date AUG, 2006	Revision Date DEC, 2012

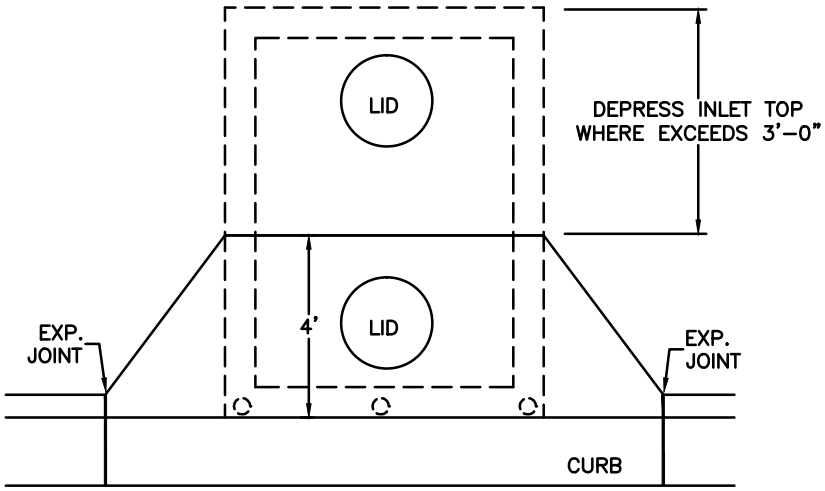

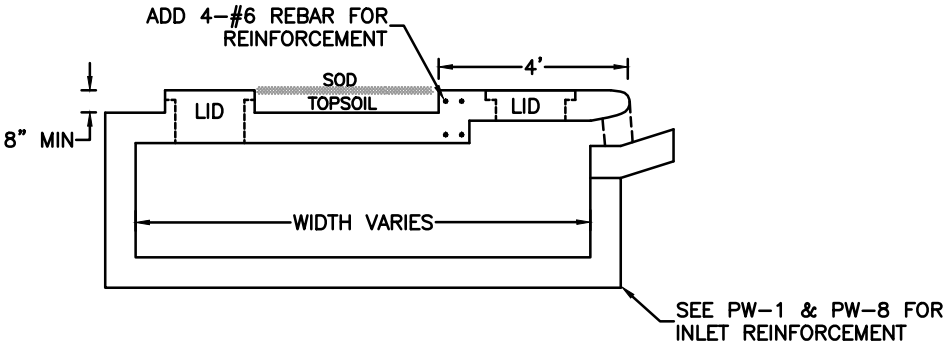

ALTERNATE LID LOCATIONS. INSTALL
LID WHERE ACCESS TO PIPE IS BEST.

	TITLE AREA INLET		PW–6A
		Issue Date APRIL 2014	Revision Date

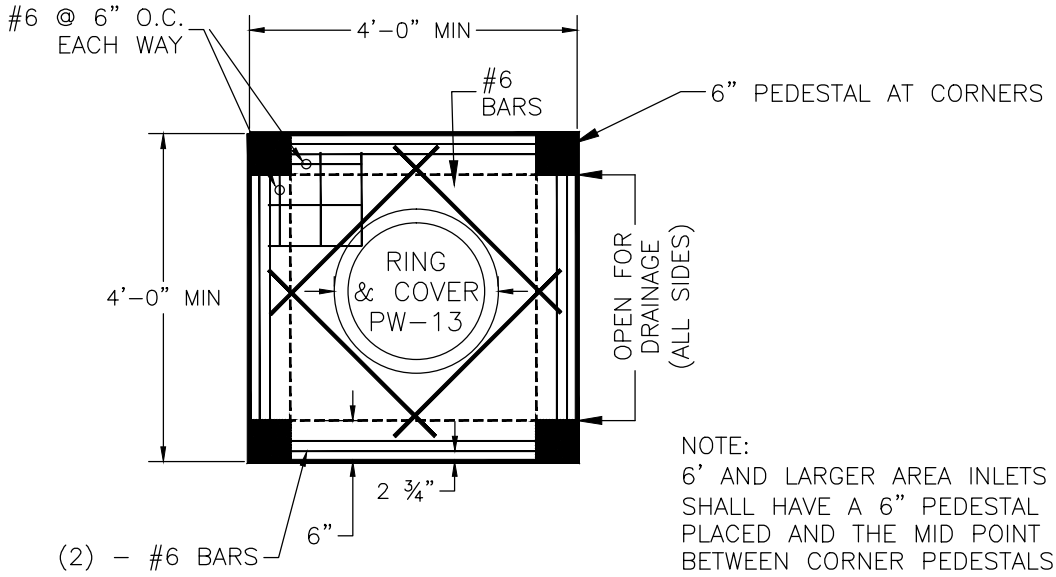

NOTE:
6' AND LARGER AREA INLETS SHALL HAVE A 6" PEDESTAL PLACED AND THE MID POINT BETWEEN CORNER PEDESTALS.

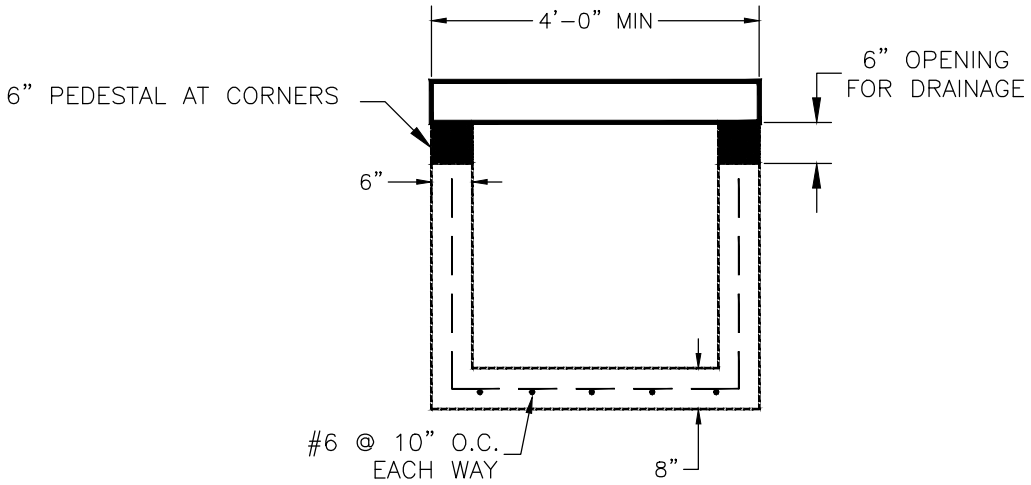

	TITLE		PW–7
	CURB INLET – JUNCTION BOX CIRCULAR MONOLITHIC CONCRETE CONSTRUCTION DETAILS	Issue Date AUG, 2006	Revision Date DEC, 2012

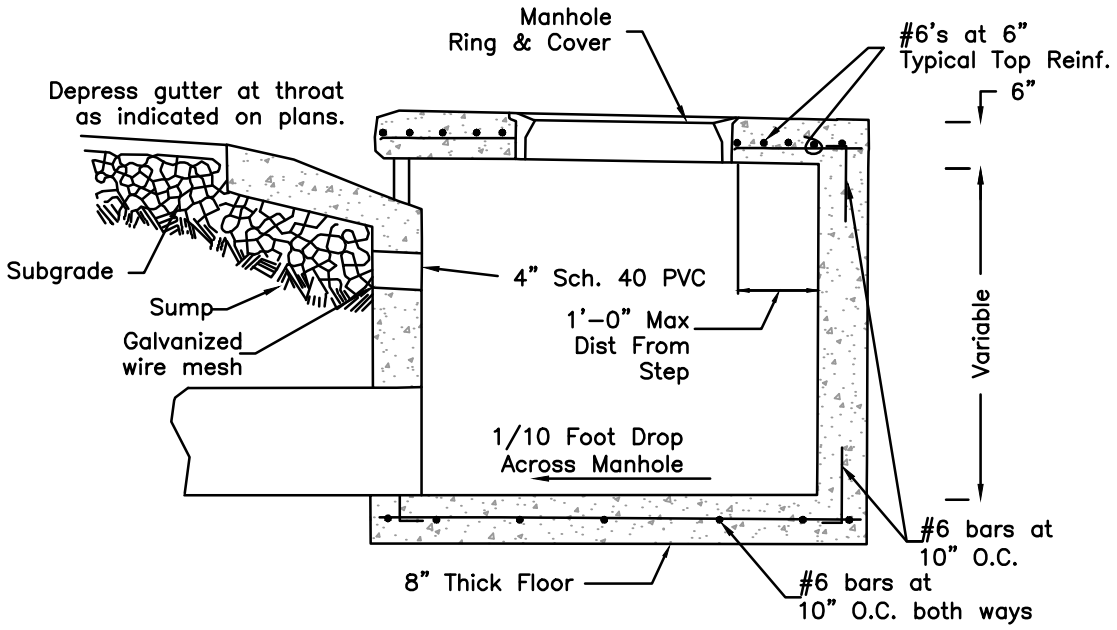

NOTE: Steps required in all inlets exceeding 3'–0" in depth. Reinforcement not required in circular inlet walls unless specified on plans.

Depression See Detail PW–3

DIA. OF STRUCTURE	WALL THICKNESS	DIA. OF OUTLET PIPE
4' I.D.	6"	15" Thru 27"
5' I.D.	8"	30" Thru 42"
6' I.D.	8"	48" Thru 54"
8' I.D.	10"	60" Thru 72"

	TITLE		PW–8
	CURB INLET – JUNCTION REINFORCED CONCRETE BOX CONSTRUCTION DETAILS	Issue Date AUG, 2006	Revision Date DEC 2012

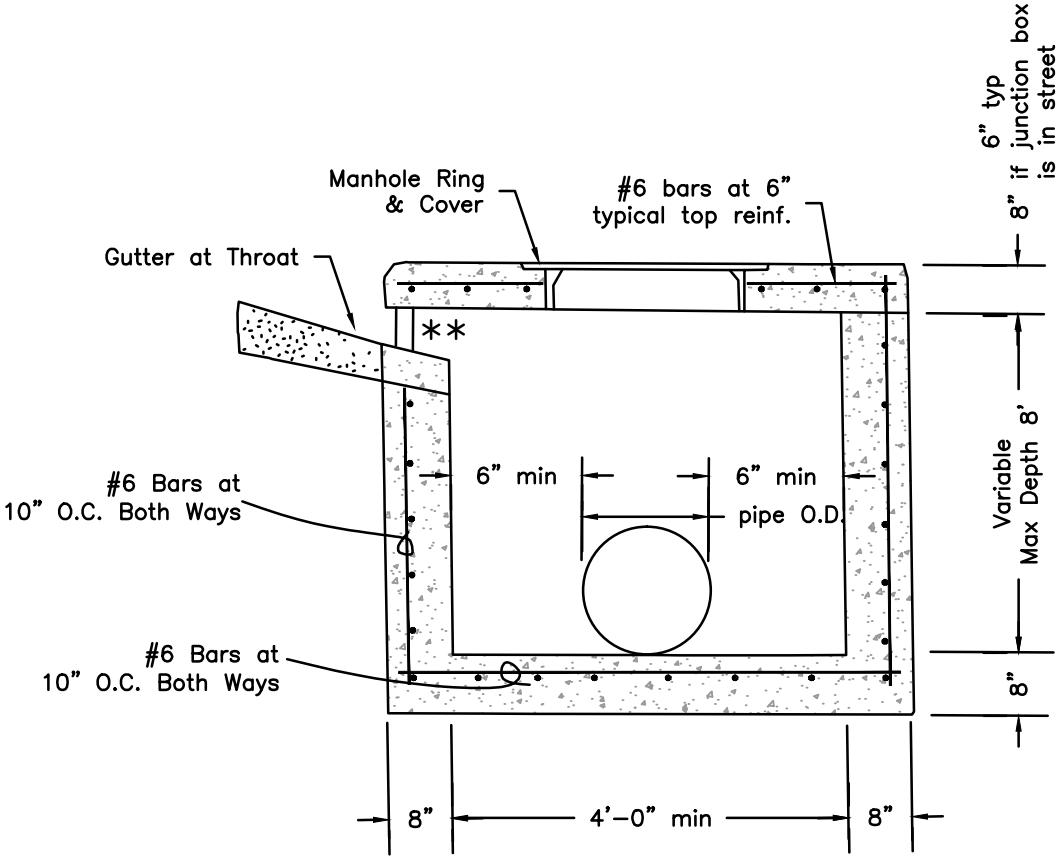

SECTION

NOTES

1. Rings and Covers see PW–13.
2. Refer to PW–12 detail for steps.

** Depression Detail see PW–3.

	TITLE		PW–9
	TYPICAL DRAINAGE INLET THROAT OPENING DETAIL (NOT IN RADIUS)	Issue Date AUG, 2006	Revision Date DEC 2012

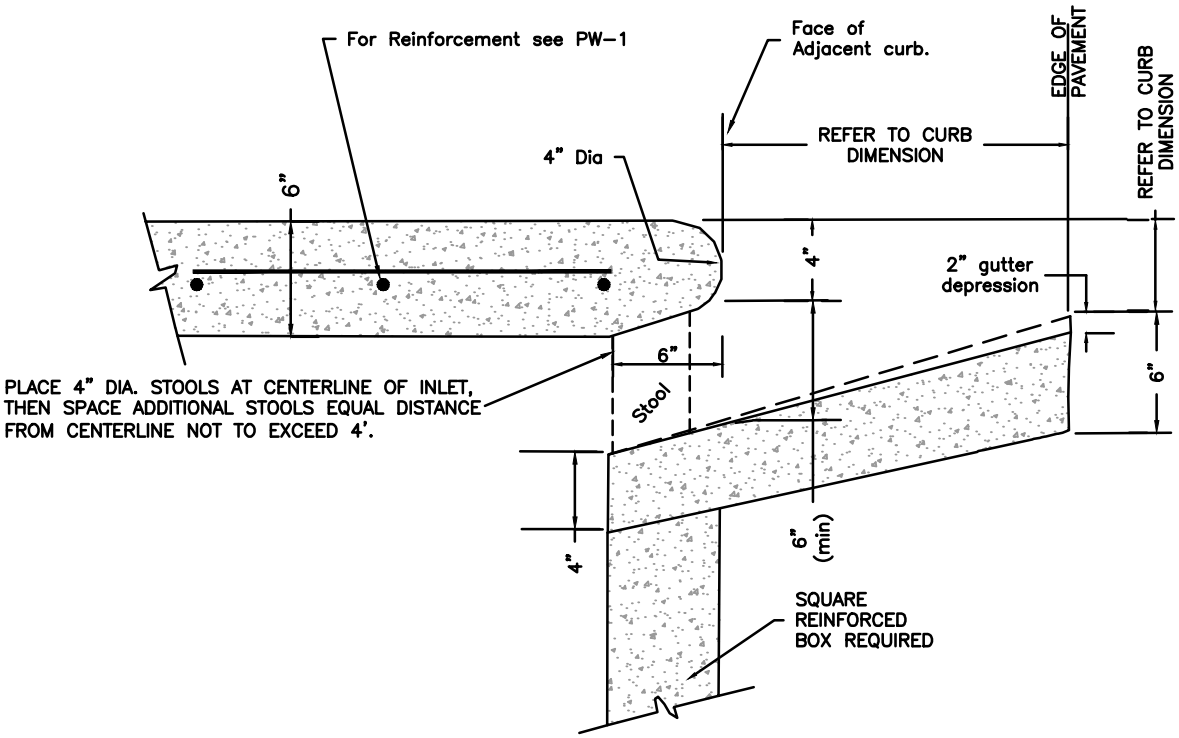

INLET THROAT BETWEEN STOOLS

NOTE: This detail is not to be used for inlets in curb radius.
See PW–10 for detail of inlet top in curb radius.

	TITLE		PW–10
	TYPICAL DRAINAGE INLET THROAT OPENING AND TOP DETAIL WHERE IN CURB RADIUS	Issue Date AUG, 2006	Revision Date DEC 2012

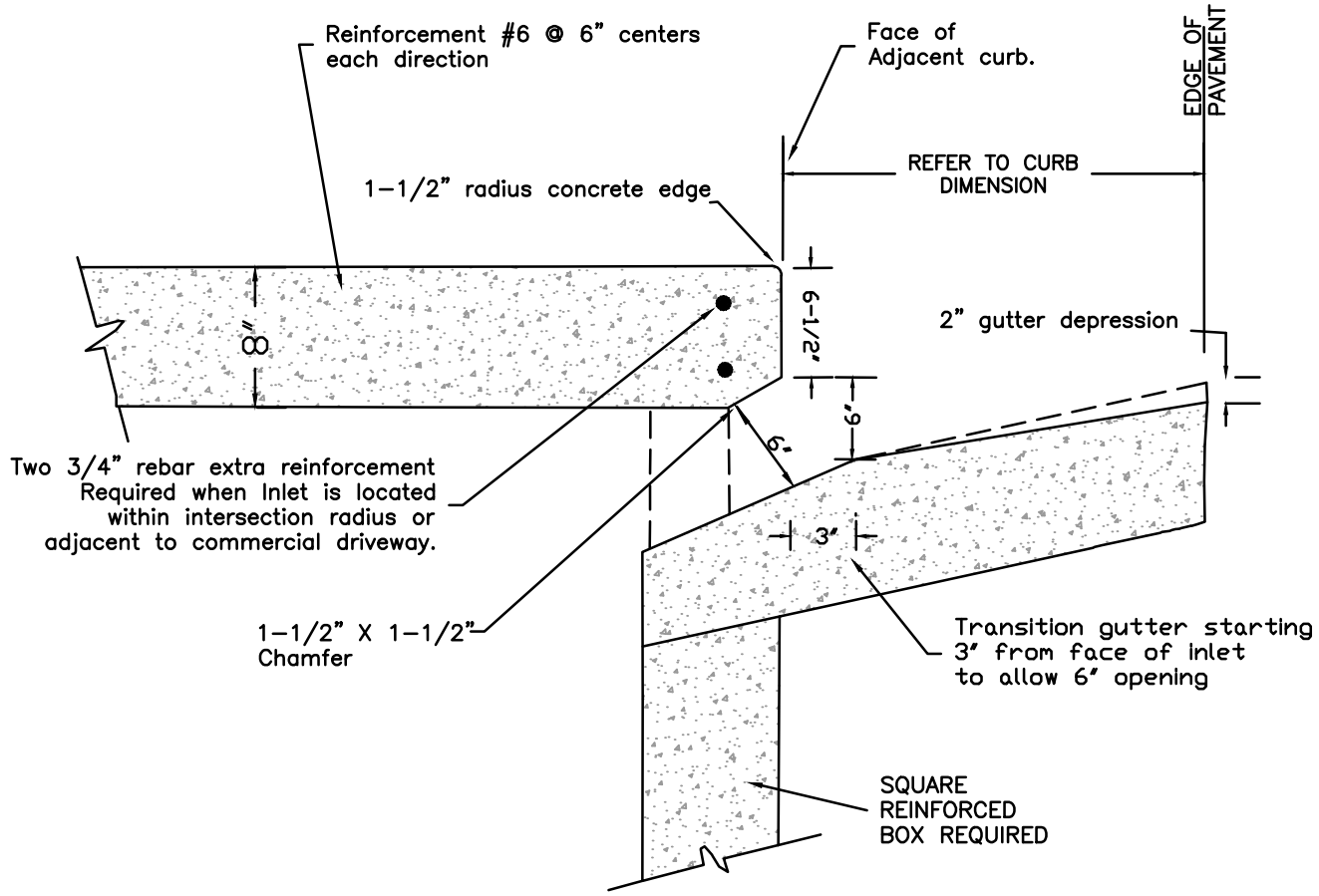

INLET THROAT IN RADIUS (SIDE VIEW)

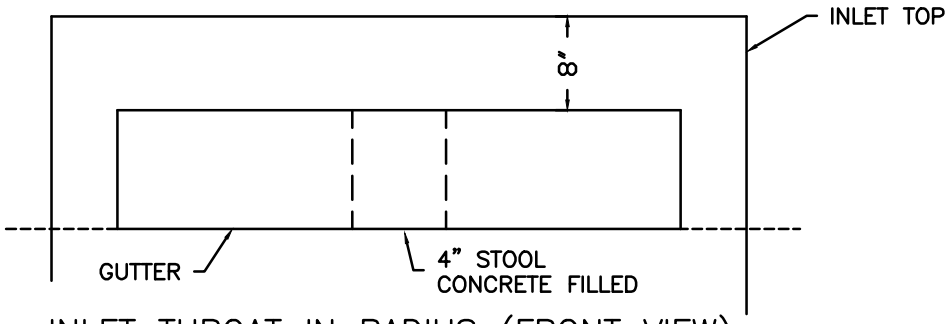

INLET THROAT IN RADIUS (FRONT VIEW)

PLACE 4" DIA. STOOLS AT CENTERLINE OF INLET, THEN SPACE ADDITIONAL STOOLS EQUAL DISTANCE FROM CENTERLINE NOT TO EXCEED 3'.

	TITLE		PW–11
	JUNCTION BOX IN ROADWAY	Issue Date AUG, 2006	Revision Date DEC 2012

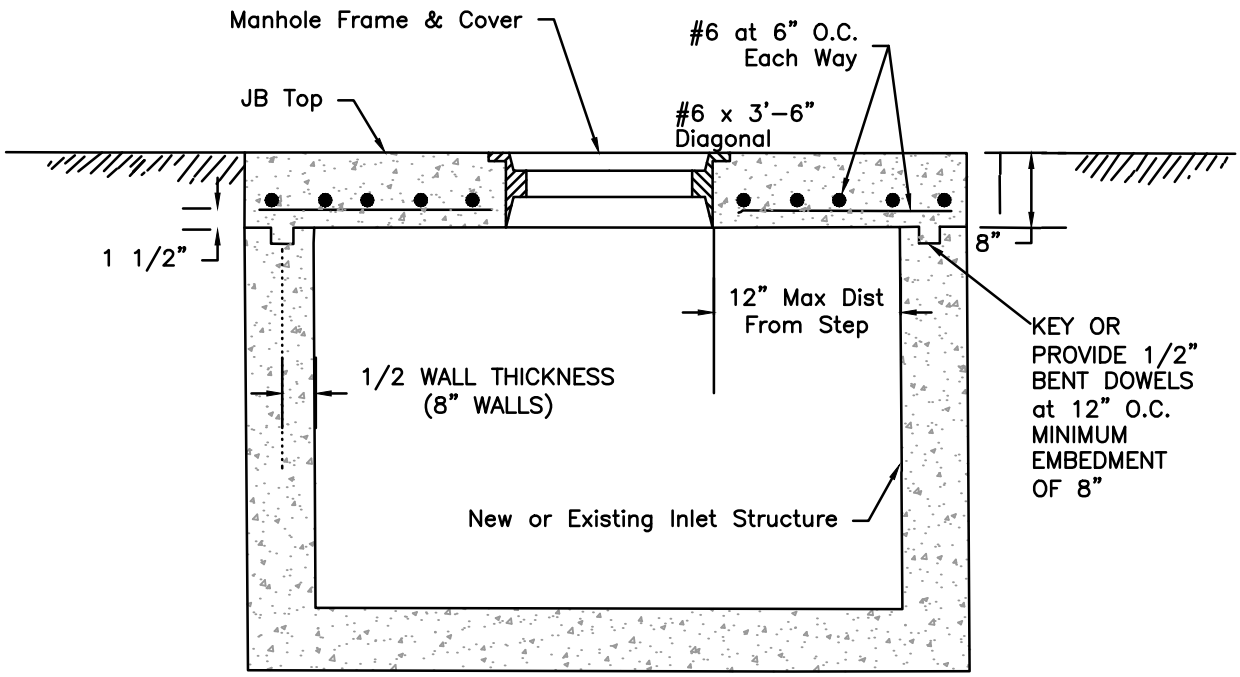

NOTE: Junction box top may be held below ACHM Surface and manhole cover extended up flush with paving surface.

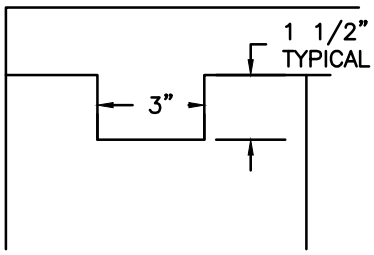

8" WALL–KEY DETAIL

	TITLE CURB INLET STEPS		PW–12
		Issue Date AUG, 2006	Revision Date DEC 2012

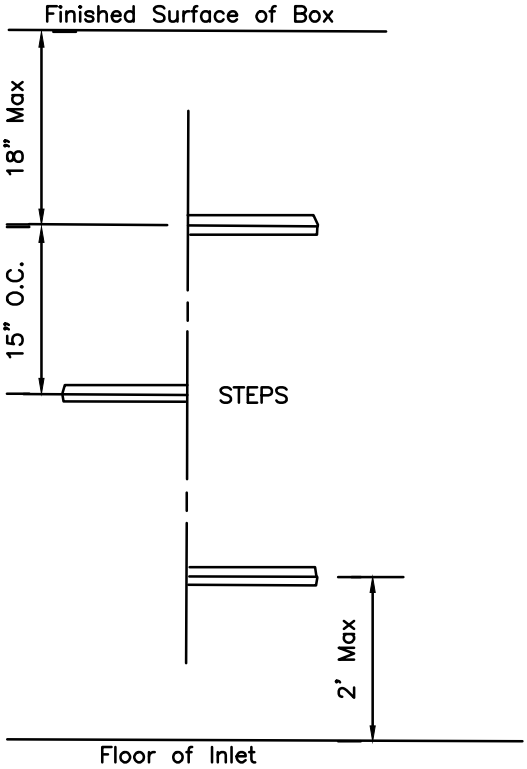

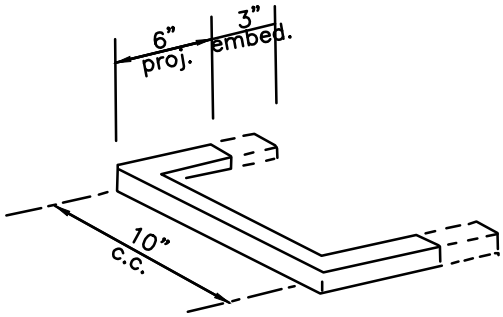

A. Manhole steps: corrosion resistant, coated, and reinforced with steel per ASTM C–478. Steel reinforcing minimum 1/2" diameter.

B. Acceptable Manufacturers:

1. Utility Products Inc. Perma Step 100–2
2. ICM Inc. Polypropylene coated steps.
3. M.A Industries, Inc. Polypropylene coated steps. #PSI–PF
4. BOWCO, by H. Bowen Co.

C. Capable of supporting minimum 300 lb. load.

D. Non–Slip textured treads.

E. Required in all structures 3'–0" deep or greater.

	TITLE		PW-13
	MANHOLE FRAME & COVER	Issue Date AUG, 2006	Revision Date DEC 2012

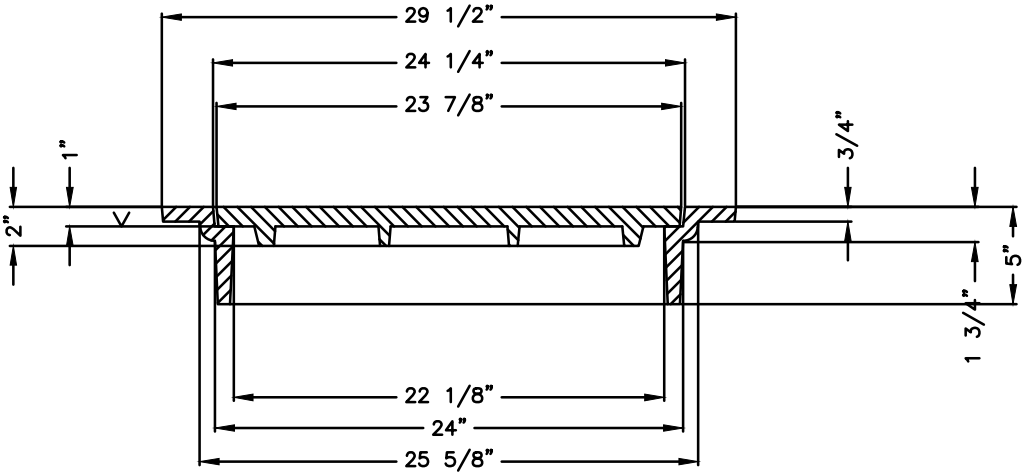

NOTE:
1. FURNISHED WITH MACHINED HORIZONTAL BEARING SURFACES.

ITEM:
1. #2018-A (ENVIRONMENTAL) AS MANUFACTURED BY DEETER FOUNDARY, INC. OR EAST JORDAN 2750A MANHOLE COVER (275-24) WITH ABOVE LETTERING, OR APPROVED EQUAL PER ENGINEER.

MATERIAL:	CAST GRAY IRON ASTM A-48, CLASS 35B
FINISH:	NO PAINT
WEIGHT:	COVER 140 LBS. FRAME 133 LBS.

	TITLE		PW–14
	MANHOLE TOP ADJUSTMENT DETAIL	Issue Date AUG, 2006	Revision Date DEC 2012

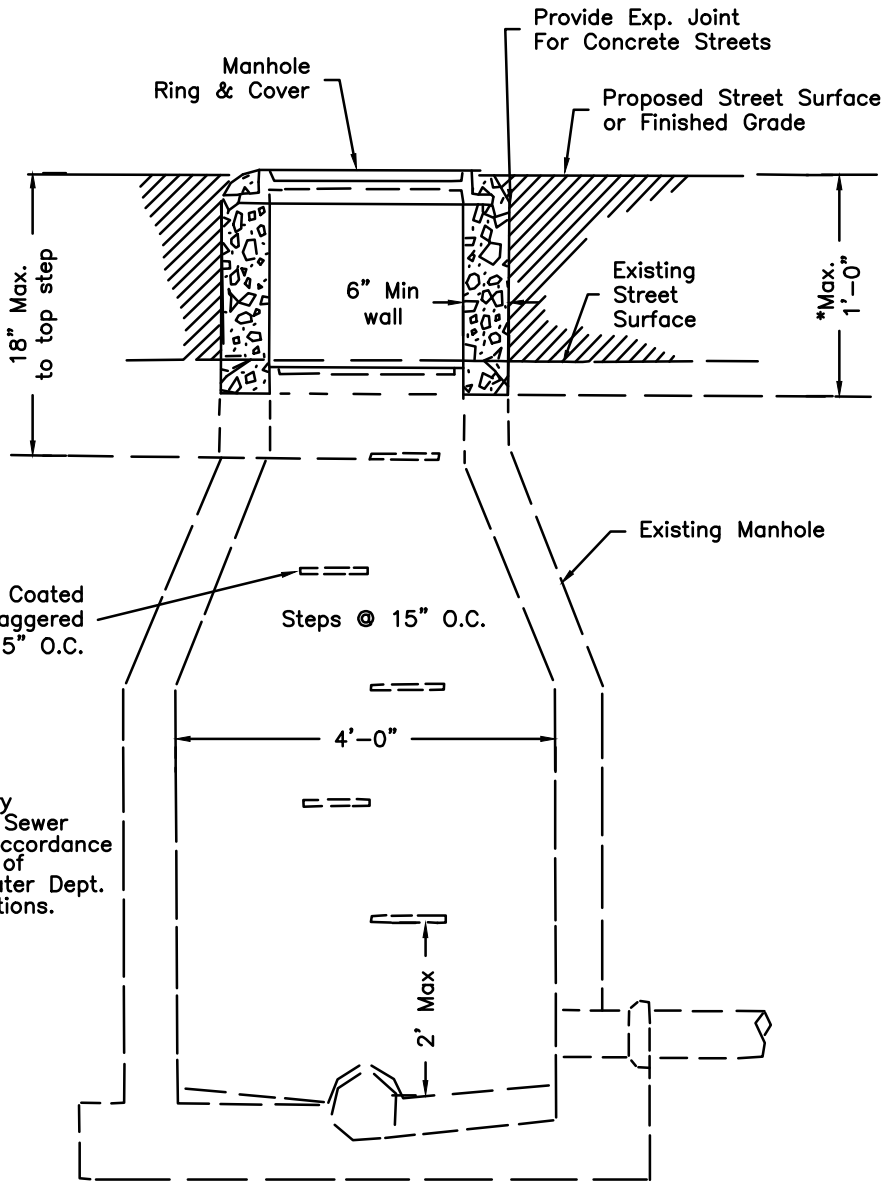

NOTE: All Work on Sanitary Sewer Manholes & Sewer Lines shall be in accordance with Standard City of Little Rock Wastewater Dept. Details & Specifications.

* NOTE: Where a neck section of greater than 12" is Required to bring the Manhole up to the New Grade, the contractor shall Rebuild the Cone Section of the Manhole.

	TITLE		PW–17
	MAIL BOX INSTALLATION DETAIL	Issue Date AUG, 2006	Revision Date DEC 2012

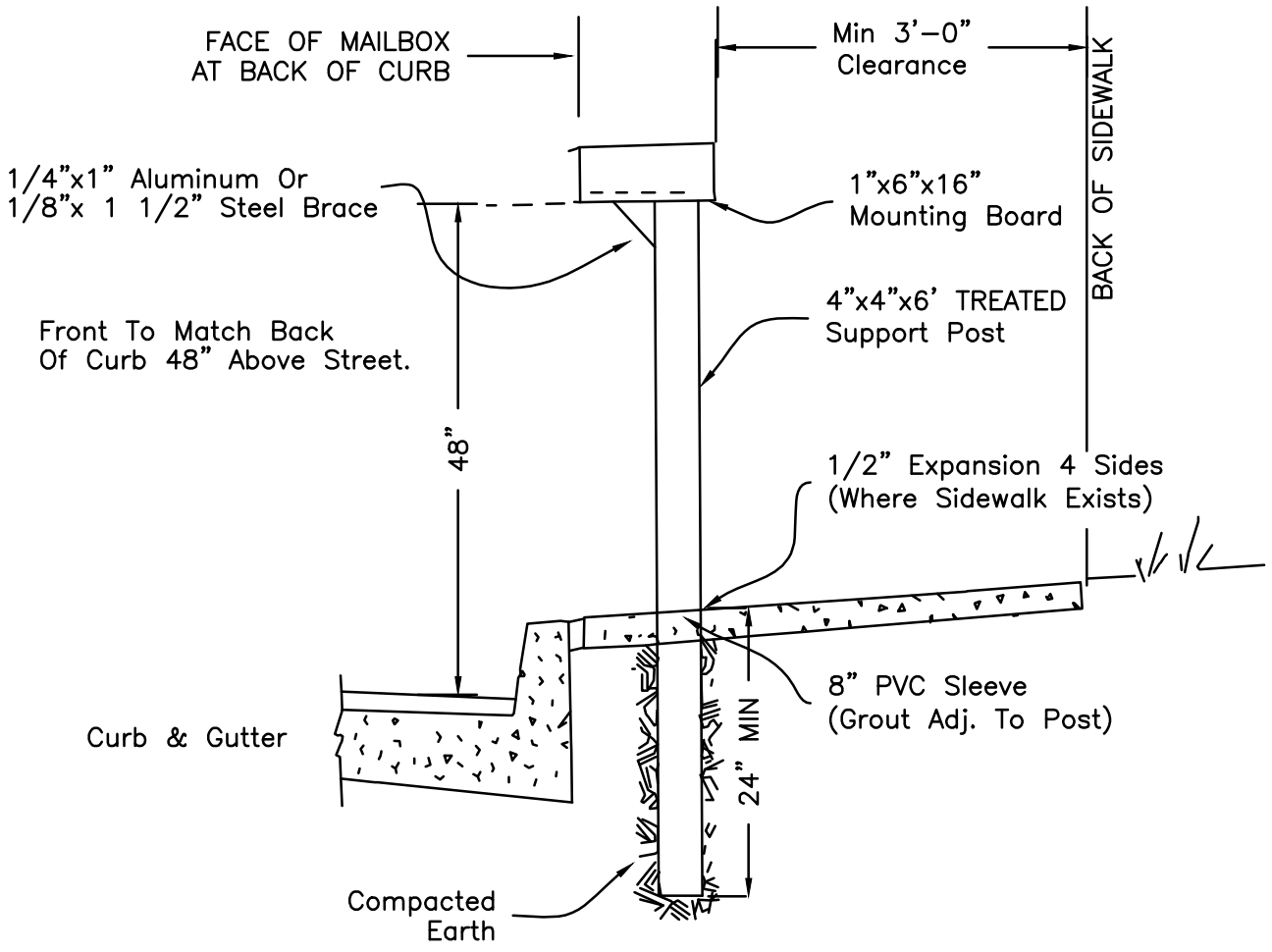

	TITLE PROJECT KIOSK		PW–18
		Issue Date AUG, 2006	Revision Date DEC 2012

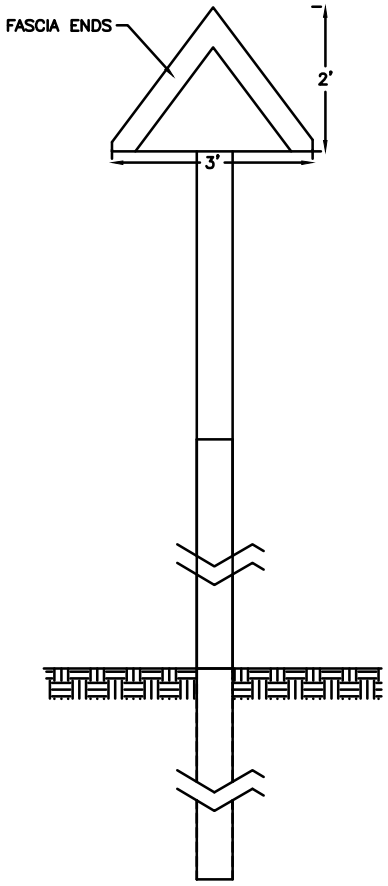

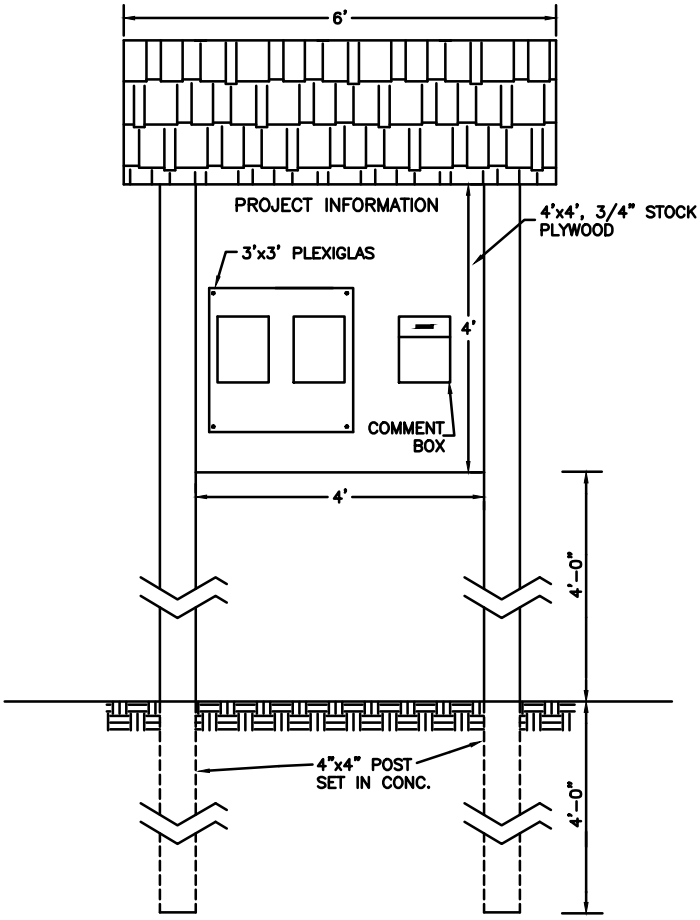

ROOF: 1/2" BOARD SHEATHING
RAFTERS ON 24" C–C (2"x4" HORIZONTAL)

SHINGLES: 3–TAB SQUARE BUTT (100 LB)
OR ROLL ROOFING (MINERAL SURFACED)
ROOFING FELT (15–LB)

PAINT: (ALL EXPOSED WOOD SHALL BE PAINTED)
LIGHT GREY, DARK ROOF
INCLUDING UNDER EAVES.

KIOSK TO BE PLACED ON PROJECT
AS DIRECTED BY THE ENGINEER.
OR AS SHOWN ON PLANS.

	TITLE		PW–19
	SUB–DRAIN DETAIL	Issue Date AUG, 2006	Revision Date DEC 2012

NOTE: Placement and Location of Sub–Drain shall be determined by Engineer during Construction Period or as Indicated on Plans.

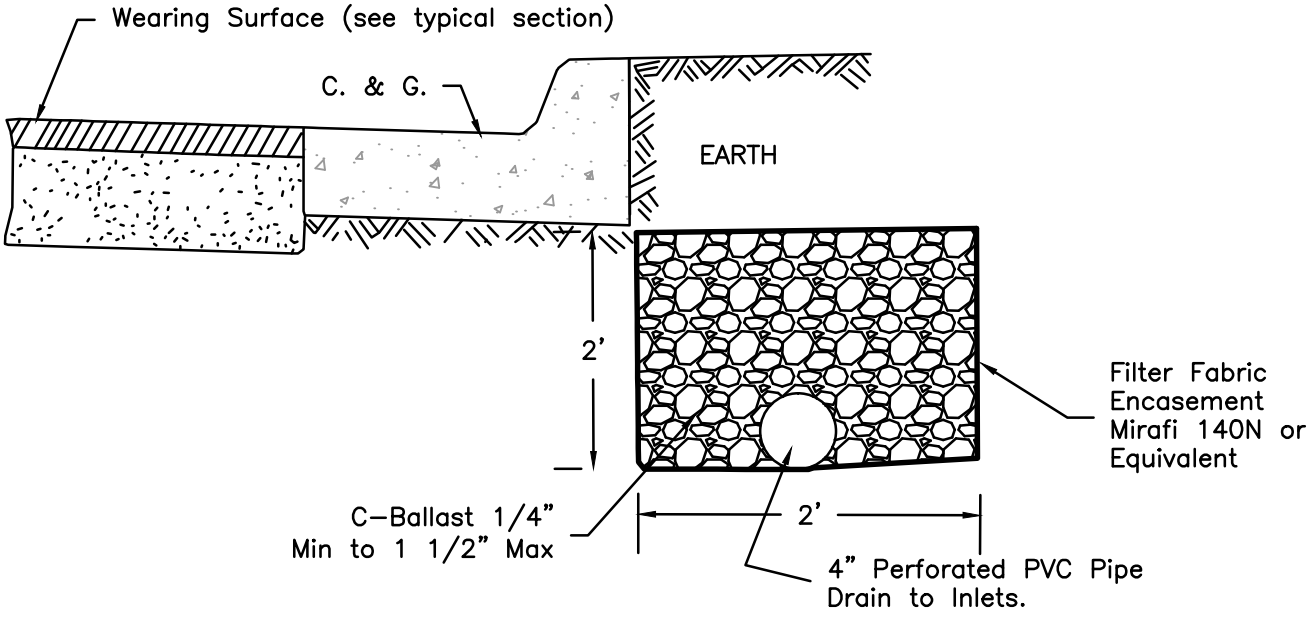

SUB–DRAIN DETAIL

	TITLE		PW-20
	HANDRAIL DETAIL ALTERNATE	Issue Date AUG, 2006	Revision Date DEC 2012

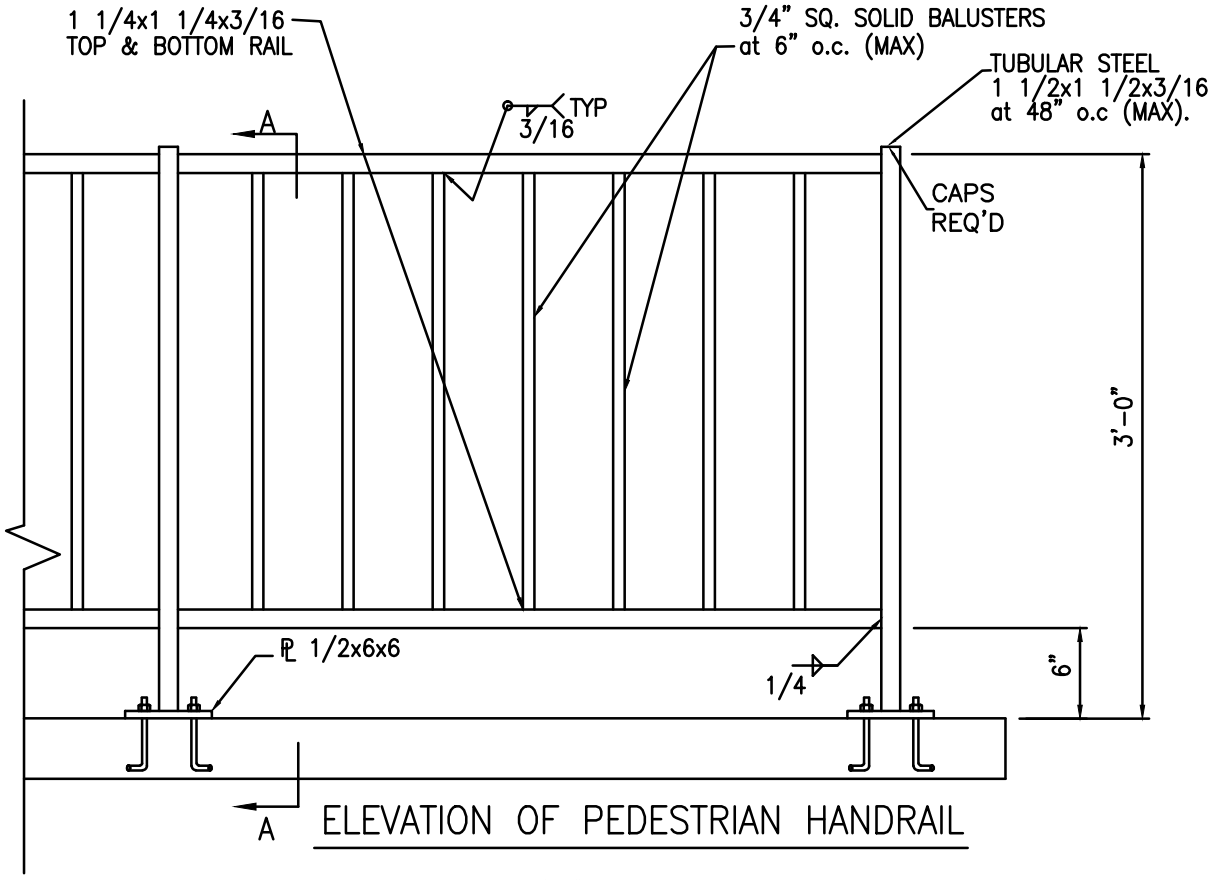

ELEVATION OF PEDESTRIAN HANDRAIL

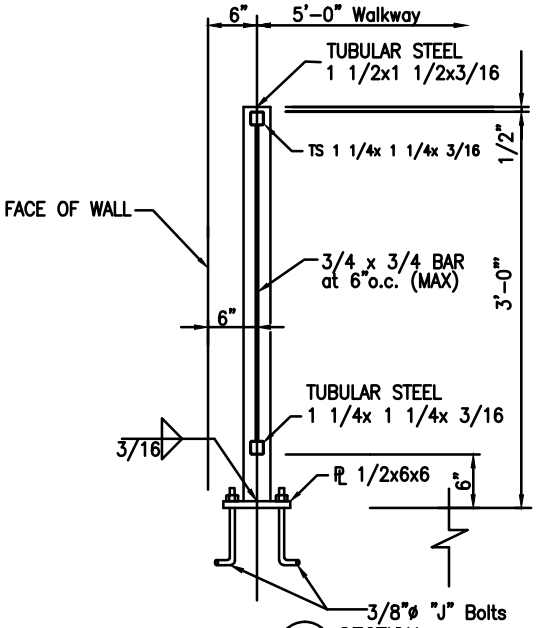

A-A SECTION
S NO SCALE

Material for pedestrian handrail shall be AASHTO M270, Gr. 36 and shall be painted (black). Nuts & washers shall be stainless steel as noted on details.

	TITLE		PW-21
	HANDRAIL DETAIL	Issue Date AUG, 2006	Revision Date DEC 2012

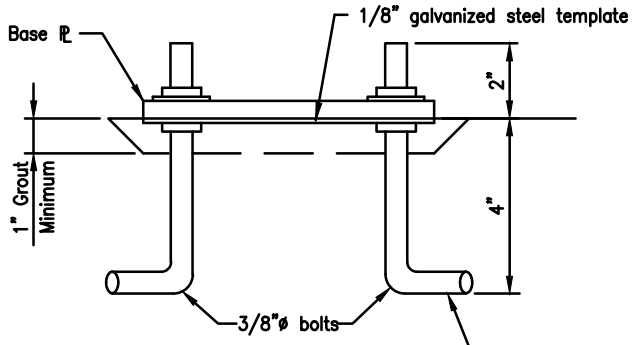

Stainless Steel Bolt ASTM A193, Grade B8 or B8A
Stainless Steel Nut AASHTO M292, Grade 8
Stainless Steel Washer ASTM A276, Grade 302

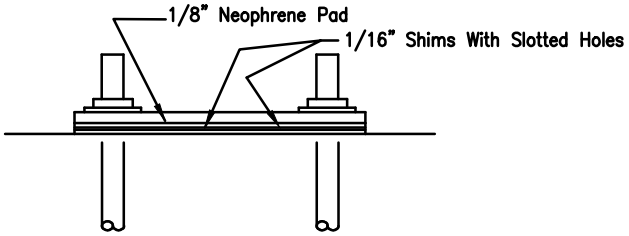

Contractor may place the 1/8" galvanized steel template on the finished sidewalk surface and provide shim plates and neoprene pads for leveling, in lieu of placing the template on nuts, leveling and finishing with grout.

Note: All posts & balusters shall be vertical.

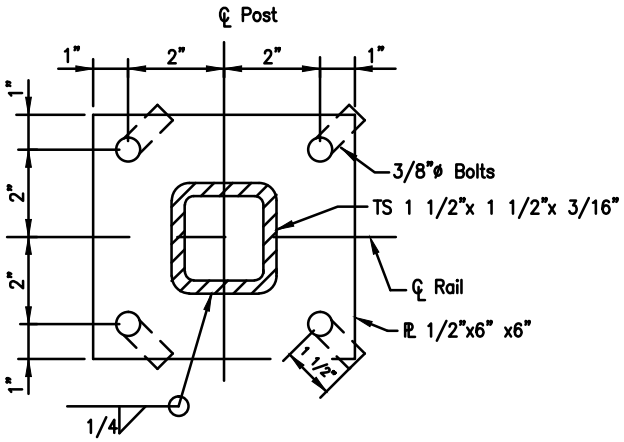

HANDRAIL ANCHOR BOLT ASSEMBLIES

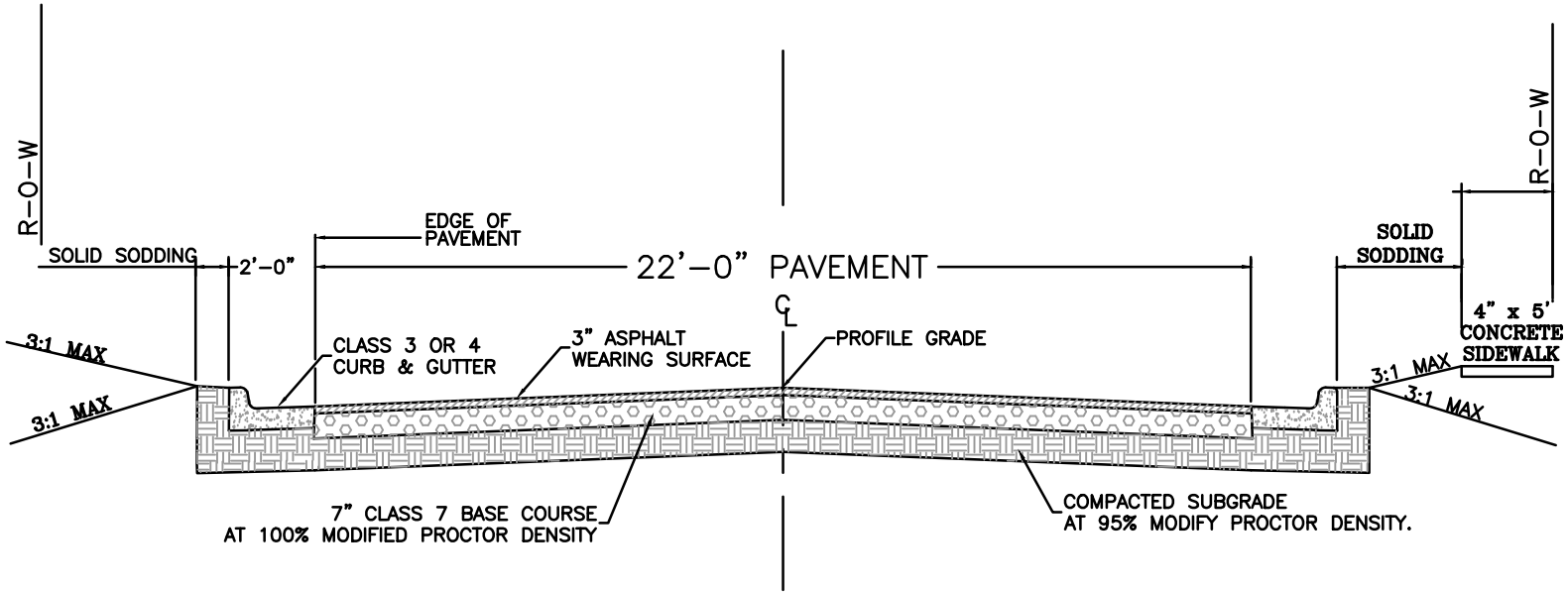

GENERAL NOTES

1. IN AREAS TO RECEIVE BITUMINOUS PAVING, CONCRETE DRIVEWAYS, OR CURB AND GUTTER, SUBGRADE SHALL BE COMPACTED TO A DENSITY NOT LESS THAN 95% OF MAXIMUM DENSITY OBTAINED AT OPTIMUM MOISTURE CONTENT. (AASHTO T-180)

2. FOR AREAS OF SUBGRADE PREPARATION TO RECEIVE CONCRETE SIDEWALKS, SUBGRADE SHALL BE COMPACTED TO A DENSITY OF 90% MAXIMUM.(AASHTO T-180).

3. CRUSHED STONE- MATERIAL IN EACH COURSE SHALL BE COMPACTED TO A DENSITY OF 100% MAXIMUM (AASHTO T-191).

4. CENTERLINE PROFILE WILL REQUIRE HEIGHT GREATER THAN CURB FOR SOME STREETS TO MAINTAIN 2% MINIMUM CROSS-SLOPE.

THICKNESS SHALL BE DETERMINED BY SOIL TEST AND PAVEMENT DESIGN IF REQUIRED BY DEPARTMENT OF PUBLIC WORKS.

20'-0" PAVEMENT FOR MINOR RESIDENTIAL WHERE APPROVED BY CITY.

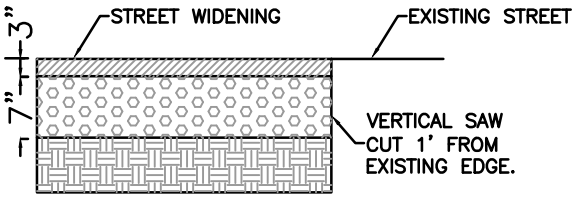

WIDENING EXISTING *

*NOTE: PAVEMENT RECONSTRUCTION TO CENTERLINE IS REQUIRED WHEN EXISITING STREET DOES NOT MEET THESE STANDARDS.

CITY OF LITTLE ROCK · PUBLIC WORKS

TITLE

TYPICAL SECTION
RESIDENTIAL STREET

Issue Date	Revision Date	PW-22
AUG, 2006	DEC 2012	

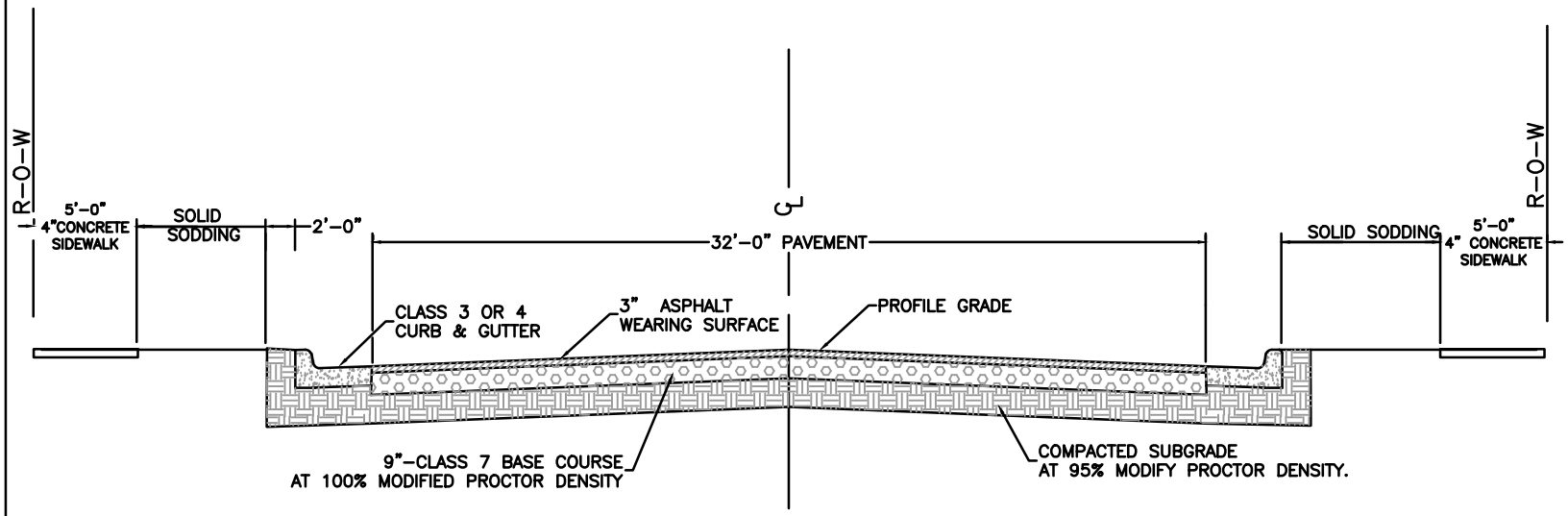

GENERAL NOTES

1. IN AREAS TO RECEIVE BITUMINOUS PAVING, CONCRETE DRIVEWAYS, OR CURB AND GUTTER, SUBGRADE SHALL BE COMPACTED TO A DENSITY NOT LESS THAN 95% OF MAXIMUM DENSITY OBTAINED AT OPTIMUM MOISTURE CONTENT. (AASHTO T-180)

2. FOR AREAS OF SUBGRADE PREPARATION TO RECEIVE CONCRETE SIDEWALKS, SUBGRADE SHALL BE COMPACTED TO A DENSITY 90% MAXIMUM.(AASHTO T-180).

3. CRUSHED STONE- DENSITY OF COMPACTED MATERIAL IN EACH COURSE SHALL BE COMPACTED TO A DENSITY 100% MAXIMUM .(AASHTO T-191).

4. CENTERLINE PROFILE WILL REQUIRE HEIGHT GREATER THAN CURB STREETS TO MAINTAIN 2% MINIMUM CROSS-SLOPE.

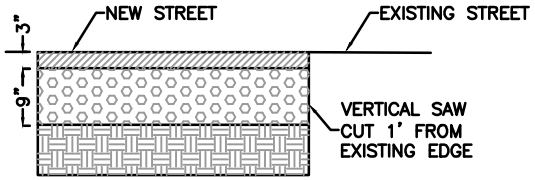

WIDENING EXISTING *

THICKNESS SHALL BE DETERMINED BY SOIL TEST AND PAVEMENT DESIGN IF REQUIRED BY DEPARTMENT OF PUBLIC WORKS.

NOTE:
* 8" CONCRETE W/ 3" ACHM (1 1/2 BINDER / 1 1/2 SURFACE) AS APPROVED BY PUBLIC WORKS AS SUBSTITUTE CONSTRUCTION. PAVEMENT RECONSTRUCTION TO CENTERLINE IS REQUIRED, IF EXISTING PAVEMENT DOES NOT CONFORM TO THESE STANDARDS.

CITY OF LITTLE ROCK · PUBLIC WORKS

TITLE
TYPICAL SECTION
COLLECTOR OR COMMERCIAL
STREET

Issue Date
AUG, 2006

PW-23
Revision Date
DEC 2012

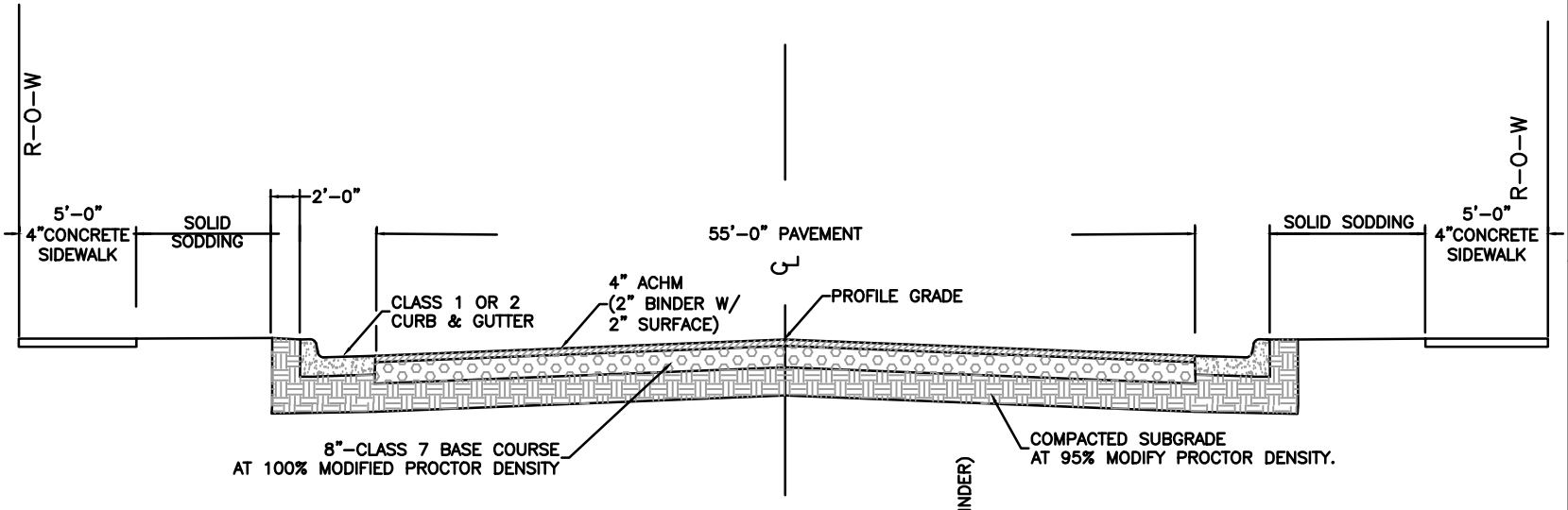

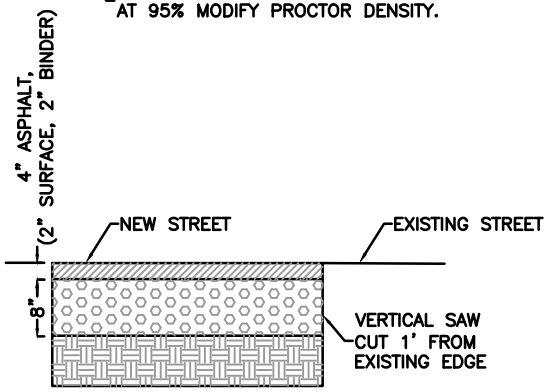

WIDENING EXISTING *

GENERAL NOTES

1. IN AREAS TO RECEIVE BITUMINOUS PAVING, CONCRETE DRIVEWAYS, OR CURB AND GUTTER, SUBGRADE SHALL BE COMPACTED TO A DENSITY NOT LESS THAN 95% OF MAXIMUM DENSITY OBTAINED AT OPTIMUM MOISTURE CONTENT. (AASHTO T-180)
2. FOR AREAS OF SUBGRADE PREPARATION TO RECEIVE CONCRETE SIDEWALKS, THE SUBGRADE SHALL BE COMPACTED TO A DENSITY OF 95% OF THE MAXIMUM.(AASHTO T-180).
3. CRUSHED STONE- DENSITY OF COMPACTED MATERIAL IN EACH COURSE SHALL BE COMPACTED TO A DENSITY 100% MAXIMUM (AASHTO T-191).
4. CENTERLINE PROFILE WILL REQUIRE HEIGHT GREATER THAN CURB FOR SOME STREETS TO MAINTAIN 2% MINIMUM CROSS-SLOPE.
5. WIDENING REQUIRES BUTT JOINTS SAW CUT WHERE NEW WIDENING ABUTS OLD.

ALL THICKNESS SHALL BE DETERMINED BY SOIL TEST AND PAVEMENT DESIGN IF REQUIRED BY DEPARTMENT OF PUBLIC WORKS.

NOTE:
* 8" CONCRETE W/ 4" ACHM (2" BINDER/2" SURFACE) FOR AREA AS APPROVED BY PUBLIC WORKS AS SUBSTITUTE CONSTRUCTION.
PAVEMENT RECONSTRUCTION TO CENTERLINE IS REQUIRED, IF EXISTING PAVEMENT DOES NOT CONFORM TO THESE STANDARDS.

CITY OF LITTLE ROCK · PUBLIC WORKS

TITLE
TYPICAL SECTION
MINOR ARTERIAL STREET

Issue Date
AUG, 2006

PW-24
Revision Date
DEC 2012

	TITLE		PW–25
	UTILITY CUT–PAVEMENT REPLACEMENT ON EXISTING ASPHALT STREET	Issue Date AUG, 2006	Revision Date DEC 2012

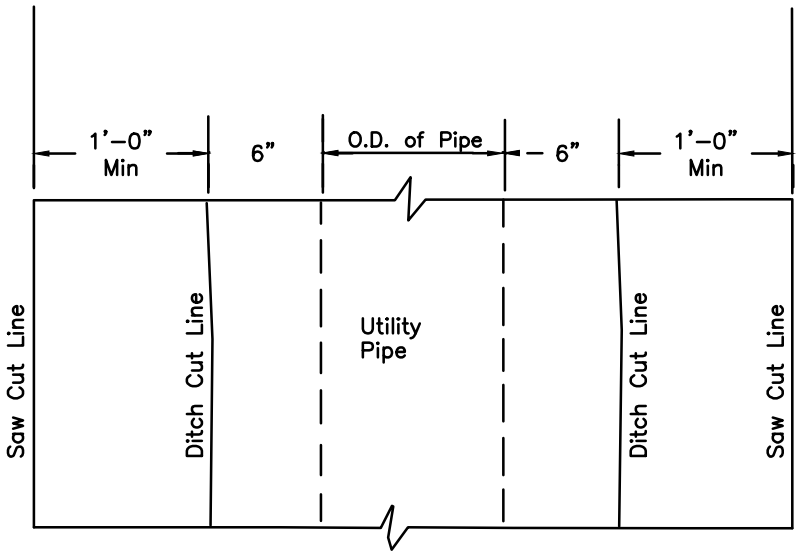

PLAN

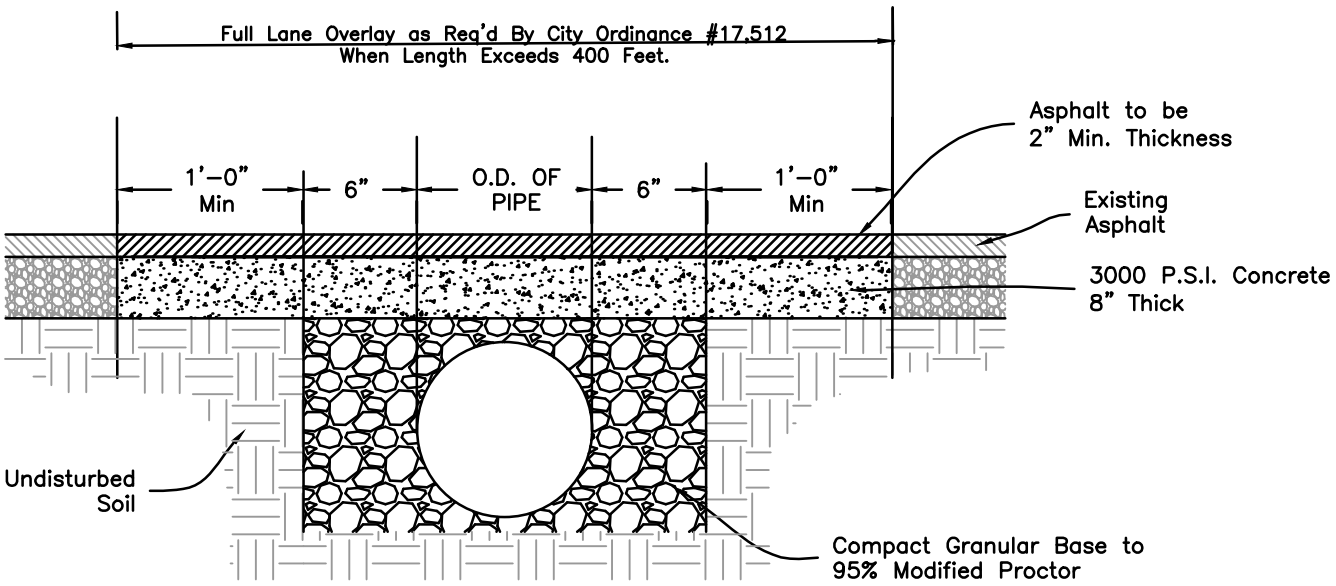

SECTION

	TITLE		PW–26
	DRAINAGE AND UTILITY CUT BACKFILL ON STREET UNDER NEW CONSTRUCTION	Issue Date AUG, 2006	Revision Date DEC 2012

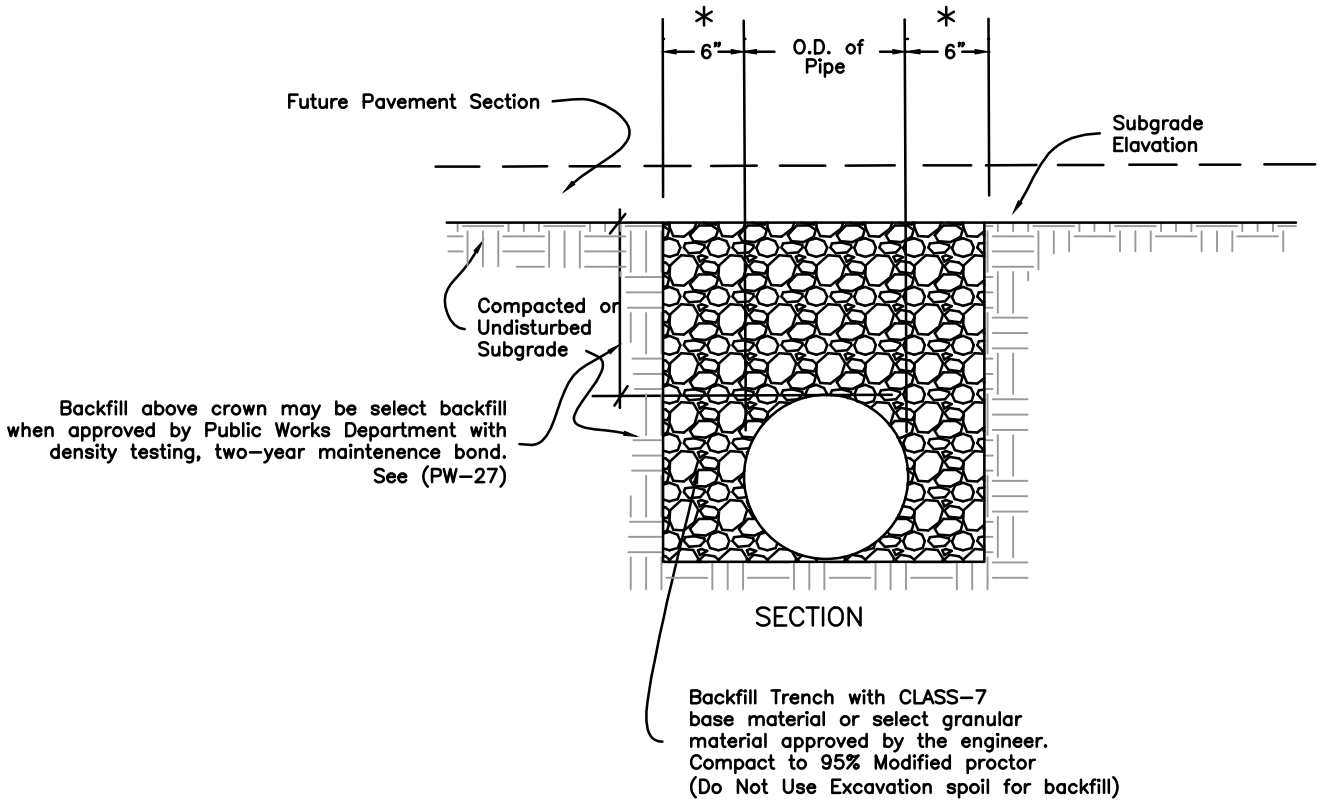

NOTE: This backfill procedure shall be utilized for all trenches excavated in area to be paved.

* SEE PUBLIC WORKS STANDARD SPECIFICATIONS FOR TRENCH WIDTH AND DEPTH REQUIRED FOR STORM DRAIN APPLICATIONS.

	TITLE		PW–27
	TRENCH BACKFILL REQUIREMENTS (NEW STREETS)	Issue Date JAN, 2003	Revision Date DEC 2012

The City will allow Contractor to backfill utility and stormdrain installations under a planned new street with select material or approved borrow material providing Engineer of Record and Contractor comply with following:

* Engineer of Record must submit a request in writing to Department of Public Works. Letter must note agreement with conditions of this memorandum.

* Trench backfill with other than aggregate per current City standard is not allowed in cuts of existing street, on projects where street construction is a partial widening (boundary street widening), or a street extension less than 300 feet in length. Locations must be approved prior to start of construction.

* A two year maintenance bond for one–half project's construction cost shall be provided and shall cover all construction associated with project (curbs, base, ACHM surface, drainage inlets, stormdrain, sidewalks, and other improvements in right–of–way).

* Trenches shall be a minimum of eighteen inches in width to allow for proper compaction.

* Aggregate material as approved by Department of Public Works shall be used to crown of pipe.

* Material used for backfilling may be suitable excavated material, and it may be necessary to stockpile a part or all of this suitable material for later use. Material shall be free of frozen material, trash, lumber, broken concrete having a dimension larger that two inches, or other debris. Such material shall be capable of being compacted to a density of not less than ninety–five (95) percent of maximum density, at optimum moisture, obtained in laboratory in accordance with AASHTO–Designation T–180. All tests are to be at expense of Developer or Contractor.

* A letter certifying compaction of backfill in trenches shall be furnished for a minimum of every third lift with eight inch lifts maximum (one test per two feet of fill). Test locations shall be spaced no further than one hundred feet, one per street crossing, or as required by Engineer of Record or City staff.

* Failure to provide satisfactory density testing of backfill for each trench will require one of three options of Contractor: A. Removal and re–compaction with certified testing. B. A maintenance bond for five (5) years shall be furnished for total project. C. A 3000 psi seven inch thick concrete cap two feet wider than trench may be installed below base course similar to Public Works Standard Detail PW–25.

	TITLE CURB & GUTTER SECTIONS ARTERIAL STREETS		PW–28
		Issue Date AUG, 2006	Revision Date DEC 2012

UPRIGHT CLASS I

Standard section for integral curb shall conform to that portion of standard section above dashed line as indicated hereon.

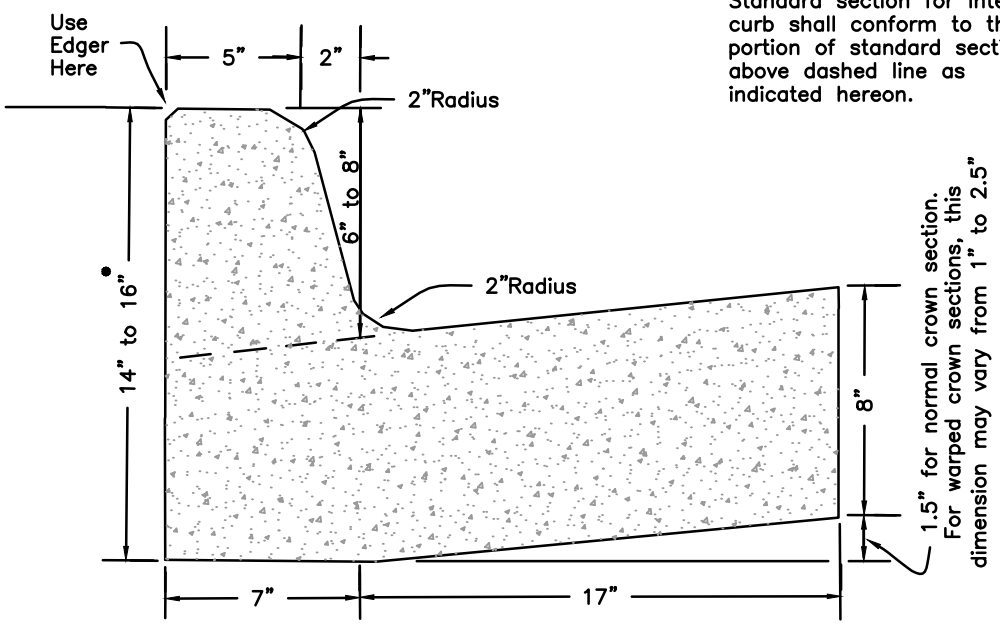

• REQUIRED ON CHENAL PARKWAY

ROLL CLASS 2

Standard section for integral curb shall conform to that portion of standard section above dashed line as indicated hereon.

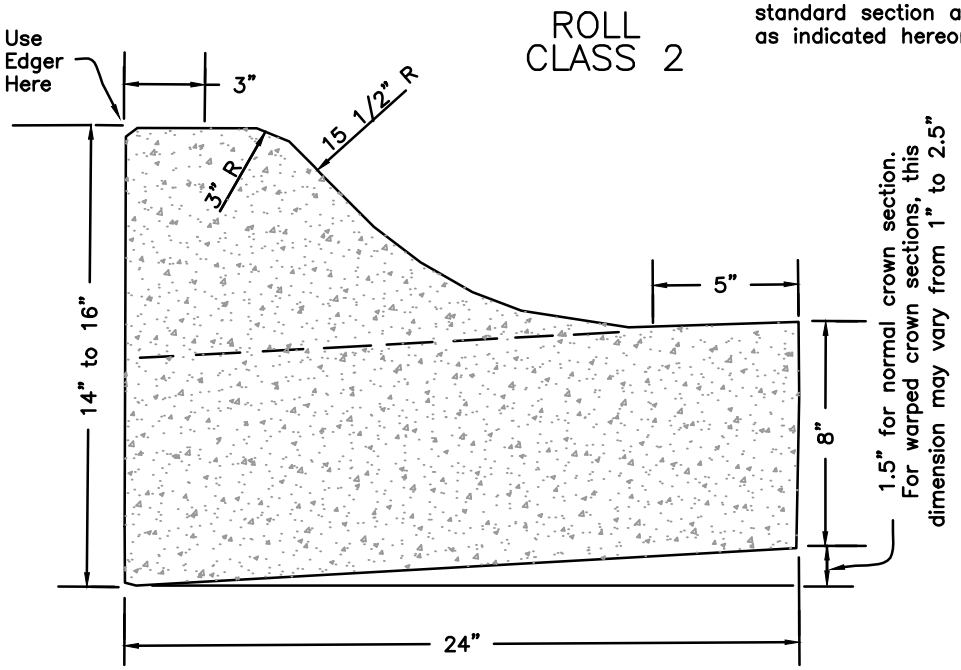

Install 1/2" Bituminous Expansion Joint Material At 100' Max. Intervals Or At Tie Ins To Boxes, Radius Returns Or Driveway Aprons. Control Joints 15' Max. O.C.

Joint Sealant Shall be Sonneborn SL2 Self Leveling Urethane as Manufactured by Chemrex or Equivalent.

	TITLE		PW–29
	CURB & GUTTER SECTIONS RESIDENTIAL & COLLECTOR STREETS	Issue Date AUG, 2006	Revision Date DEC 2012

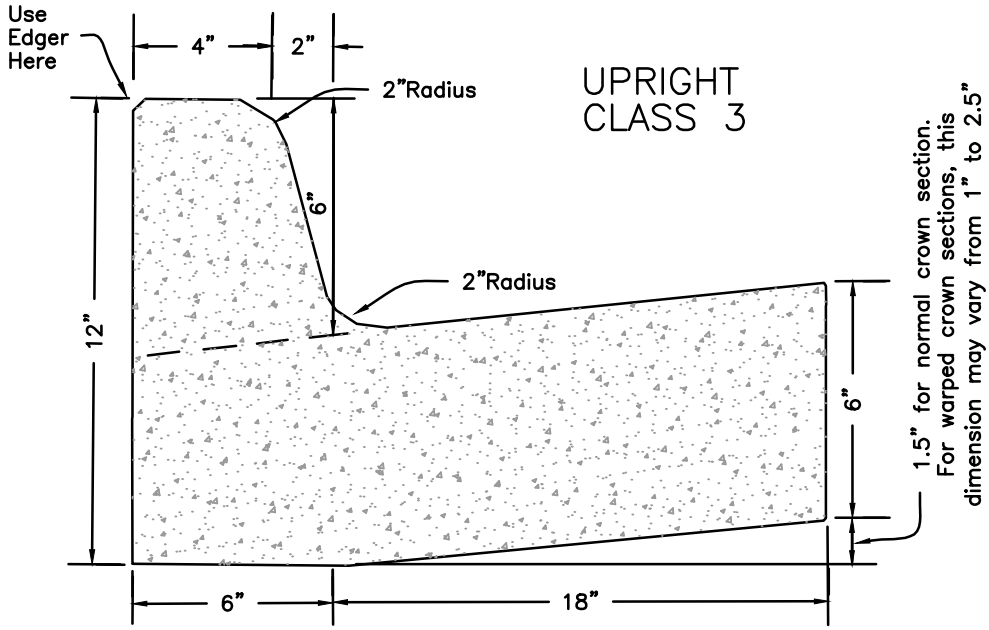

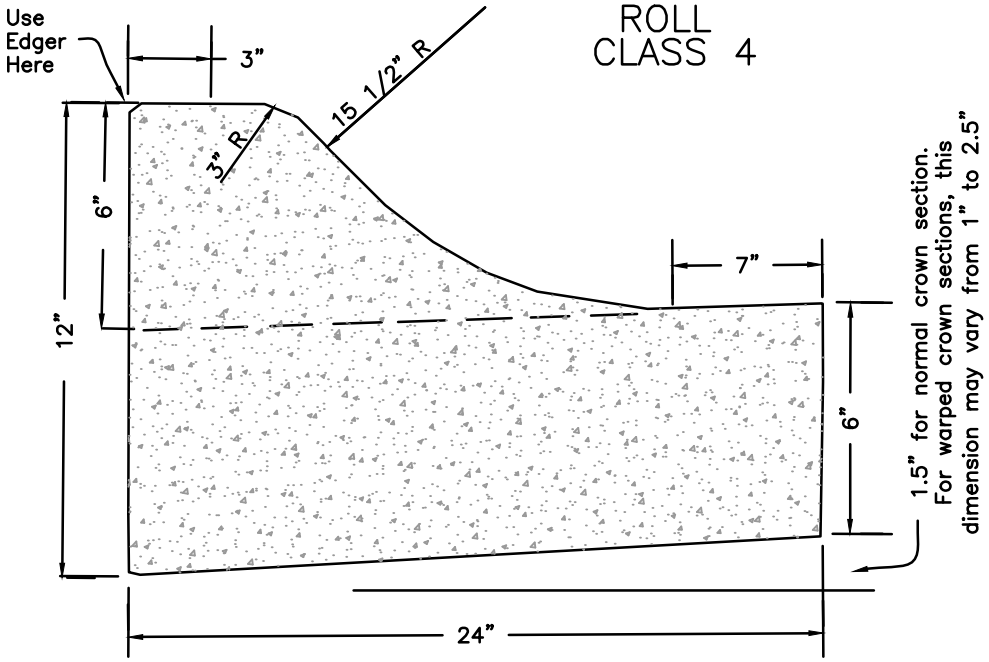

Install 1/2" Bituminous Expansion Joint Material At 100' Max. Intervals Or At Tie Ins To Boxes, Radius Returns Or Driveway Aprons. Control Joints 15' Max. O.C.

Joint Sealant Shall be Sonneborn SL2 Self Leveling Urethane as Manufactured by Chemrex or Equivalent.

	TITLE		PW–30
	RESIDENTIAL DRIVEWAY DETAILS (BUFFERED SIDEWALK)	Issue Date AUG, 2006	Revision Date DEC 2012

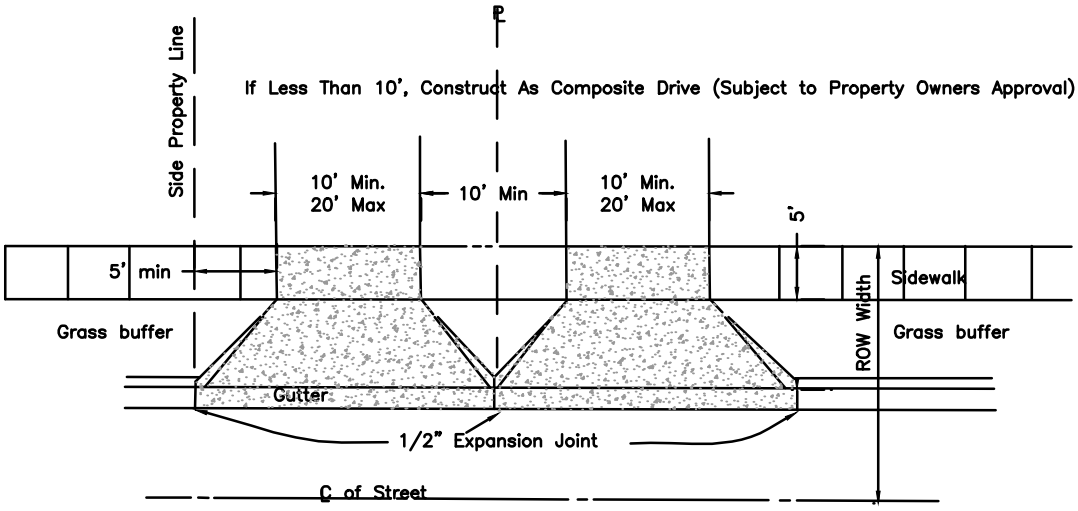

PLAN–PARALLEL DRIVE

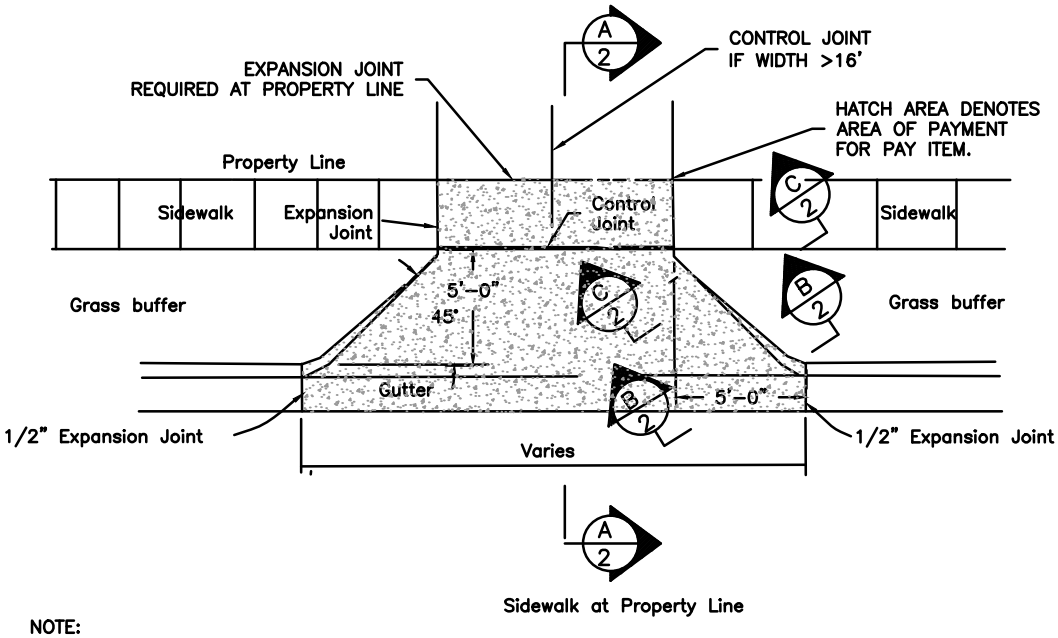

Sidewalk at Property Line

NOTE:

1. CONTROL JOINTS REQUIRED IN ALL DRIVEWAYS AT 12'–0" O.C. EACH WAY OR SPACED EQUAL TO THE WIDTH OF DRIVEWAY WHICHEVER IS LESS.
2. SECTIONS ARE ON PW–31.
3. GRASS BUFFER TO BE 5' WIDE UNLESS APPROVED BY CITY TO BE MODIFIED. GRASS BUFFER MAY BE REDUCED TO MINIMUM 36" WITH CITY APPROVAL.
4. DRIVEWAY GRADES SHALL BE DESIGNED BY ENGINEER TO KEEP STORMWATER IN STREET, 2% MINIMUM SLOPE AT SIDEWALK CROSSING, MAXIMUM % OF GRADE CHANGE IS 16.

	TITLE		PW–31
	RESIDENTIAL DRIVEWAY DETAILS AND NOTES	Issue Date AUG, 2006	Revision Date DEC 2012

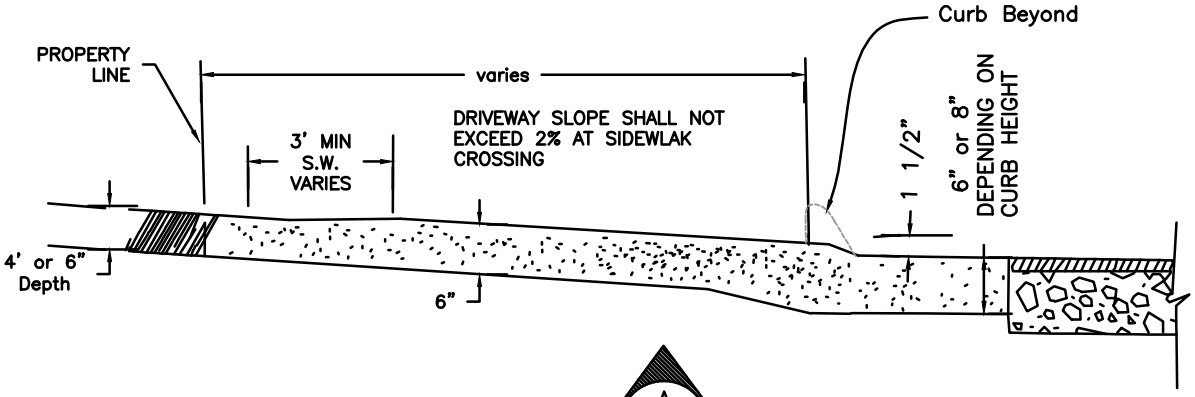

SECTION A/2

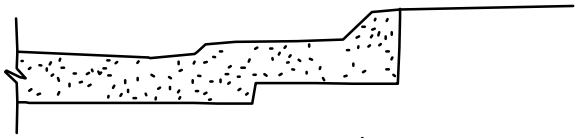

SECTION B/2

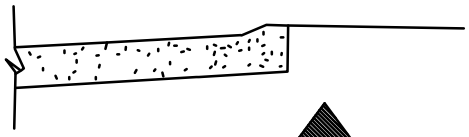

SECTION C/2

1. Driveway Grade Not To Exceed City Ordinance Requirements Stated in Section 31–210. Field Adjustment May Be Required At Certain Locations To Insure Proper Relation Between Driveway and Street Grades.

2. Driveways Shall Be Constructed To Property Line With Concrete Where Sidewalk Exists. Asphalt Permitted Where Sidewalk Does Not Exist.

3. Driveway Apron Shall Be Constructed Monolithically With Gutter Section, Unless Dowled Into Gutter Section With 1/2" Dowels 18" Long at 12" on Center and Approved by Engineer.

4. DRIVEWAY GRADES SHALL BE DESIGNED BY ENGINEER TO KEEP STORMWATER IN STREET, 2% MINIMUM SLOPE AT SIDEWALK CROSSING, MAXIMUM % OF GRADE CHANGE IS 16.

	TITLE DRIVEWAY DETAIL FOR RESIDENTIAL DRIVEWAYS (SIDEWALK AT BACK OF CURB)		PW–32
		Issue Date AUG, 2006	Revision Date DEC 2012

Spacing Per City Ordinance 31–210

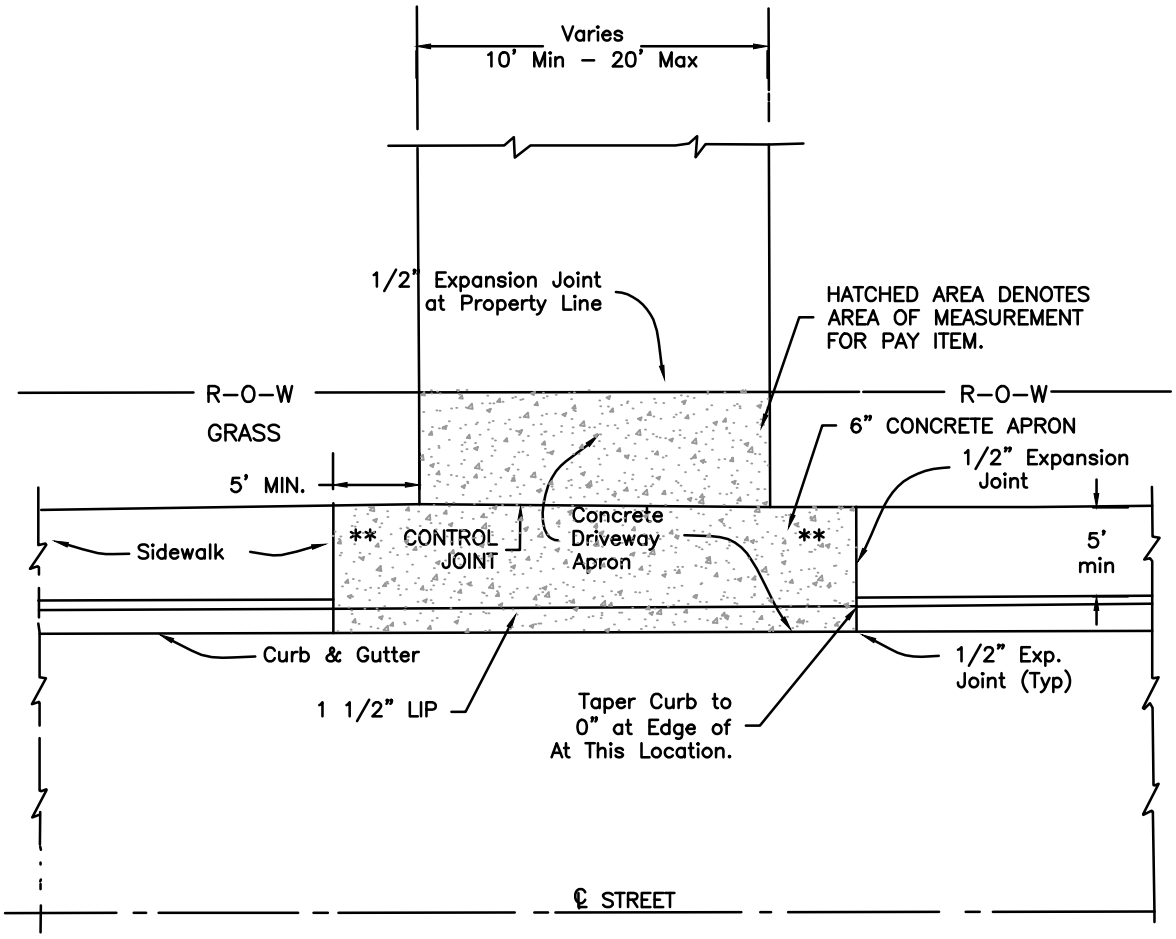

* Sidewalks at back of curb by permission of Department of Public Works (only when conditions dictate).

** Sidewalk area at driveway shall have cross slope of 1:50. See City Ordinance Section 31–210 for permissable driveway slopes.

Thickness and reinforcements are required for conditions & expected wheel loading – 6" minimum thickness.

DRIVEWAY GRADES SHALL BE DESIGNED BY ENGINEER TO KEEP STORMWATER IN STREET, 2% MINIMUM SLOPE AT SIDEWALK CROSSING, MAXIMUM % OF GRADE CHANGE IS 16.

	TITLE		PW–34
	RADIUS DRIVEWAY DETAIL FOR COMMERCIAL DRIVEWAYS (SIDEWALK AWAY FROM CURB)	Issue Date AUG, 2006	Revision Date DEC 2012

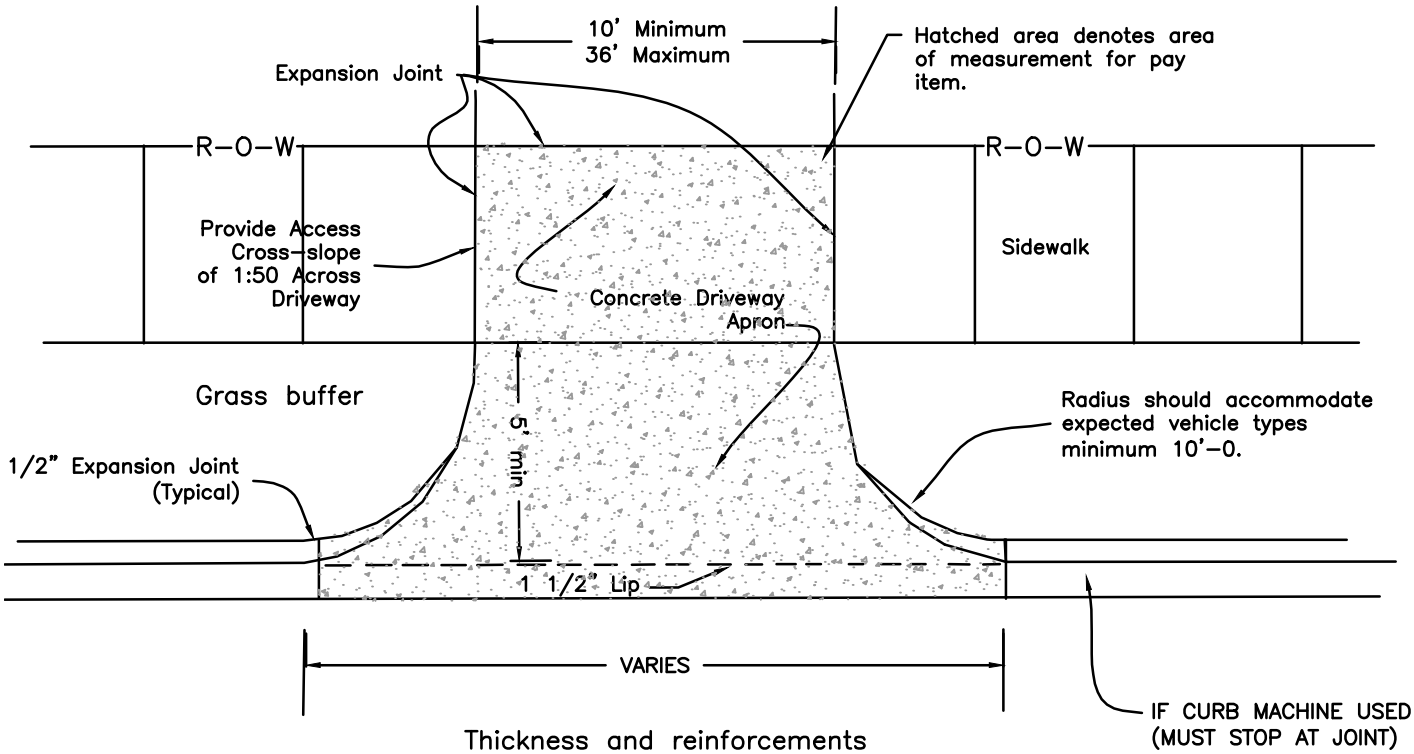

Thickness and reinforcements are required for conditions & expected wheel loading – 8" minimum thickness.

NOTE: Chenal Parkway Design Standards Required for Commercial Drives on Chenal Parkway. (See Master Street Plan)

DRIVEWAY GRADES SHALL BE DESIGNED BY ENGINEER TO KEEP STORMWATER IN STREET, 2% MINIMUM SLOPE AT SIDEWALK CROSSING, MAXIMUM % OF GRADE CHANGE IS 16.

	TITLE		PW–35
	ALLEY TURNOUT	AUG, 2006	Revision Date DEC 2012

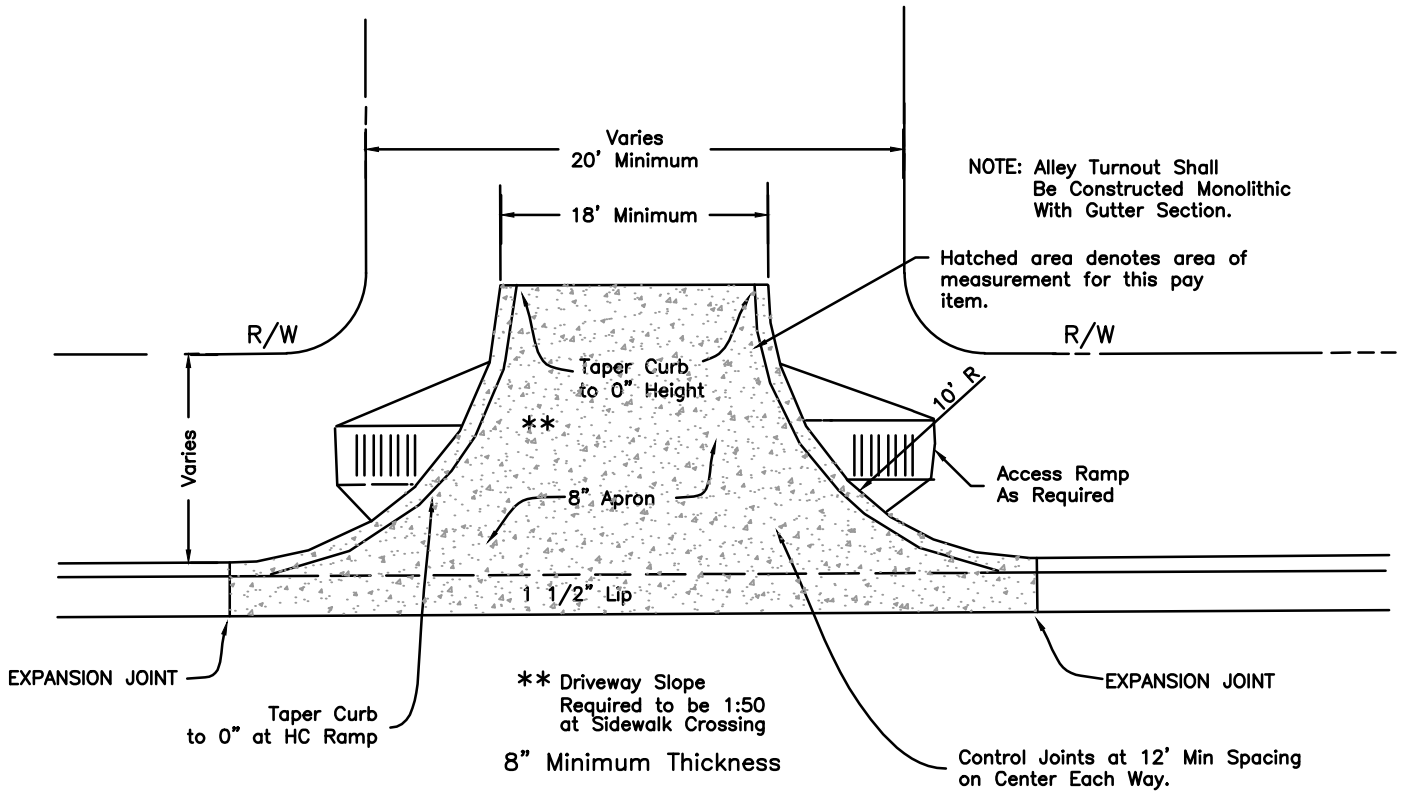

DRIVEWAY GRADES SHALL BE DESIGNED BY ENGINEER TO KEEP STORMWATER IN STREET, 2% MINIMUM SLOPE AT SIDEWALK CROSSING, MAXIMUM % OF GRADE CHANGE IS 16.

	TITLE DRIVEWAY MAXIMUM GRADE DETAIL A		PW–36
		Issue Date AUG, 2006	Revision Date DEC 2012

MAXIMUM GRADES FOR DRIVEWAY WITH 5' SIDEWALK WHICH IS 5' OFF BACK OF CURB

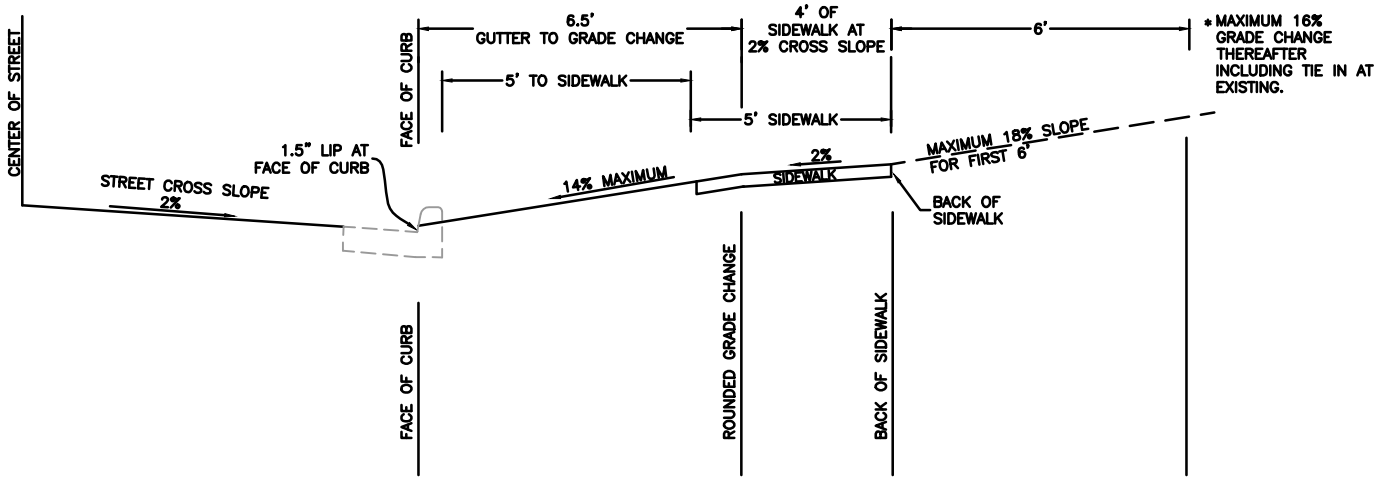

NOTE: 1. ALL GRADE CHANGES SHALL BE ROUNDED OFF WITH A 2' RADIUS.
2. THE MAXIMUM GRADE CHANGE SHALL NOT EXCEED 16%.
3. GRADES SHOWN ARE THE MAXIMUM ALLOWED TO AVOID DRAGGING A VEHICLE. THE GRADES SHALL NOT BE DESIGNED OR USED EXCEPT IN EXTREME CONDITIONS.

	TITLE DRIVEWAY MAXIMUM GRADES DETAIL B		PW-37
		Issue Date AUG, 2006	Revision Date DEC 2012

MAXIMUM GRADES FOR DRIVEWAY WITH 5' SIDEWALK AT BACK OF CURB

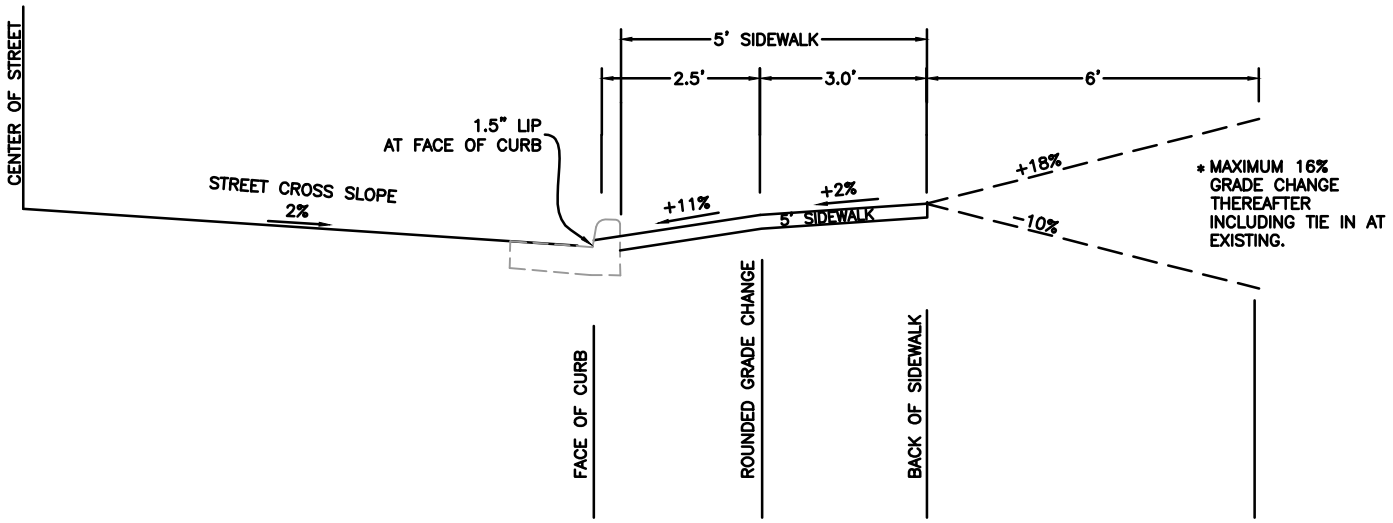

NOTE: 1. ALL GRADE CHANGES SHALL BE ROUNDED OFF WITH A 2' RADIUS.
2. THE MAXIMUM GRADE CHANGE SHALL NOT EXCEED 16%.
3. GRADES SHOWN ARE THE MAXIMUM ALLOWED TO AVOID DRAGGING A VEHICLE. THE GRADES SHALL NOT BE DESIGNED OR USED EXCEPT IN EXTREME CONDITIONS.

	TITLE DRIVEWAY MAXIMUM GRADES DETAIL C		PW–38
		Issue Date AUG, 2006	Revision Date DEC 2012

MAXIMUM GRADES FOR DRIVEWAY WHEN GROUND FALLS AWAY FROM STREET WITH NO SIDEWALK

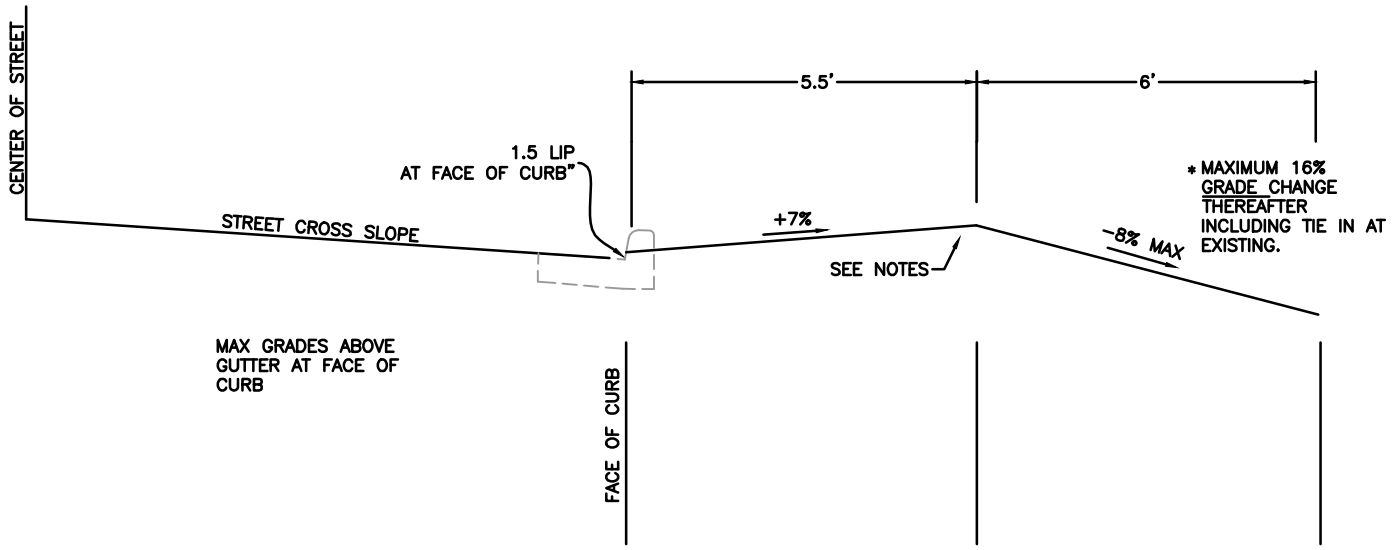

NOTE (1) DRIVEWAY AT 5.5' FROM FACE OF CURB SHALL BE LEVEL WITH TOP OF CURB TO KEEP WATER IN STREET. ANY VARIATION REQUIRES APPROVAL FROM ENGINEER.

(2) ALL GRADE CHANGES SHALL BE ROUNDED OFF WITH A 2' RADIUS.

(3). THE MAXIMUM GRADE CHANGE SHALL NOT EXCEED 16%.

(4). GRADES SHOWN ARE THE MAXIMUM ALLOWED TO AVOID DRAGGING A VEHICLE. THE GRADES SHALL NOT BE DESIGNED OR USED EXCEPT IN EXTREME CONDITIONS.

	TITLE DRIVEWAY MAXIMUM GRADES DETAIL D		PW-39
		Issue Date AUG, 2006	Revision Date DEC 2012

MAXIMUM GRADES FOR DRIVEWAY WHEN GROUND RISES FROM STREET WITH NO SIDEWALK

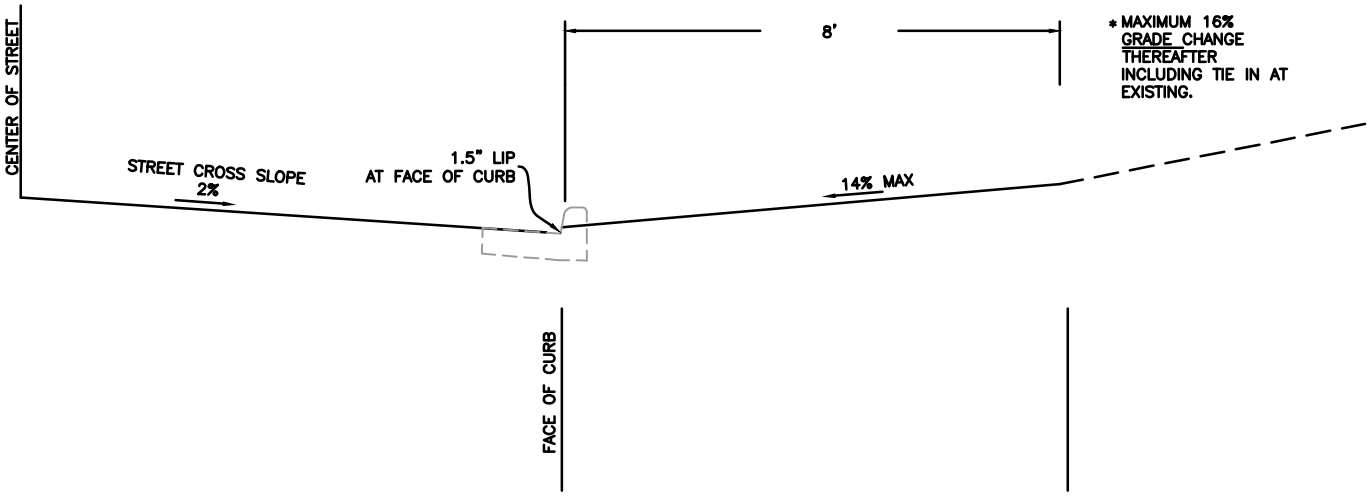

NOTE: 1. ALL GRADE CHANGES SHALL BE ROUNDED OFF WITH A 2' RADIUS.
2. THE MAXIMUM GRADE CHANGE SHALL NOT EXCEED 16%.
3. GRADES SHOWN ARE THE MAXIMUM ALLOWED TO AVOID DRAGGING A VEHICLE. THE GRADES SHALL NOT BE DESIGNED OR USED EXCEPT IN EXTREME CONDITIONS.

	TITLE DRIVEWAY MAXIMUM GRADES DETAIL E		PW-40
		Issue Date AUG, 2006	Revision Date DEC 2012

MAXIMUM GRADES FOR DRIVEWAY WHEN GROUND FALLS AWAY FROM STREET WITH 5' SIDEWALK 5' OFF BACK OF CURB

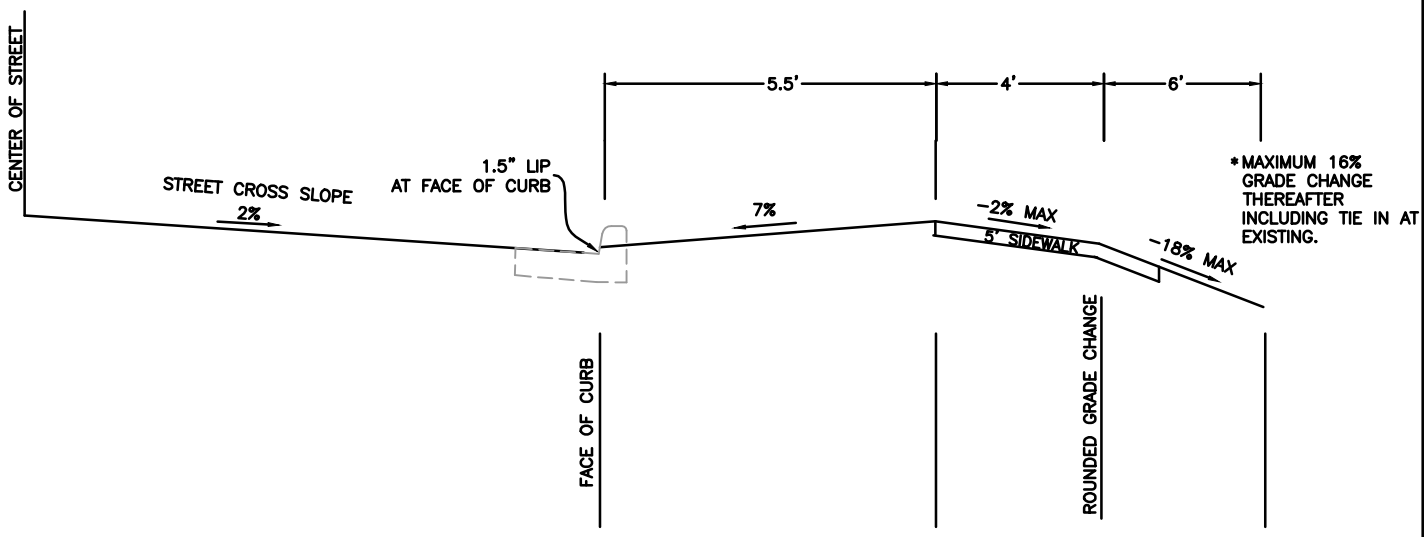

NOTE (1) DRIVEWAY AT 5.5' FROM FACE OF CURB SHALL BE LEVEL WITH TOP OF CURB TO KEEP WATER IN STREET. ANY VARIATION REQUIRES APPROVAL FROM ENGINEER.

(2) ALL GRADE CHANGES SHALL BE ROUNDED OFF WITH A 2' RADIUS.

(3). THE MAXIMUM GRADE <u>CHANGE</u> SHALL NOT EXCEED 16%.

(4). GRADES SHOWN ARE THE MAXIMUM ALLOWED TO AVOID DRAGGING A VEHICLE. THE GRADES SHALL NOT BE DESIGNED OR USED EXCEPT IN EXTREME CONDITIONS.

	TITLE		PW–41
	SIDEWALK DETAILS	Issue Date AUG, 2006	Revision Date DEC 2012

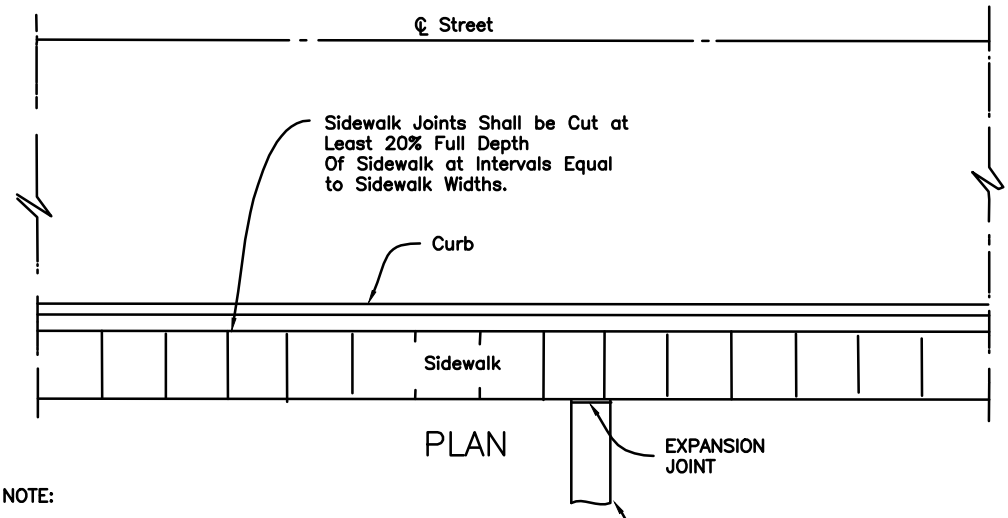

PLAN

NOTE:

(1).1/2" Expansion Joint Spacing at 60' Or adjacent to Structures and Drives.
(2).Sidewalk Expansion Material is Not Required Between Sidewalk and Curb Unless Noted on Plans.
(3).Dowel bars with Expansion Joint Material required at inlets. See PW–42.

Existing Residential Walk. Joint Sealant Shall be Sonneborn SL2 Self Leveling Urethane as Manufactured by Chemrex or Equivalent.

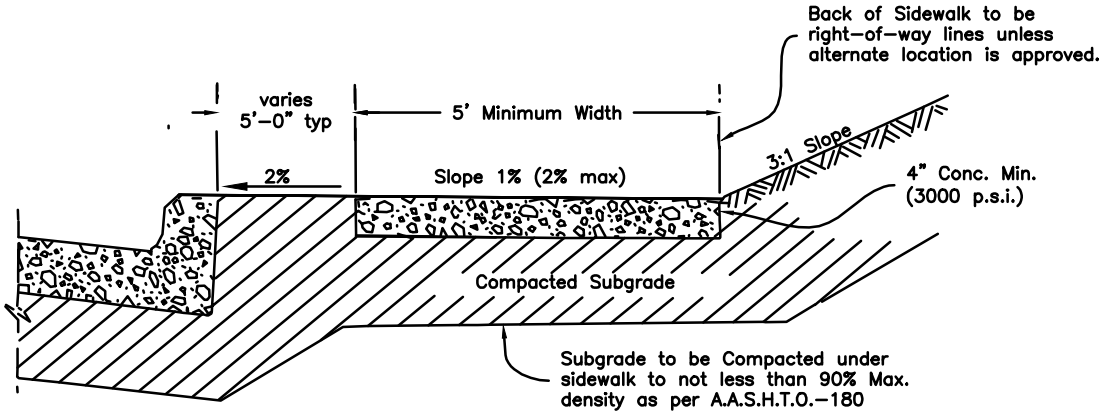

SECTION

Expansion joint shall be installed between public and private sidewalk, buildings or driveways.

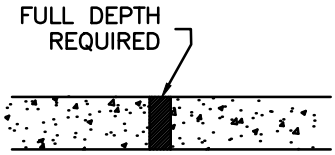

EXPANSION DETAIL

	TITLE		PW–42
	SIDEWALK ADJACENT TO CURB (AT–GRADE SECTION)	Issue Date AUG, 2006	Revision Date DEC 2012

GENERAL NOTE: PUBLIC SIDEWALK SHALL BE BUFFERED FROM STREET. SIDEWALK MAY BE INSTALLED ADJACENT TO CURB ONLY UPON RECIEVING WRITTEN AUTHORIZATION FROM PUBLIC WORKS.

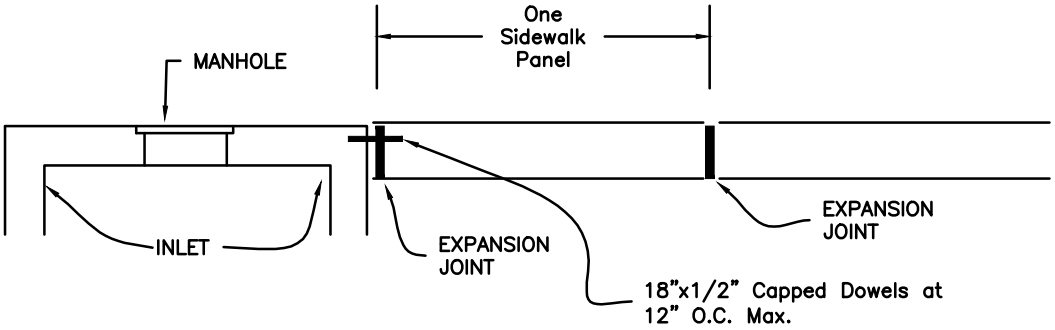

SIDEWALK AT INLETS

NOTE:
1/2" Expansion Joint Spacing at 60' Or adjacent to Structures and Drives.
Sidewalk Expansion Material is Required Between Sidewalks and Inlets.
Dowel bars with Expansion Joint Material required at Inlets.

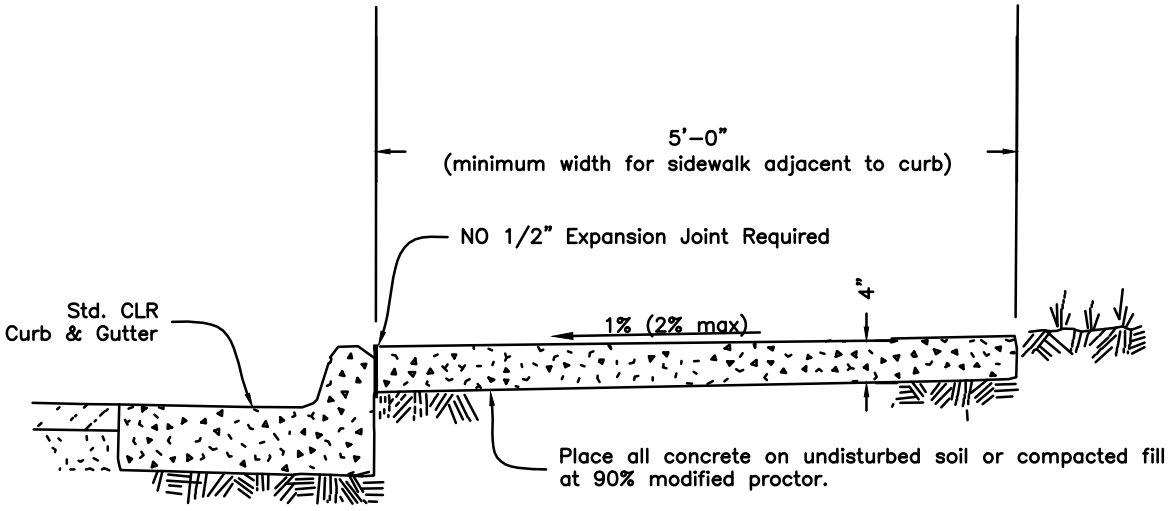

Expansion joint shall be installed between public sidewalks and private sidewalks, buildings or driveways.

	TITLE		PW–43
	SIDEWALK ADJACENT TO CURB (FILL SECTION)	Issue Date AUG, 2006	Revision Date DEC 2012

GENERAL NOTE: PUBLIC SIDEWALK SHALL BE BUFFERED FROM STREET. SIDEWALK MAY BE INSTALLED ADJACENT TO CURB ONLY UPON RECIEVING WRITTEN AUTHORIZATION FROM PUBLIC WORKS.

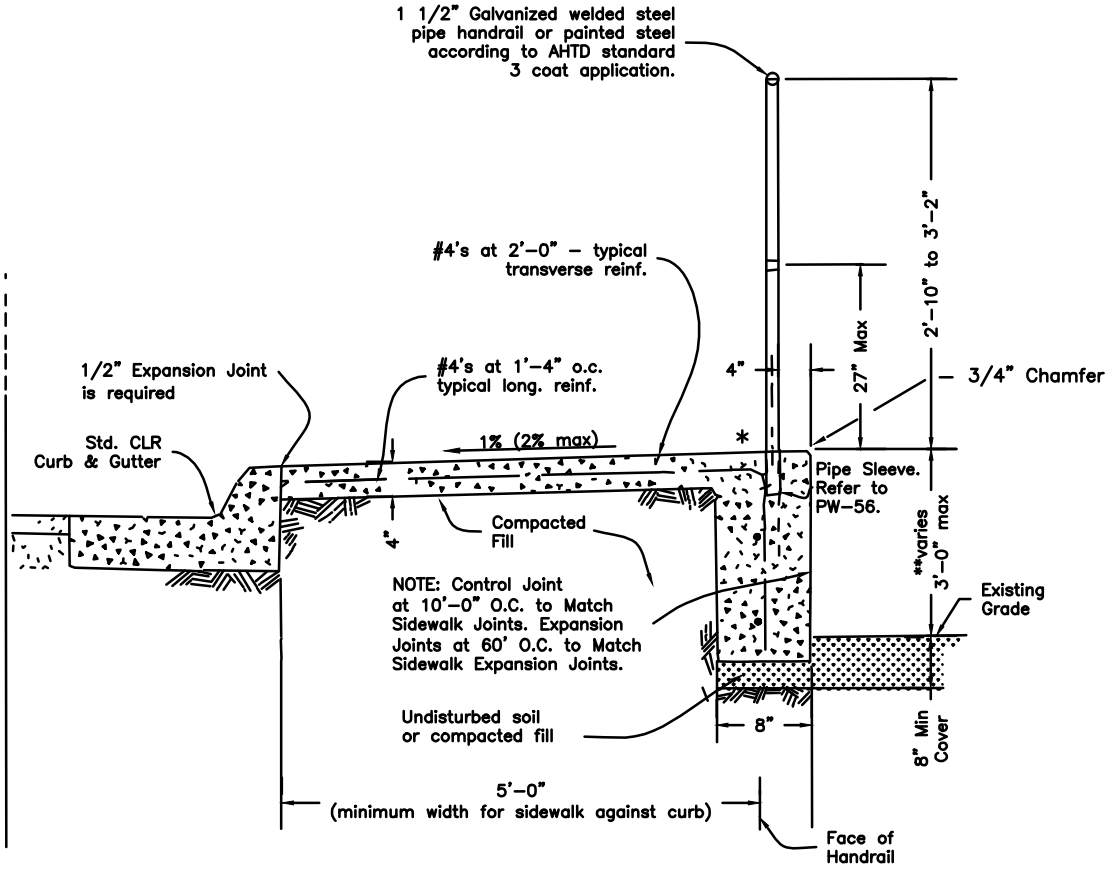

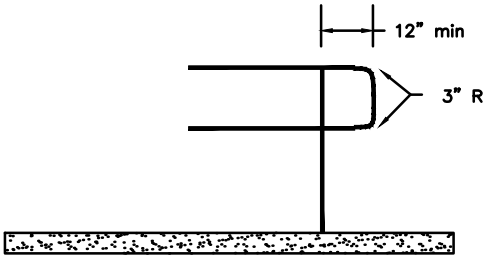

HANDRAIL TERMINATION DETAIL

*NOTE: SUBSTITUTE 6" CURB FOR HANDRAIL WHEN HEIGHT IS LESS THAN 24" ABOVE GRADE.

** INTERGRAL TURNDOWN WALL SHALL NOT EXCEED 3'–0" IN HEIGHT. IF HEIGHTS EXCEEDS 3'–0" THEN RETAINING WALL WITH FOOTING SHALL BE PROVIDED

	TITLE		PW–44
	SIDEWALK ADJACENT (CUT SECTION)	Issue Date AUG, 2006	Revision Date DEC 2012

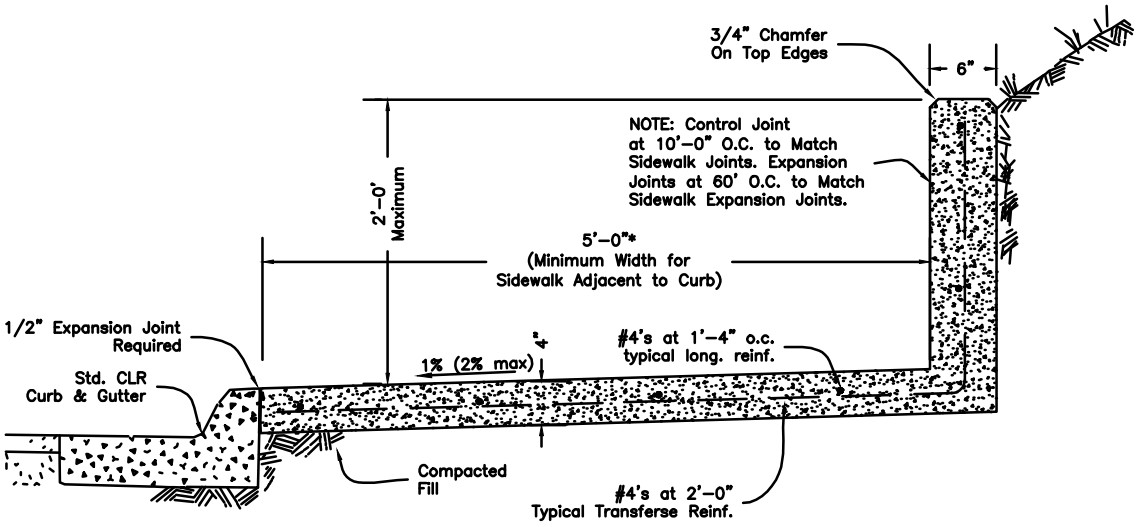

* Minimum Width For Sidewalk Adjacent to Curb On State Or U.S. Highway is 6'–0"

NOTES: Weep holes not required in turnup wall. If height exceeds 2'–0", then this detail is not used. Reatining walls with footing required where height of turnup exceeds 2'–0". Handrail or fencing required where height of turnup exceeds 2'–0".

	TITLE SIDEWALK CROSSOVER BRIDGE DESIGNED FOR 500 L.B. VEHICLE LOAD		PW–46
		Issue Date AUG, 2006	Revision Date DEC 2012

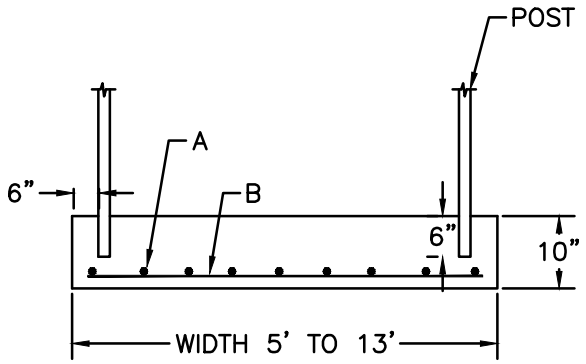

SECTION B–B

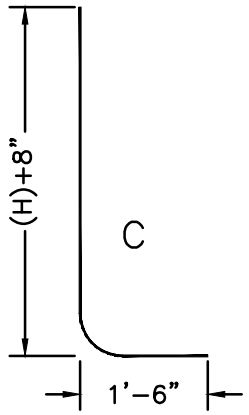

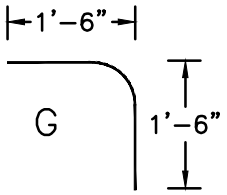

BAR	L	No.
A	(L)+1’–6”	#7@4”
B	(W)–3”	#4@12”
C	(H)+2’–2”	#4@8”
D	(W)–2”	#4@10”
E	3’–10”	#4@8”
F	(W)–3”	#4@12”
G	3’	#4@8”

L : LENGTH OF BRIDGE
W : WIDTH OF BRIDGE

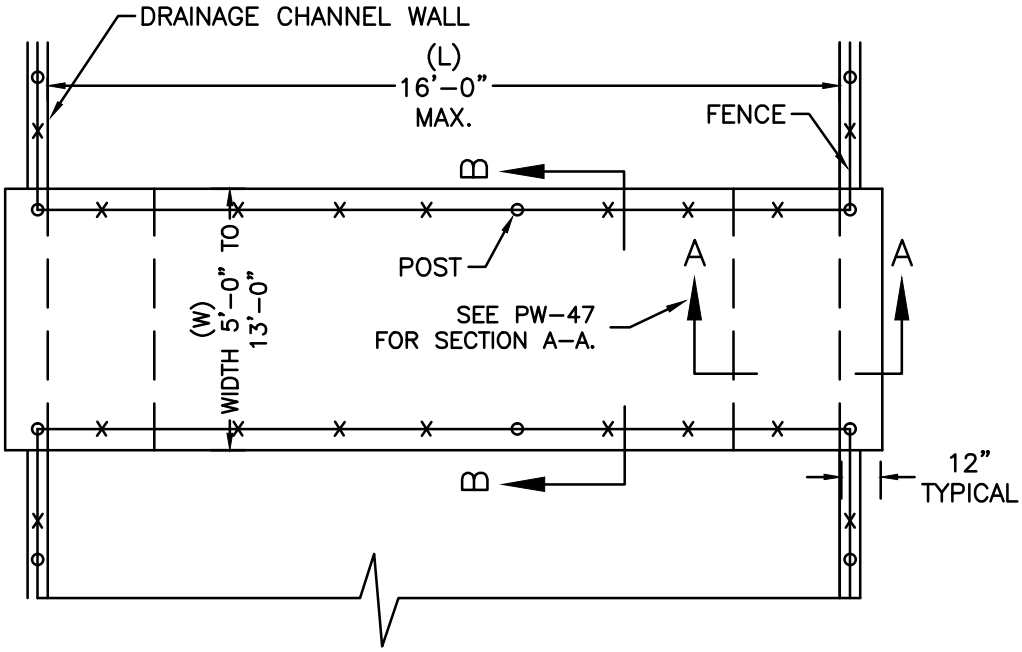

PLAN VIEW

	TITLE		PW-47
	SIDEWALK CROSSOVER BRIDGE DESIGNED FOR 500 L.B. VEHICLE LOAD	Issue Date AUG, 2006	Revision Date DEC 2012

1. SPLICE LENGTH PERMITTED FOR "B","D",AND "F" BARS ONLY AND SHALL BE 18".
2. COMPRESSIVE STRENGTH OF CONCRETE SHALL BE NOT LESS THAN
   4000 p.s.i. FOR BRIDGE SLAB
   3500 p.s.i. FOR BRIDGE FOOTINGS AT PIERS
3. USE DEFORMED BARS GRADE 60
4. ALLOWABLE SOIL BEARING PRESSURE SHALL BE NOT LESS THAN 1000 lb PER SQ.FT.
5. SEE PW-46 FOR REBAR INFORMATION

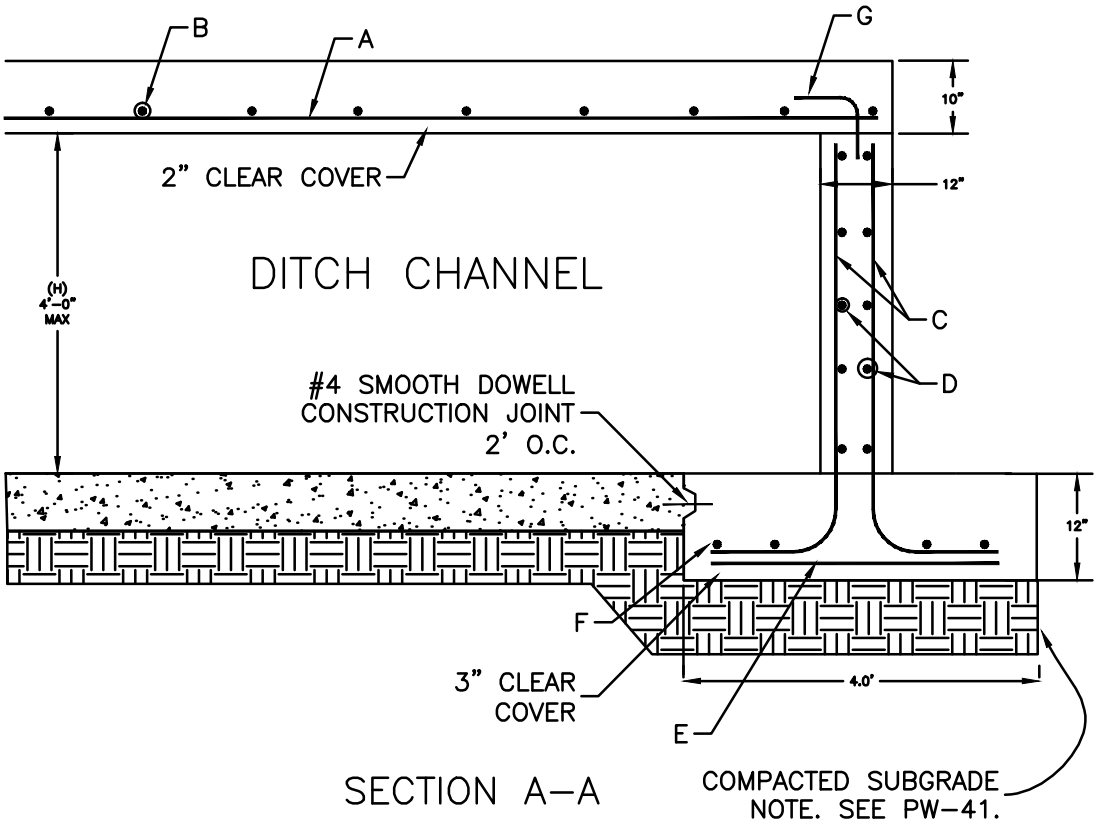

SECTION A-A

	TITLE		PW-48
	ACCESS RAMP (GENERAL NOTES & RAMP CRITERIA)	Issue Date AUG, 2006	Revision Date OCT 2013

(A) THE SLOPE OF THE RAMP SHALL NOT EXCEED 1:12 (8.33%). CONTRACTORS SHOULD FORM RAMPS AT A GRADE LOWER THAN 8.33% TO ALLOW ROOM FOR CONSTRUCTION TOLERANCES. POURING AND FINISHING RAMPS WITHOUT THE AID OF A DIGITAL LEVEL IN CHECKING GRADES IS DISCOURAGED, BECAUSE CONTRACTORS WILL BE REQUIRED TO REMOVE ANY RAMP WITH GRADES EXCEEDING REQUIREMENTS SHOWN IN STANDARD DETAILS. RAMP SURFACE SHALL BE COURSE BROOMED TRANSVERSE TO THE SLOPE. GROOVES/JOINTS ARE NOT TO BE INSTALLED IN THE RAMP SURFACE.

(B) THE MINIMUM THICKNESS OF RAMPS, SIDEWALKS AND LANDING AREAS SHALL BE 4 INCHES. CONCRETE TO BE MINIMUM 3000 p.s.i.. EXPOSED AGGREGATE CONCRETE SHALL NOT BE USED ON SURFACE RAMPS. WIRE REINFORCEMENT IS NOT REQUIRED IN RAMPS OR SIDEWALKS UNLESS SPECIFICALLY STATED IN DESIGN PLANS.

(C) THE MAXIMUM RAMP AND LANDING CROSS-SLOPE SHALL BE 2.0% UNLESS THE STREET GRADE EXCEEDS 2.0%, THEN THE CROSS-SLOPE OF THE RAMP SHALL MATCH THE STREET RUNNING GRADE. DO NOT PROVIDE TRANSITIONAL WARPS IN THE GUTTER, RAMP SURFACE OR LANDING AREA. THE STREET RUNNING GRADE IS MEASURED DIRECTLY IN FRONT OF THE RAMP WITH A 4 FOOT DIGITAL LEVEL AND IS THE GRADE OF THE STREET PERPENDICULAR TO THE RAMP RUNNING SLOPE WHERE THE ASPHALT ABUTS THE GUTTER.

(D) GUTTER SHALL NOT EXCEED 5.0% DIRECTLY IN FRONT OF A CURB RAMP. NO LIP OR VERTICLE SEPARATION SHALL BE INSTALLED BETWEEN THE GUTTER AND THE RAMP.

(E) THE MINIMUM RAMP WIDTH SHALL BE 4 FEET. A THREE FOOT WIDE RAMP IS ACCEPTABLE ONLY IN THE CASE OF AN OBSTRUCTION AND WITH PUBLIC WORKS WRITTEN APPROVAL. CURB RAMPS, SIDEWALKS, MEDIAN CUTS AND CROSSWALKS SHALL BE ALIGNED UNLESS NOT POSSIBLE TO AID IMPAIRED USERS.

(F) RAMP SIDE FLARES SHALL NOT EXCEED 10.0% RELATIVE TO THE STREET. (EXAMPLE: IF THE STREET SLOPE IS 5.0% THEN THE SIDE FLARE SLOPE MAY BE UP TO 15.0% ON THE LOW SIDE TO ALLOW THE THE FLARE TO MATCH CURB HEIGHT IN A REASONABLE DISTANCE. THE SIDE FLARE SLOPE ON THE HIGH SIDE OF THE RAMP WOULD REMAIN AT 10.0% OR LESS GRADE SINCE IT WILL MATCH CURB HEIGHT QUICKLY).

(G) A MINIMUM 3 FOOT LONG SIDEWALK TRANSITION SHALL BE PROVIDED WHEN MATCHING CURB RAMP/LEVEL LANDING TO EXISTING SIDEWALKS WITH CROSS SLOPE EXCEEDING 2.0%. ADDITIONAL TRANSITION LENGTH MAY BE REQUIRED WHEN MATCHING TO EXISTING SIDEWALK WITH SEVERE CROSS SLOPE.

(H) MEDIAN CUTS: SHALL BE 6 FEET WIDE FOR TWO-WAY PEDESTRIAN TRAFFIC ALIGNED WITH CROSSING. MEDIAN CUT CROSS SLOPE SHALL BE MAXIMUM 2.0% OR MATCH STREET GRADE WHEN ROADWAY SLOPE EXCEEDS 2.0%.

(I) RAMP LENGTH IS LIMITED TO 15 FEET.

GENERAL NOTES FOR DETECTABLE WARNING DEVICES

THE DETECTABLE WARNING DEVICE SHALL BE LOCATED SO THAT THE NEAREST EDGE OF THE DEVICE IS 6 TO 8 INCHES FROM THE FACE OF CURB.

TRUNCATED DOMES IN THE DETECTABLE WARNING SURFACE SHALL MEET THE REQUIREMENTS OF THE GEOMETRIC CONFIGURATION SHOWN.

DOMES SHALL BE ALIGNED ON A SQUARE GRID IN THE PREDOMINENT DIRECTION OF TRAVEL TO PERMIT THE WHEELS TO ROLL BETWEEN DOMES.

DETECTABLE WARNING DEVICE SHALL BE 24 INCHES IN THE DIRECTION OF TRAVEL AND EXTEND THE FULL WIDTH OF THE CURB RAMP OR FLUSH SURFACE.

DETECTABLE WARNING DEVICE SHALL BE ON THE AHTD QUALIFIED PRODUCTS LIST FOR CAST-IN-PLACE TACTILE PANELS (ADA DETECTABLE WARNING).

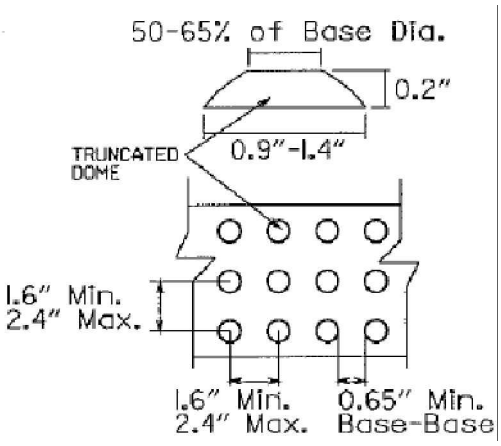

FIRST CHOICE	TYPE 1	CORNER LOCATIONS WITH WALK ADJACENT TO CURB BOTH NEW CONSTRUCTION AND ALTERATIONS
	TYPE 2	CORNER LOCATIONS WITH WALK OFFSET FROM CURB A DISTANCE INSUFFICIENT TO ALLOW REQUIRED RAMP SLOPE (BOTH NEW CONSTRUCTION AND ALTERATIONS)
	TYPE 3	CORNER LOCATIONS WITH WALK OFFSET FROM CURB A DISTANCE SUFFICIENT TO ALLOW REQUIRED RAMP SLOPE (BOTH NEW CONSTRUCTION AND ALTERATIONS)
	TYPE 4	TANGENT LOCATIONS (BOTH NEW CONSTRUCTION AND ALTERATIONS)
SECOND	TYPE 5	TANGENT LOCATIONS (ALTERATIONS ONLY)

	TITLE		PW-49
	ACCESS RAMP TYPE 1	Issue Date AUG, 2006	Revision Date OCT 2013

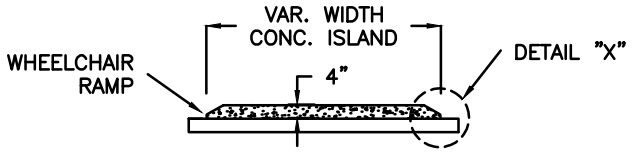

CONCRETE ISLAND DETAIL

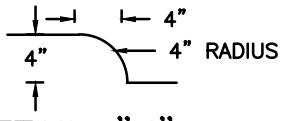

DETAIL "X"

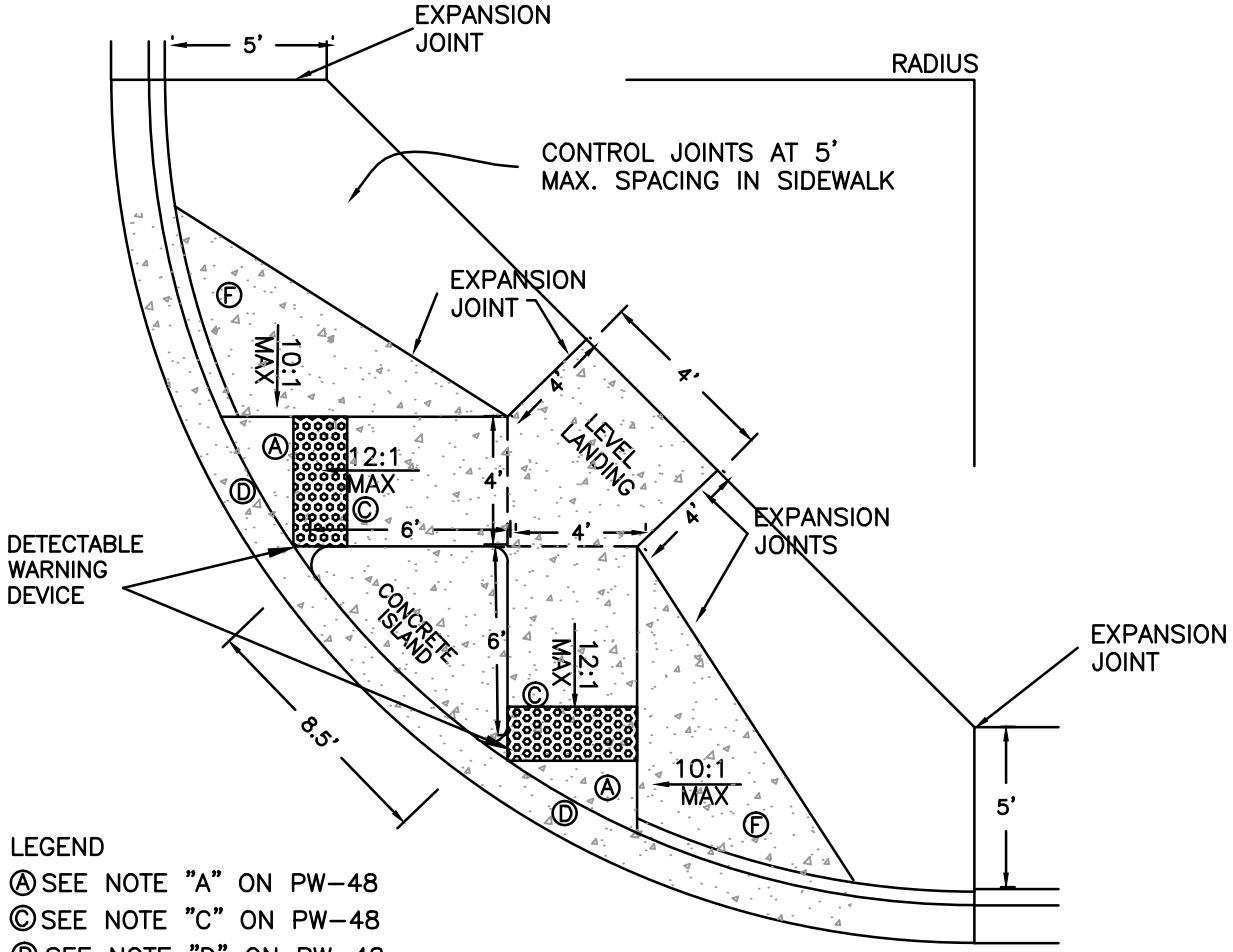

LEGEND

Ⓐ SEE NOTE "A" ON PW-48

Ⓒ SEE NOTE "C" ON PW-48

Ⓓ SEE NOTE "D" ON PW-48

Ⓕ SEE NOTE "F" ON PW-48

DENOTES ACCESS RAMP UNIT PAY AREA

TYPE 1 RAMP
(WALK ADJACENT TO CURB)

	TITLE		PW-50
	ACCESS RAMP TYPE 2 & TYPE 4	Issue Date AUG, 2006	Revision Date OCT 2013

TYPE 2 RAMP

(WALK OFFSET FROM CURB-LANDING REQUIRED)

RAMPS ADJACENT TO GRASS REQUIRE 4" CURB OR 1' FLARE PER PW-51 & PW-52.

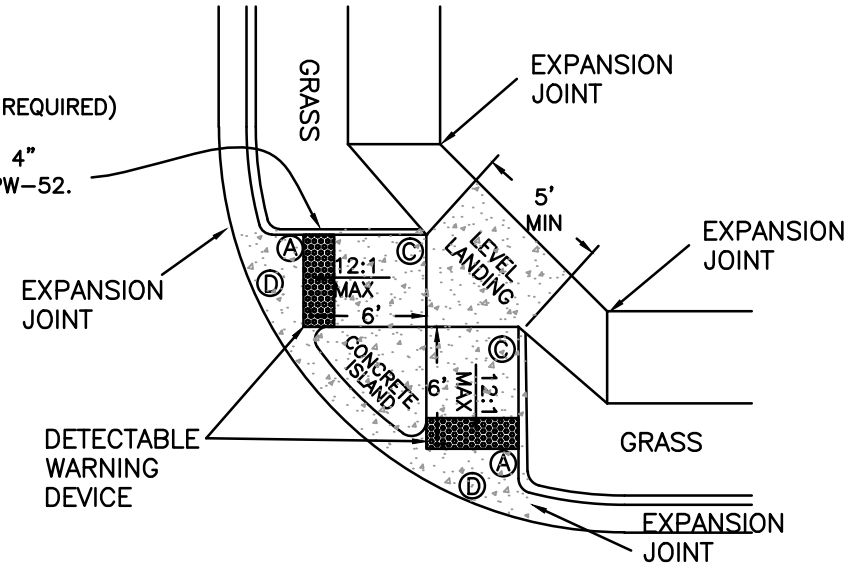

LEGEND

Ⓐ SEE NOTE "A" ON PW-48
Ⓒ SEE NOTE "C" ON PW-48
Ⓓ SEE NOTE "D" ON PW-48
Ⓕ SEE NOTE "F" ON PW-48

DENOTES ACCESS RAMP UNIT PAY AREA

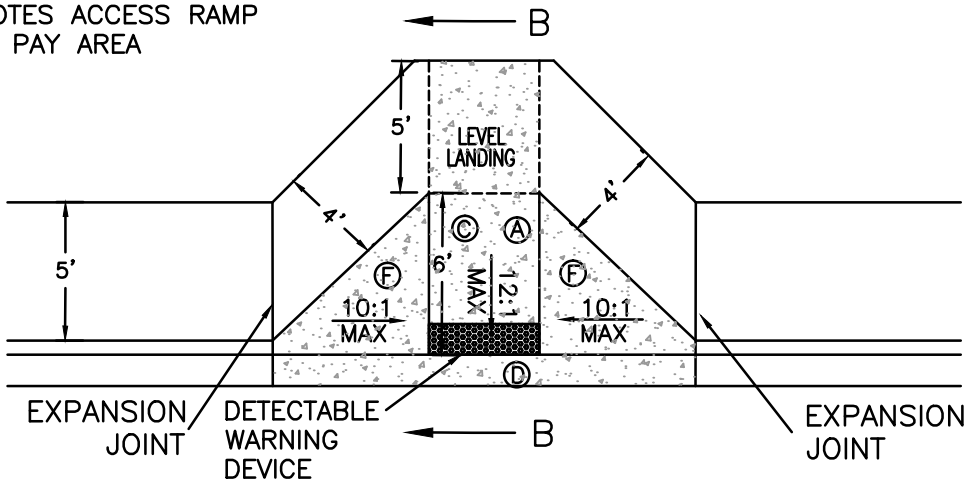

TYPE 4 RAMP

(WALK ADJACENT TO CURB)

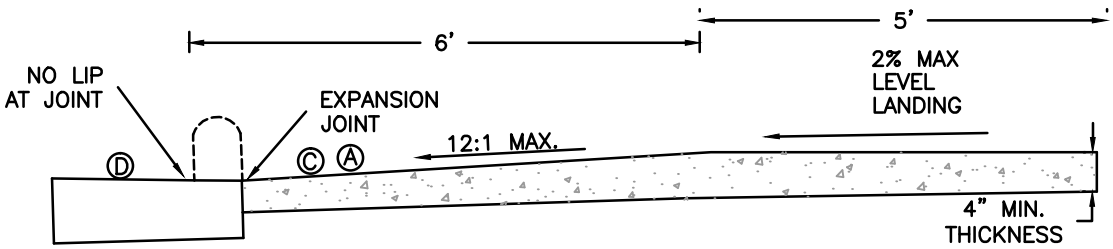

SECTION B-B

	TITLE		PW–51
	ACCESS RAMP TYPE 3 EXPANSION JOINT ALTERNATE 1	Issue Date AUG, 2006	Revision Date OCT 2013

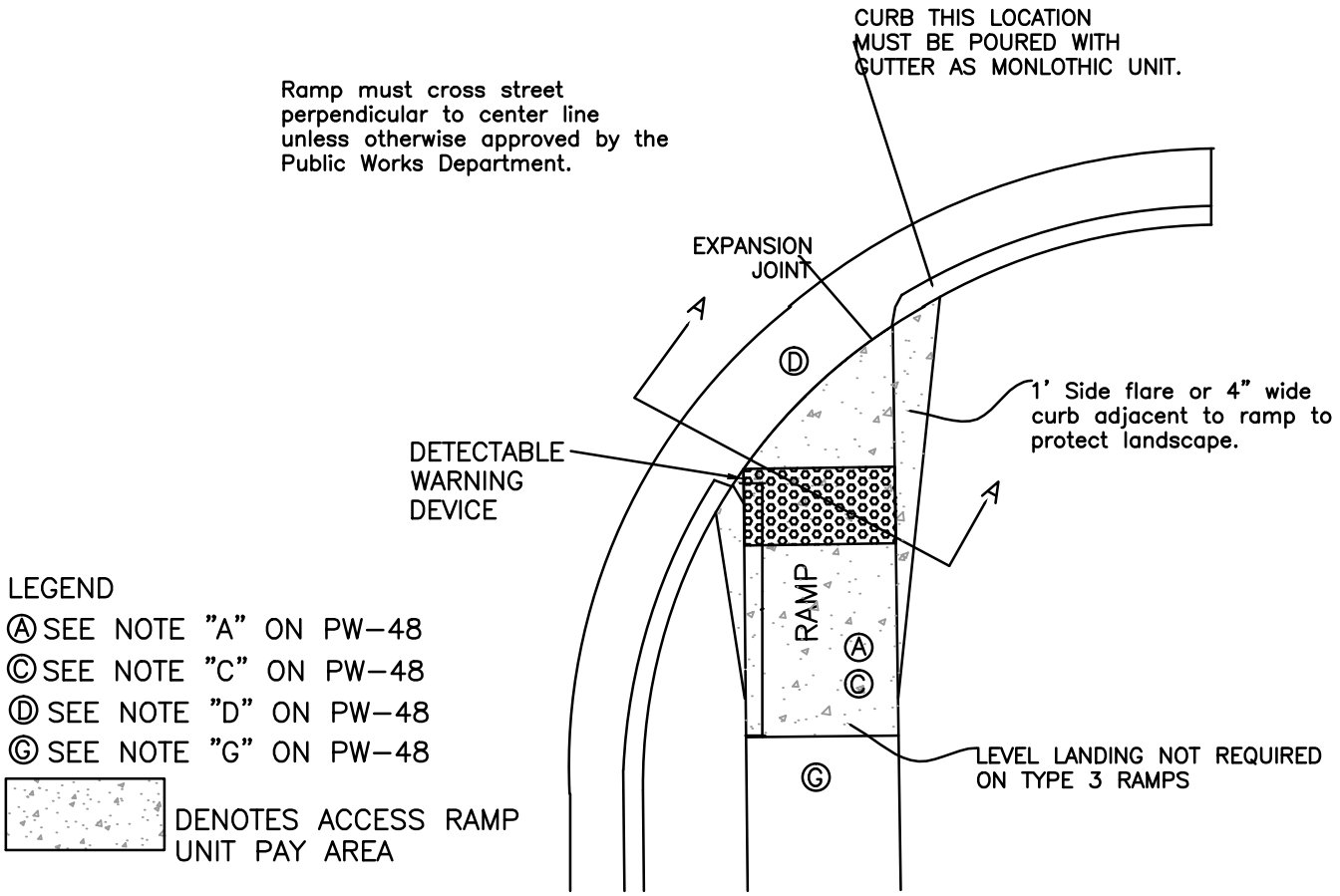

TYPE 3 RAMP
PLAN

EXPANSION JOINT
ALTERNATE 1

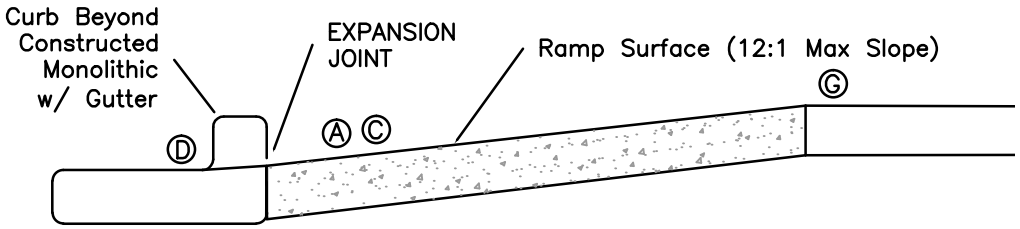

SECTION A–A

	TITLE		PW–52
	ACCESS RAMP TYPE 3 EXPANSION JOINT ALTERNATE 2	Issue Date AUG, 2006	Revision Date OCT 2013

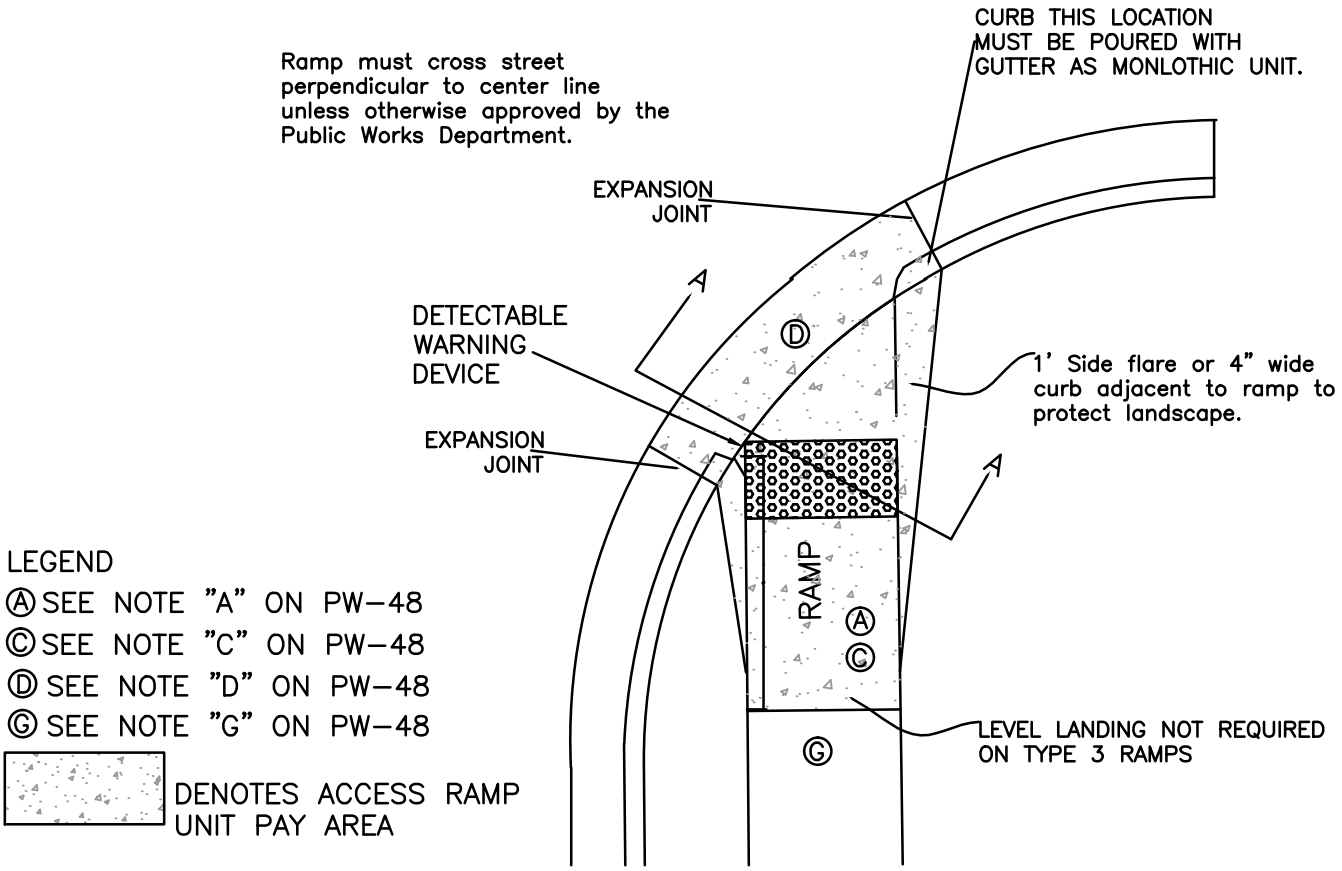

TYPE 3 RAMP
PLAN

EXPANSION JOINT
ALTERNATE 2

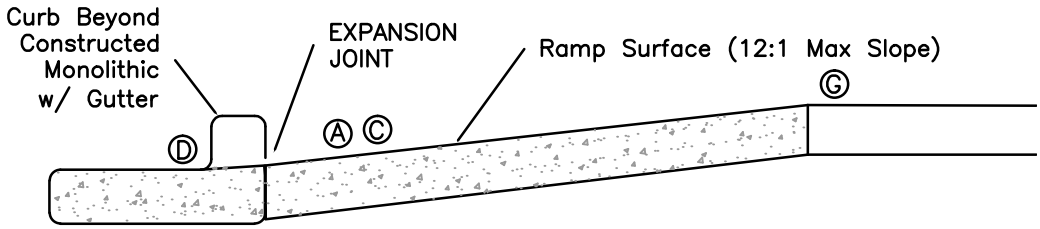

SECTION A–A

	TITLE		PW-53
	ACCESS RAMP TYPE 5	Issue Date AUG, 2006	Revision Date OCT 2013

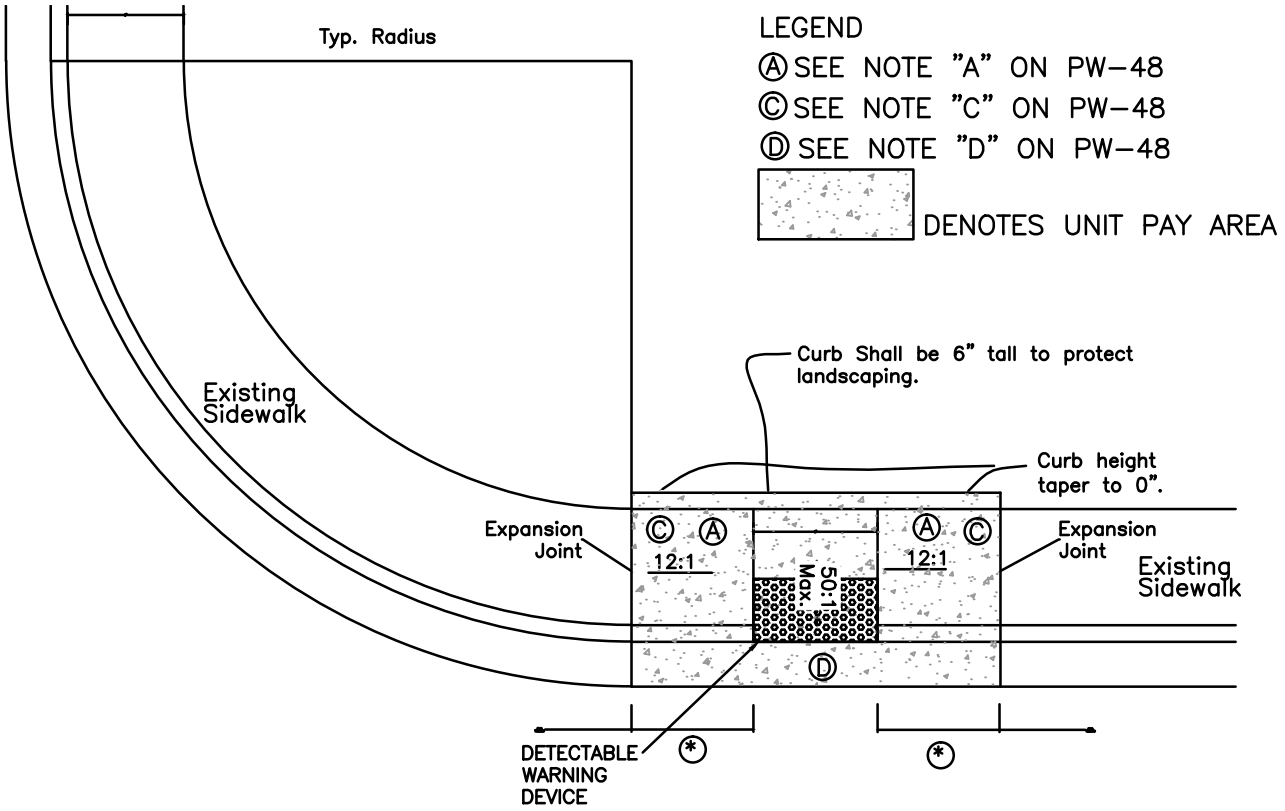

TYPE 5 RAMP

THIS RAMP REQUIRES APPROVAL FROM PUBLIC WORKS DEPARTMENT.

(*) RAMP LENGTH IS NEEDED TO OBTAIN GRADE LESS THAN 12:1 SLOPE, BUT MAXIMUM LENGTH SHALL BE 15 FEET.

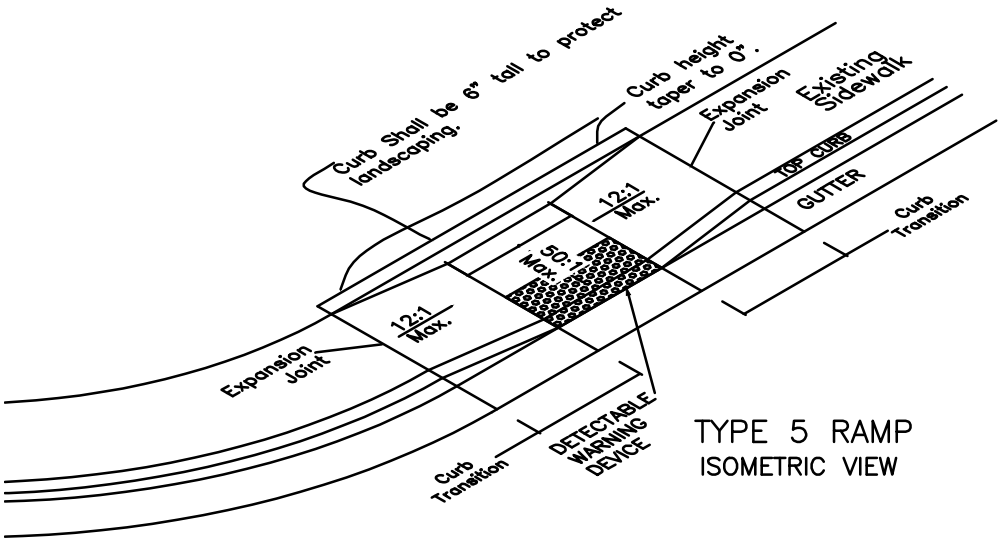

TYPE 5 RAMP
ISOMETRIC VIEW

	TITLE		
	RETAINING WALL DETAILS (8' MAXIMUM HEIGHT)	Issue Date AUG, 2006	PW–54 Revision Date DEC 2012

NOTE: IF WALL HEIGHT EXCEEDS 8' OR IF RETAINED EARTH SLOPES UP EXCEEDING 10% GRADE, THE WALL SHALL BE DESIGNED BY PROFESSIONAL ENGINEER WITH GEOTECHNICAL STUDY.

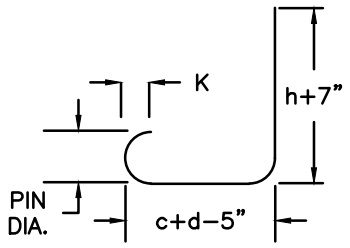

V1 BARS

BENDING DIAGRAM

BAR SIZE	BAR	PIN DIA.
#4	4 1/2"	2 1/2"
#5	5"	3"

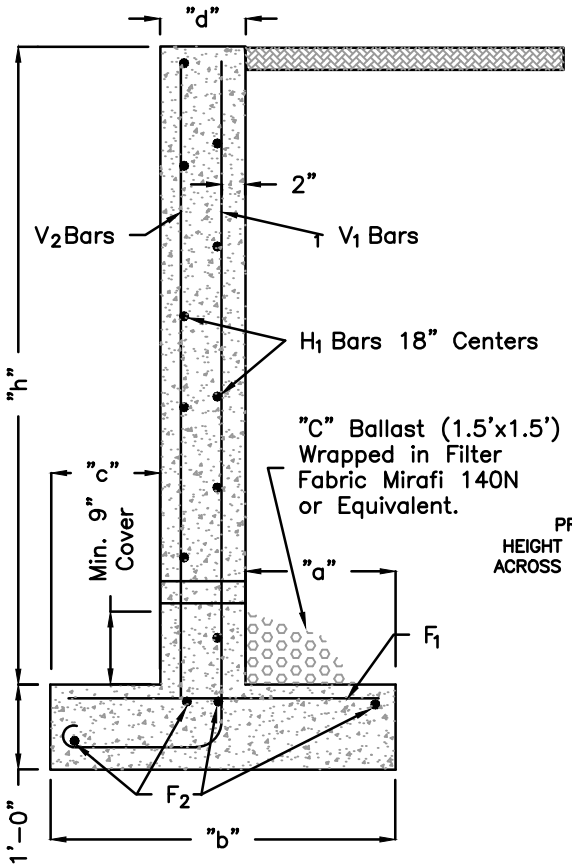

PROVIDE KEYWAY AT BASE OF WALL. KEYWAY NOT REQUIRED ON WALLS LESS THAN 4'.

STEEL SCHEDULE

"h"	"c"	"d"	"a"	"b"	V_1 bars Size	V_1 bars Spacing	F_1 bars Size	F_1 bars Spacing	H_1 #4 bars Spac.	V_2 #4 bars Spac.	F_2 #4 bars No. Req'd
1'–0"	8"	8"	8"	2'–0"	#4	12"	#4	18"	18"	18"	5
2'–0"	8"	8"	8"	2'–0"	#4	12"	#4	18"	18"	18"	5
3'–0"	8"	8"	8"	2'–0"	#4	12"	#4	18"	18"	18"	5
4'–0"	8"	8"	1'-2"	2'–6"	#4	12"	#4	12"	18"	18"	5
5'–0"	8"	8"	1'-8"	3'–0"	#4	9"	#4	9"	18"	18"	5
6'–0"	8"	8"	2'-2"	3'–6"	#4	6"	#4	6"	18"	18"	6
7'–0"	12"	8"	2'-4"	4'–0"	#4	6"	#4	6"	18"	18"	6
8'–0"	12"	8"	2'-10"	4'–6"	#4	6"	#4	6"	18"	18"	6

PROVIDE 3/4" CHAMFER FULL HEIGHT OF WALL (EACH FACE) AND, ACROSS TOP. TOOL JOINT CONCRETE CHANNEL BASE.

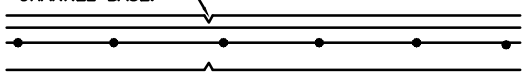

CONTROL JOINT

USED AT 10' O.C. EACH SIDE (TO ALIGN WITH FENCE POSTS)

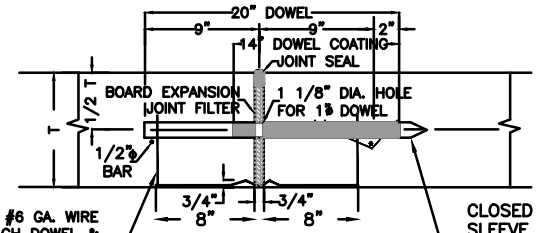

DOWEL BAR CONSTING OF MIN. #6 GA. WIRE CHAIR & DOWEL WOLDER AT EACH DOWEL & TWO 1/2" STEEL BARS AT EACH CHAIR. 3/4" EXPANSION JOINT AT 80' O.C.

CLOSED END DOWEL BAR SLEEVE TO FIT DOWEL AND BE SECURED BY BAR TIE OR WELDING.

EXPANSION JOINT

(DOWEL BARS TO BE 12" ON CENTER)

REINFORCED CONCRETE RETAINING WALL

2" WEEP HOLES (MAX. SPACING 10'–0" CTRS.) TO BE PLACED TO ALIGN WITH CONTROL JOINTS.
ALL EXPOSED EDGES TO BE CHAMFERED 3/4".

	TITLE		PW–56
	PIPE SLEEVE DETAIL	Issue Date AUG, 2006	Revision Date DEC 2012

FENCE POST TO BE ALIGNED WITH CONTROL JOINTS.
SEE PW–59 FOR DETAIL OF FENCE POST AT EXPANSION JOINT.

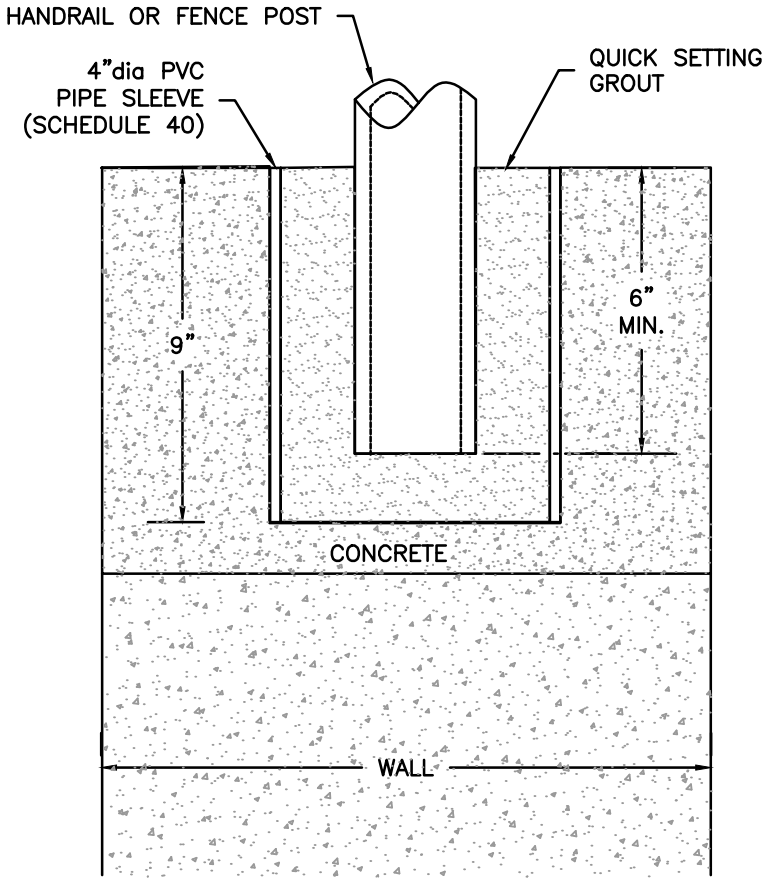

	TITLE		
	WOOD FENCE DETAIL (WITH WOOD POST)	Issue Date AUG, 2006	PW–57 Revision Date MAR, 2013

NOTES:

*ALL FASTENING HARDWARE TO BE NON–CORROSIVE
*CONTRACTOR SHALL USE 8p. GALVANIZED SIDING NAILS OR 2" GALVANIZED SCREWS THROUGHOUT.
*ALL WOOD MEMBERS SHALL BE TREATED.

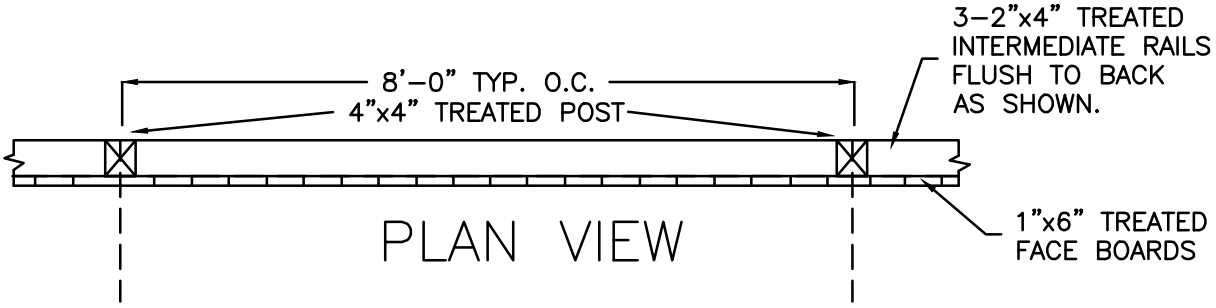

PLAN VIEW

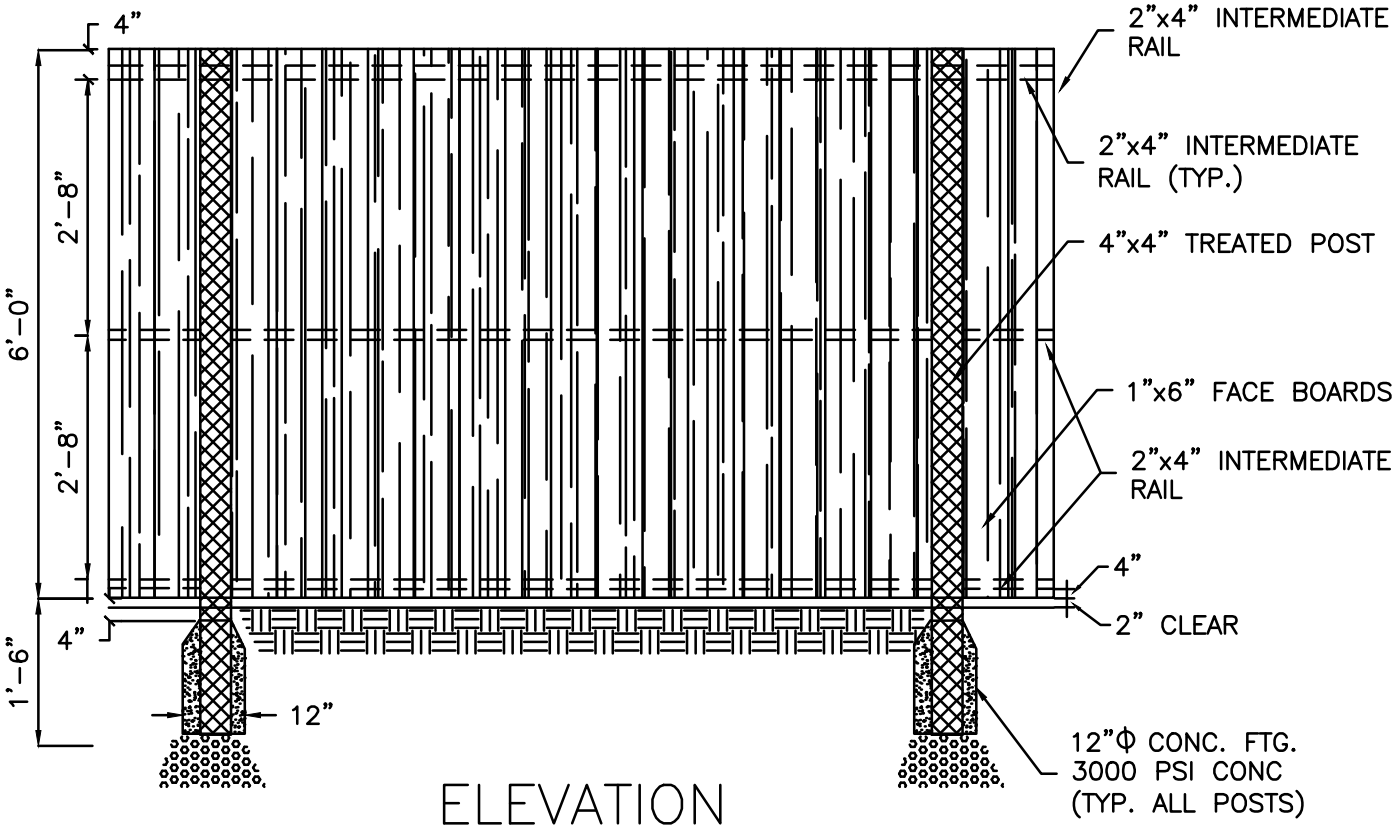

ELEVATION

N.T.S.

	TITLE		PW-58
	WOOD FENCE DETAIL (WITH METAL POST)	Issue Date AUG, 2006	Revision Date MAR, 2013

NOTES:

*ALL FASTENING HARDWARE TO BE NON-CORROSIVE
*CONTRACTOR SHALL USE 8p. GALVANIZED SIDING NAILS OR 2" GALVANIZED SCREWS THROUGHOUT.
*ALL WOOD MEMBERS SHALL BE TREATED.

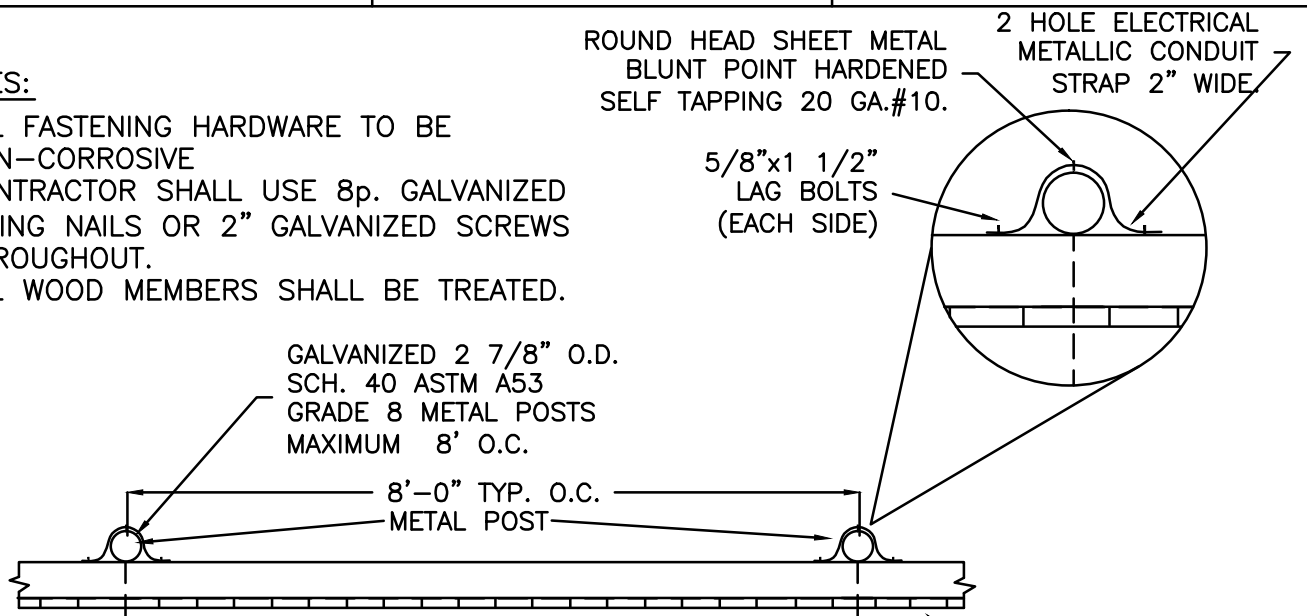

PLAN VIEW

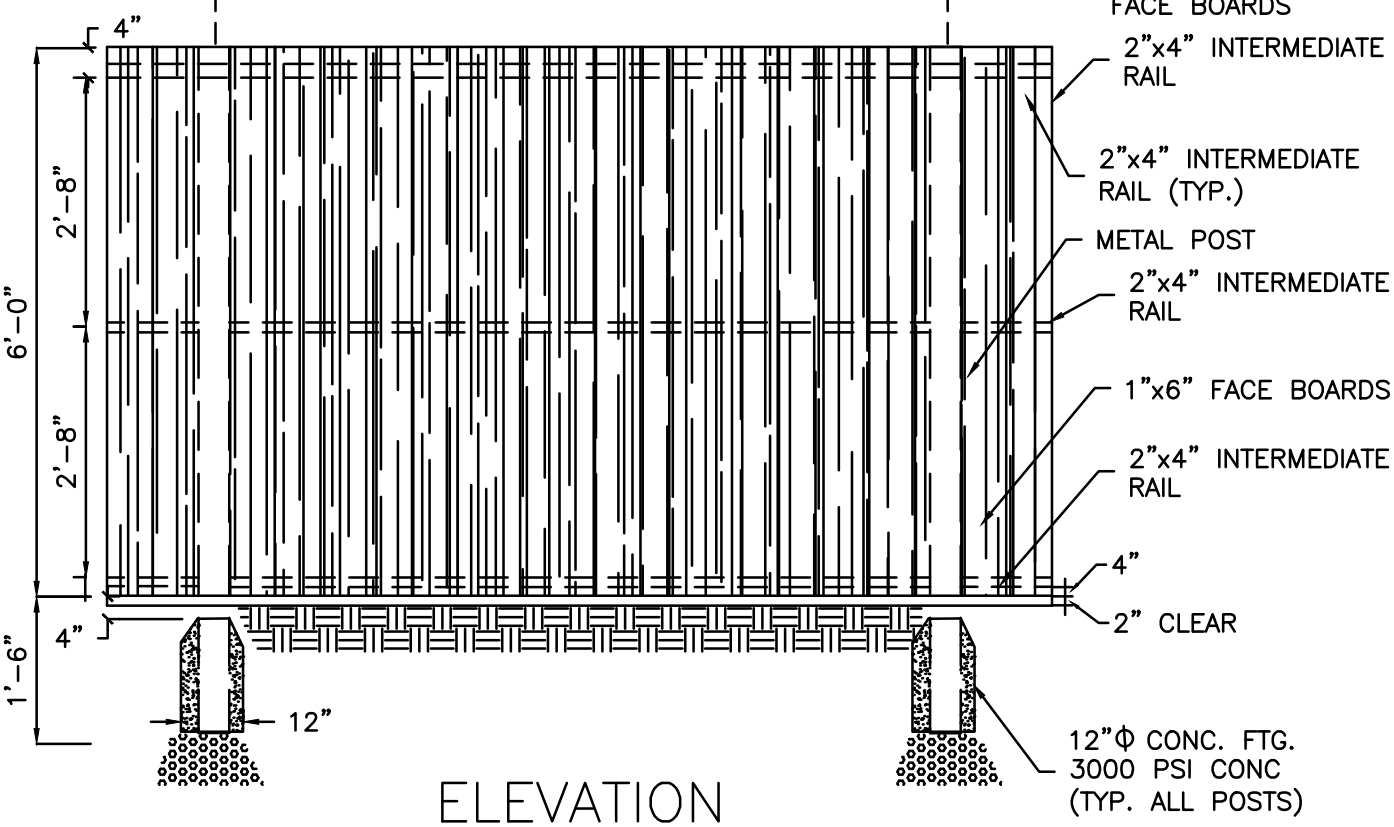

ELEVATION

N.T.S.

	TITLE		PW–59
	FENCE POST FLANGE DETAIL AT EXPANSION JOINT	Issue Date AUG, 2006	Revision Date MAR, 2013

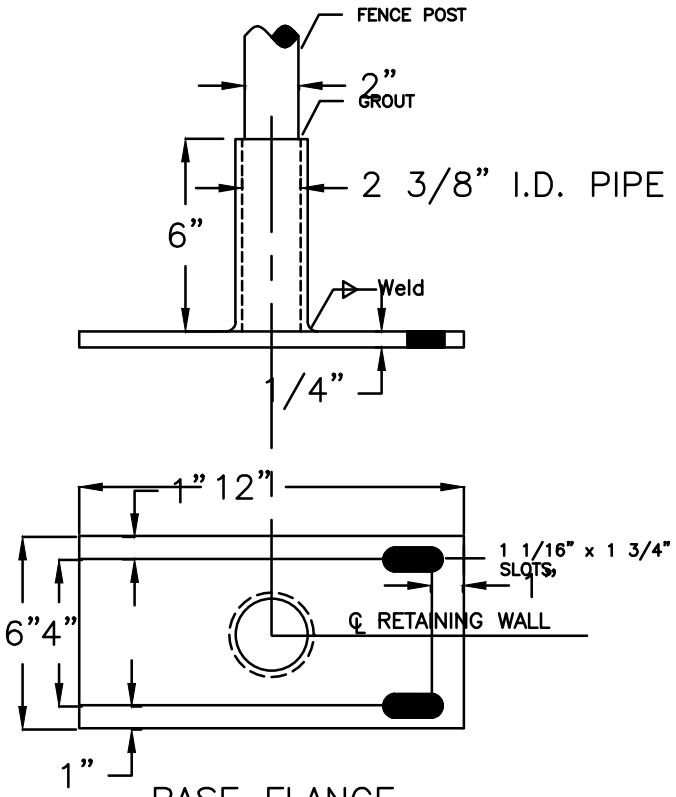

BASE FLANGE

BASE FLANGE SHALL BE GALVANIZED

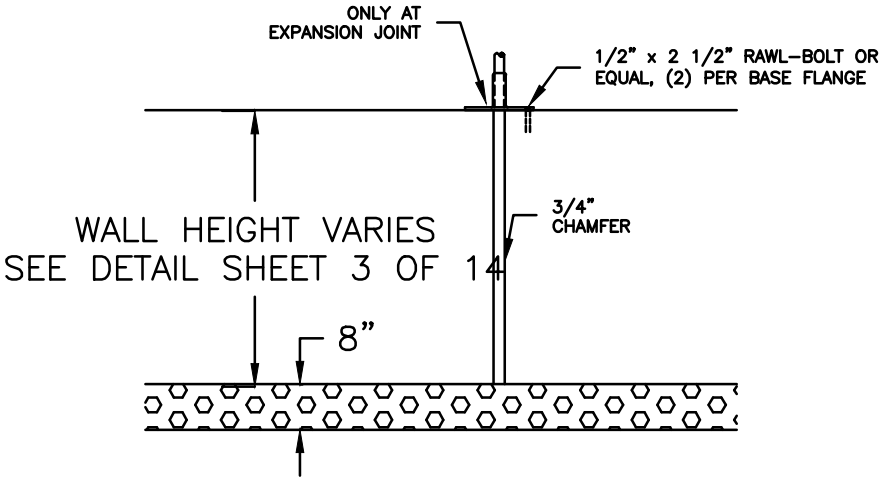

BASE FLANGE LOCATION

	TITLE		PW–60
	GROUTED RIP–RAP EMBANKMENT DETAILS	Issue Date AUG, 2006	Revision Date MAR, 2013

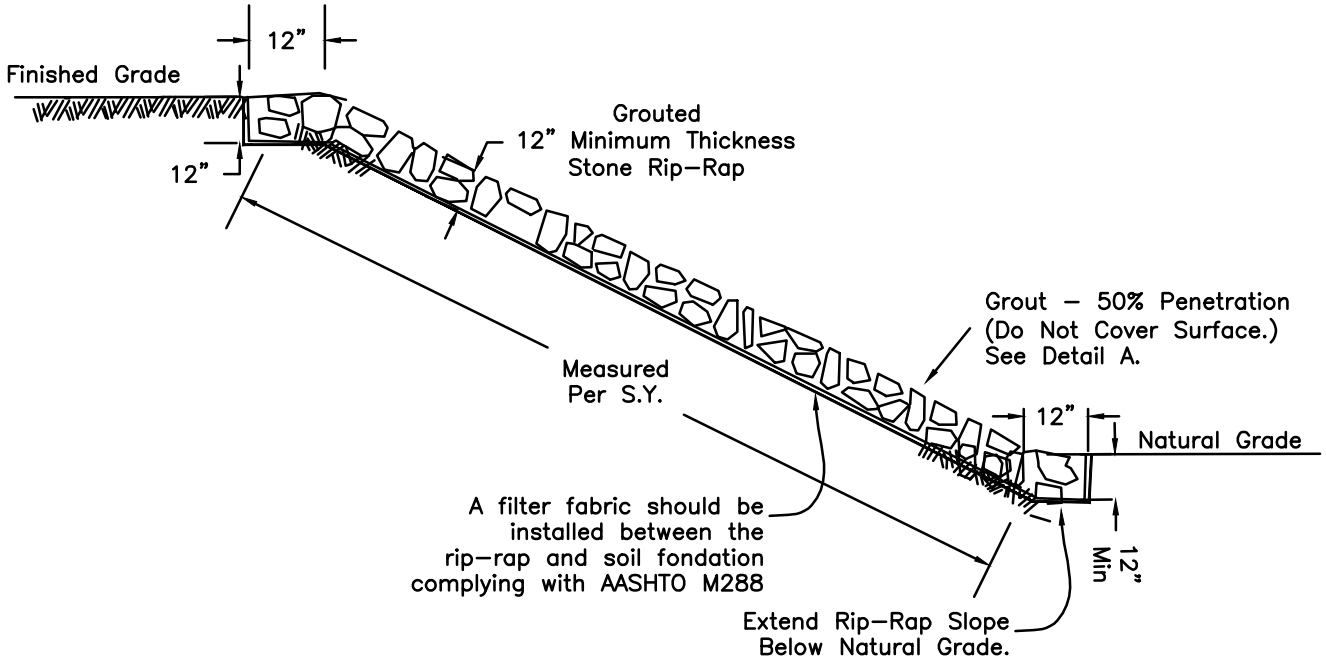

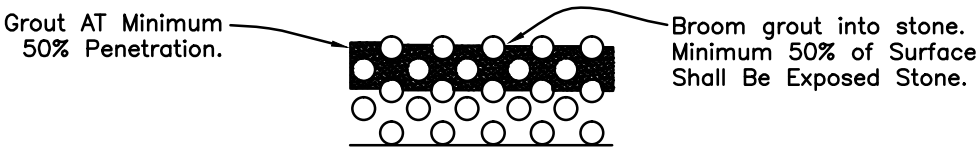

DETAIL A

% STONE	WEIGHT OF PIECES IN POUNDS
NOT MORE THAN 15	75–150
40–45	25–75
30–35	6–25
NOT MORE THAN 15	LESS THAN 6

	TITLE		
	SLOPE ROUNDING DETAIL		PW–61
		Issue Date AUG, 2006	Revision Date MAR, 2013

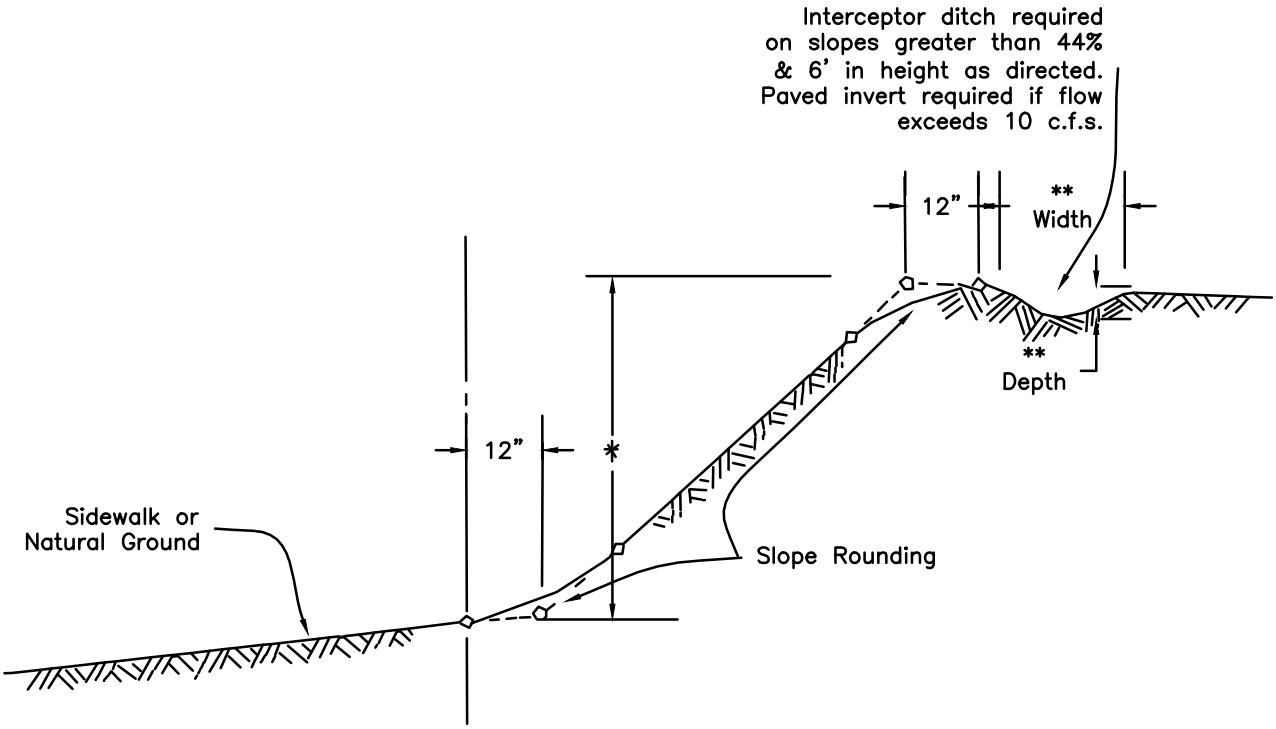

SLOPE ROUNDING

(TYPICAL ON ALL CUT OR FILL SLOPES)

* Maximum height 15'–0" unless midheight 10' terraces utilized according to Section 29 of Little Rock Code of Ordinances.

** INTERCEPTOR DITCH SIZE SHALL BE DETERMINED BY ENGINEER

	TITLE		PW–62
	END SECTION RIP RAP PLACEMENT DOWNSTREAM END	Issue Date AUG, 2006	Revision Date MAR, 2013

Pipe Outlet to Flat Area-
No Well-defined Channel

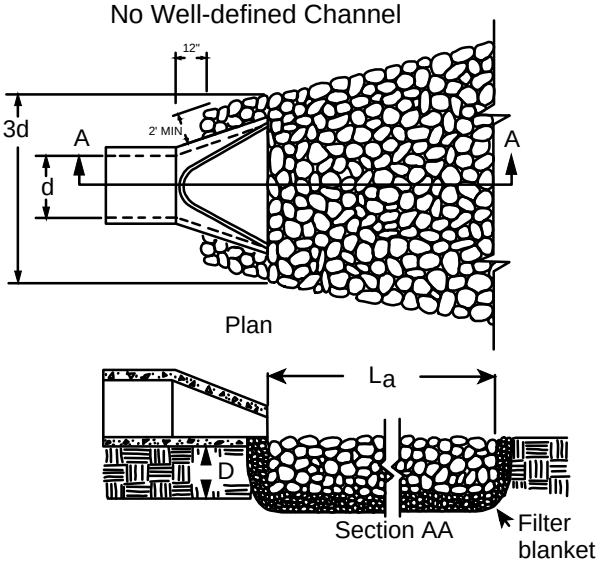

Pipe Outlet to Well-defined
Channel

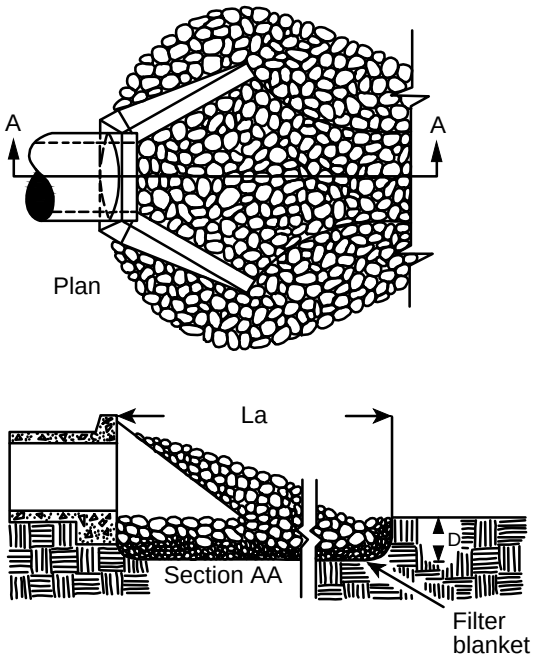

Notes

1. L_a is the length of the riprap apron. Please see design plans for length.
2. D = 1.5 times the maximum stone diameter but not less than 6".
3. In a well-defined channel extend the apron up the channel banks to an elevation of 6" above the maximum tailwater depth of to the top of the bank, whichever is less.
4. A filter blanket or filter fabric should be installed between the riprap and soil foundation complying with AASHTO M288.
5. Please see detail PW-60 for grouting.

	TITLE		PW-63
	SILT FENCE	Issue Date AUG, 2006	Revision Date MAR, 2013

NOTES:

1. GEOTEXTILE FABRIC (TYPE 4) IN ACCORDANCE WITH SECTION 625 (AHTD SPECS).

2. TYPE A – USE ON SMALL DEVELOPMENTS WHERE THE LIFE OF THE PROJECT IS LESS THAN SIX MONTHS AND THE SLOPE GRADIENT IS LESS THAN 3:1.

3. TYPE B – USE ON DEVELOPMENTS WHERE THE LIFE OF THE PROJECT IS GREATER THAN SIX MONTHS AND WHERE THE SLOPE GRADIENT IS 3:1 OR GREATER.

4. TYPE C – USE WHERE SLOPES EXCEED A VERTICAL HEIGHT OF 20 FEET AND THE SLOPE GRADIENT IS STEEPER THEN 3:1.

5. INSPECT BARRIERS AT THE END OF EACH WORKING DAY, OR AFTER EACH RAIN, AND REPAIR OR CLEAN AS NECESSARY.

6. REMOVE SEDIMENT FROM BARRIER WHEN ONE HALF FULL.

7. DISPOSE OF SEDIMENT AND STABILIZE IT WITH VEGETATION.

8. REPLACE FILTER FABRIC WHEN DETERIORATED.

9. DESIGN LIFE OF A SYNTHETIC SILT FENCE IS APPROXIMATELY 6 MONTHS.

10. MAINTAIN UNTIL THE PROJECT IS VEGETATED OR OTHERWISE STABILIZED.

11. REMOVE BARRIERS AND ACCUMULATED SEDIMENT AND STABILIZE THE EXPOSED AREA WHEN THE PROJECT IS STABILIZED.

12. SILT FENCE SHALL BE INSTALLED ALONG THE CONTOUR, NEVER UP OR DOWN A SLOPE.

13. THE MAXIMUM DRAINAGE AREA FOR A CONTINUOUS FENCE WITHOUT BACKING SHALL BE 1/4 ACRE PER 100 LINEAR FEET OF FENCE LENGTH, UP TO A MAXIMUM AREA OF 2 ACRES. THE MAXIMUM SLOPE LENGTH BEHIND THE FENCE ON THE UPSLOPE SIDE SHOULD BE 110 FEET (AS MEASURED ALONG THE GROUND SURFACE).

14. THE MAXIMUM DRAINAGE AREA FOR A CONTINUOUS SILT FENCE WITH BACKING SHALL BE 1 ACRE PER 150 LINEAR FEET OF FENCE LENGTH. THE SLOPE LENGTH ABOVE THE SILT FENCE WITH BACKING SHOULD BE NO MORE THAN 300 FEET.

	TITLE		
	SILT FENCE		PW-63
		Issue Date AUG, 2006	Revision Date MAR, 2013

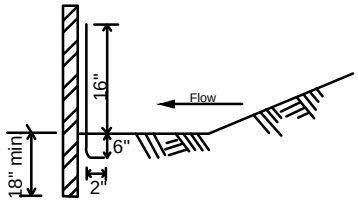

SIDE VIEW

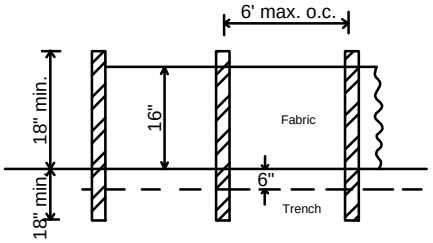

FRONT VIEW

NOTE:

Use wood or steel posts

SF-A SILT FENCE (TYPE A)
NTS

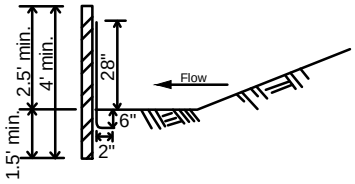

SIDE VIEW

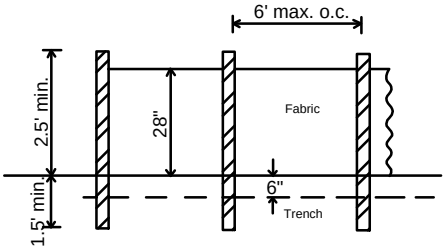

FRONT VIEW

NOTE:

Use wood or steel posts

SF-B SILT FENCE (TYPE B)
NTS

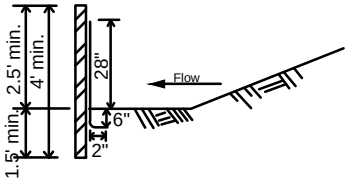

SIDE VIEW

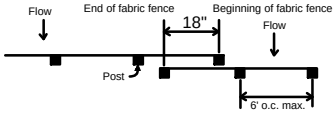

TOP VIEW - (Not to scale)

OVERLAP AT FABRIC ENDS

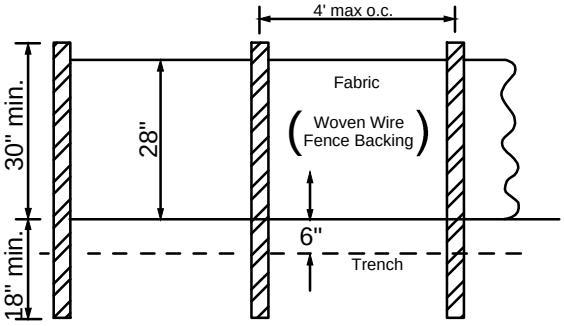

FRONT VIEW

NOTE:

Use steel posts.- only

SF-C SILT FENCE (TYPE C)
NTS

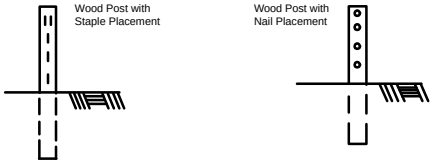

FRONT VIEWS

FASTENERS FOR SILT FENCES

	TITLE		PW-64
	CONSTRUCTION EXIT	Issue Date AUG, 2006	Revision Date MAR, 2013

1. LOCATE STONE STABILIZED PAD AT ANY POINT WHERE VEHICULAR TRAFFIC WILL BE LEAVING THE CONSTRUCTION SITE ONTO A PUBLIC RIGHT-OF-WAY, STREET, ALLEY, SIDEWALK, OR PARKING AREA OR ANY OTHER AREA WHERE THERE IS A TRANSITION FROM BARE SOIL TO A PAVED AREA.
2. WIDTH – 20'-0 MINIMUM BUT NOT LESS THAN FULL WIDTH OF ALL POINTS OF VEHICULAR EGRESS. LENGTH – 50'-0 MINUMUM
3. MAINTAIN THE EXIT TO PREVENT TRACKING OR FLOW OF MUD ONTO PUBLIC RIGHTS- OF-WAY. PROVIDE PERIODIC TOP DRESSING WITH 1.5 – 3.5" STONE, AS CONDITIONS DEMAND. IMMEDIATELY REMOVE ALL MATERIALS SPILLED, DROPPED, WASHED, OR TRACKED FROM VEHICLE OR SITE ONTO ROADWAY OR INTO STORM DRAINS. CLEAN WHEELS TO REMOVE MUD PRIOR TO ENTRANCE ON TO PUBLIC RIGHTS-OF-WAY.
4. WHEN WASHING IS REQUIRED, DO SO ON AREAS STABILIZED WITH CRUSHED STONE DRAINING INTO AN APPROVED SEDIMENT TRAP OR SEDIMENT BASIN.

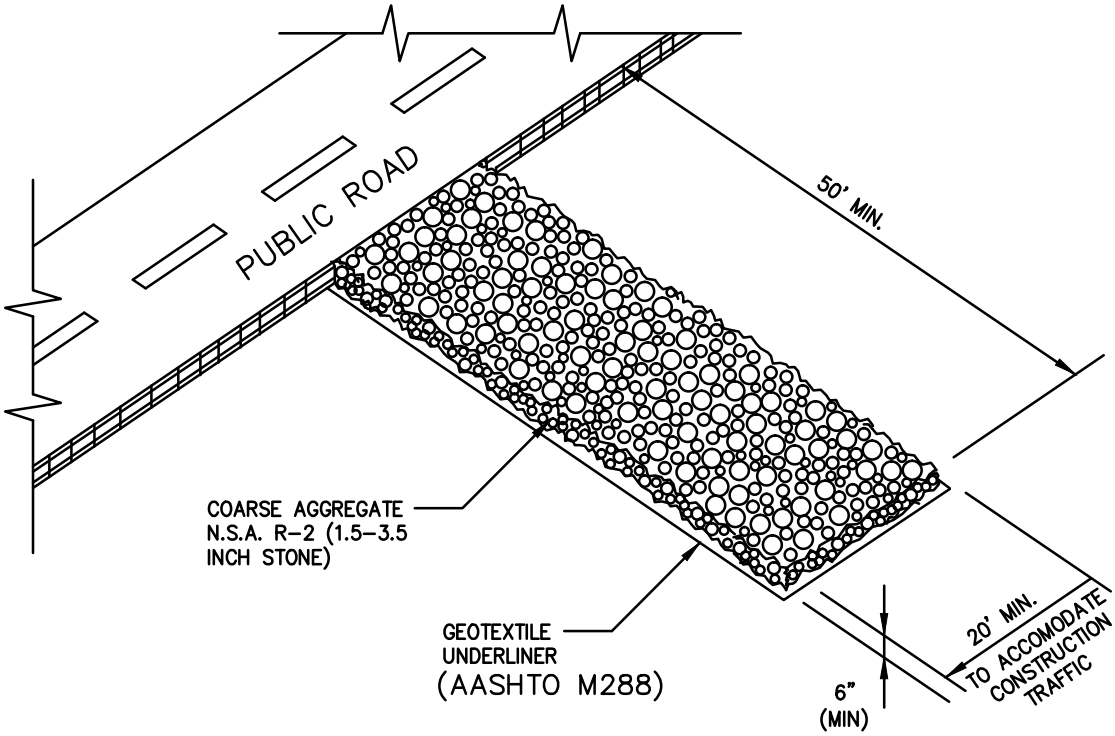

CO CONSTRUCTION EXIT
NTS

	TITLE		PW-65
	SURFACE ROUGHENING	Issue Date AUG, 2006	Revision Date MAR, 2013

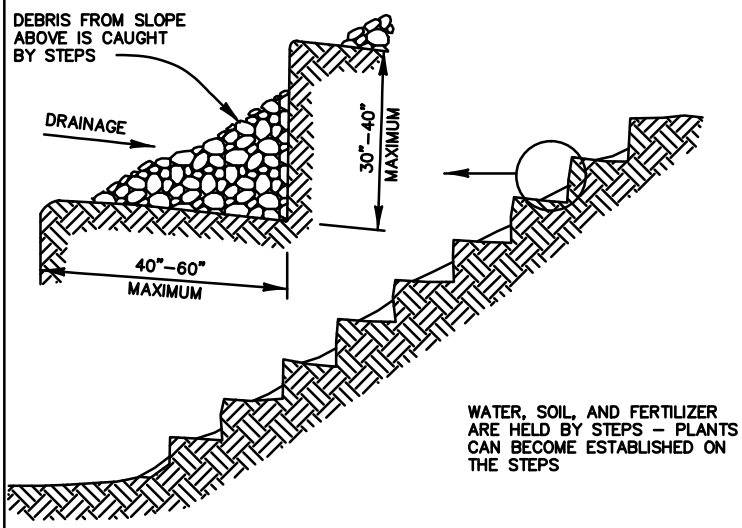

STAIR STEPPING CUT SLOPES

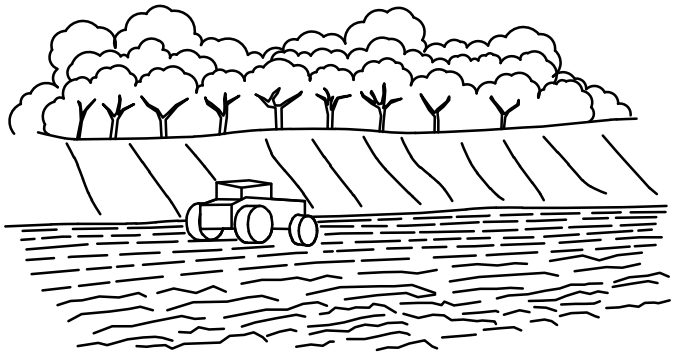

FILL SLOPE TREATMENT

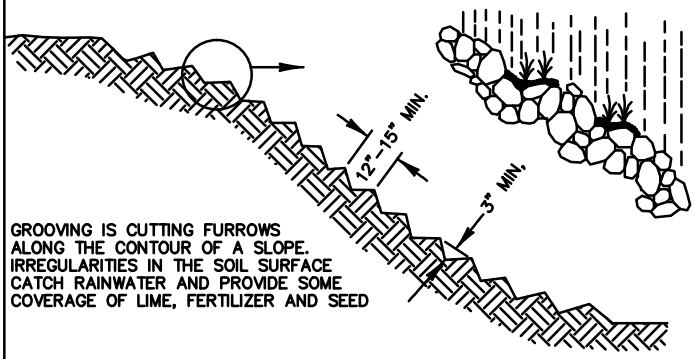

GROOVING SLOPES

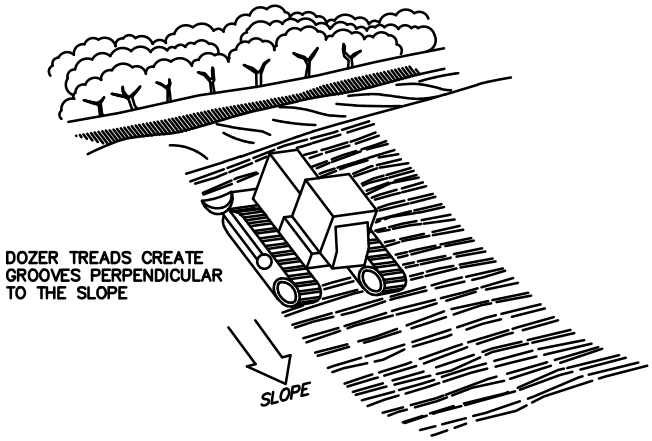

TRACKING

SU SURFACE ROUGHENING
NTS

	TITLE		
	TEMPORARY STABILIZATION TEMPORARY GRASSING PERMANENT GRASSING	Issue Date AUG, 2006	PW–66 Revision Date MAR, 2013

Ts1

TEMPORARY STABILIZATION

SPECIES	RATE / 1000 SF.	PLANTING DATES
STRAW MULCH	92 LB.	ANY TIME FOR TEMPORARY COVER.

Ts2

TEMPORARY GRASSING

SPECIES	RATE / ACRE	PLANTING DATES	FERTILIZER	RATE / ACRE	MULCH RATE
MILLET	50 LB	JAN 21 TO AUG 14	10–20–10	500 LB	REFER TO TS–1
RYE	100 LB	AUG 15 TO JAN 20	10–20–10	500 LB	

Ts3

PERMANENT GRASSING

SPECIES	RATE / ACRE	PLANTING DATES	FERTILIZER	RATE / ACRE	MULCH RATE
BERMUDA GRASS (UNHULLED) BERMUDA GRASS (HULLLED) LESPEDEZA (KOBE)	5 LB. 10 LB. 10 LB.	MARCH 1 TO JUNE 15	10–20–10	800 LB.	REFER TO TS–1
BERMUDA GRASS (UNHULLED) BERMUDA GRASS (HULLLED)	5 LB. 10 LB.	JUNE 16 TO AUGUST 31	10–20–10	800 LB.	
BERMUDA GRASS (UNHULLED) WHEAT	20 LB. 15 LB.	SEPTEMBER 1 TO FEBRUARY 29	10–20–10	800 LB.	

	TITLE		PW–67
	DIVERSION BERM	Issue Date AUG, 2006	Revision Date MAR, 2013

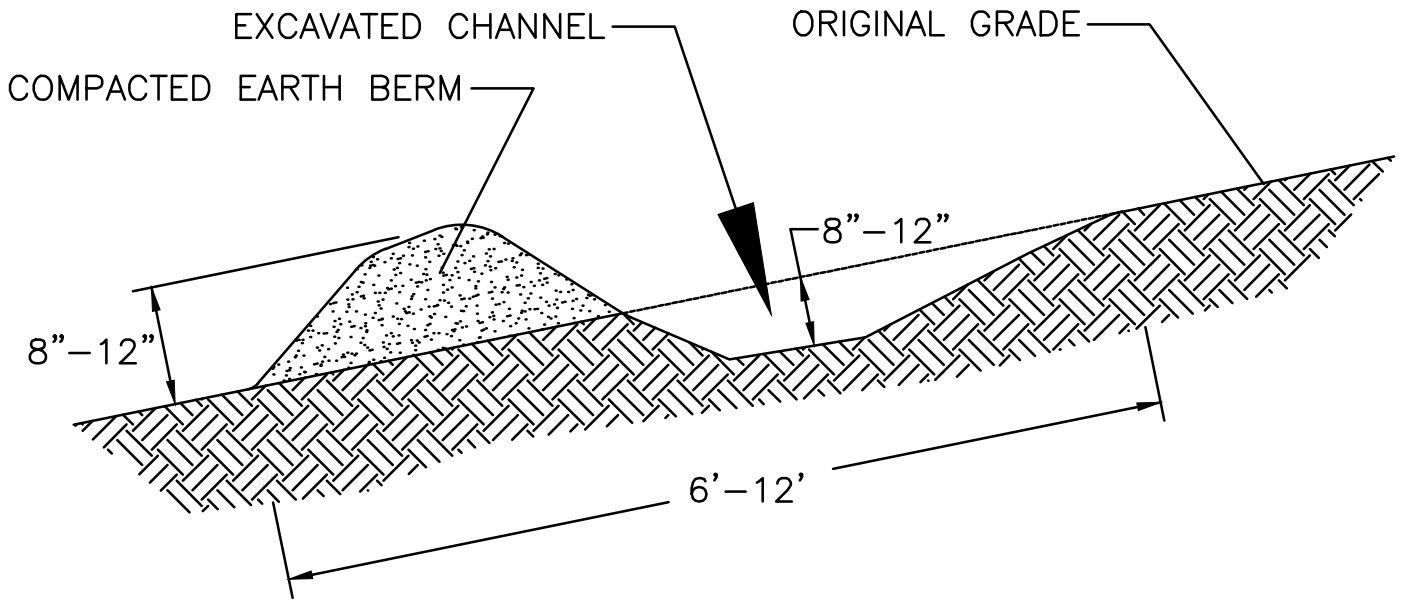

DI DIVERSION BERM
NTS

	TITLE		PW-68
	CHECK DAM	Issue Date AUG, 2006	Revision Date MAR, 2013

L = The distance such that points
A and B are of equal elevation (100' MAX)

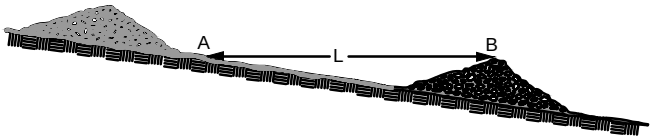

SPACING BETWEEN CHECK DAMS

STONE CHECK DAM

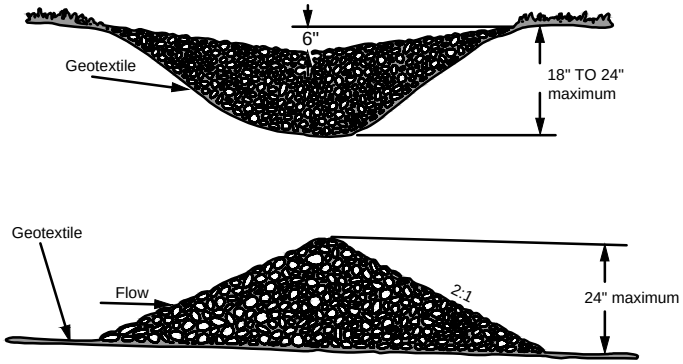

NOTES:

1. PLACE IN SMALL, OPEN CHANNELS, NOT IN LIVE STREAMS.
2. CONSTRUCT CENTER AT LEAST 6 INCHES LOWER THAN OUTER EDGES.
3. EXTEND ACROSS ENTIRE WIDTH OF DITCH OR SWALE.
4. MAKE SIDE SLOPES 2:1 OR FLATTER.
5. DRAINAGE AREA NOT TO EXCEED 2 ACRES.
6. CONSTRUCTED OF GRADED SIZE 2 IN–10 IN STONE.
7. PERIODIC INSPECTION AND MAINTENANCE REQUIRED.
8. REMOVE SEDIMENT WHEN IT REACHES A DEPTH OF ONE–HALF THE ORIGINAL DAM HEIGHT.
9. SAND BAGS MAY BE USED AS AN ALERNATE. GEOTEXTILE MAY BE OMITTED WHEN USING SAND BAGS

CD CHECK DAM
NTS

	TITLE		PW–69
	TEMPORARY DOWN DRAIN	Issue Date AUG, 2006	Revision Date MAR, 2013

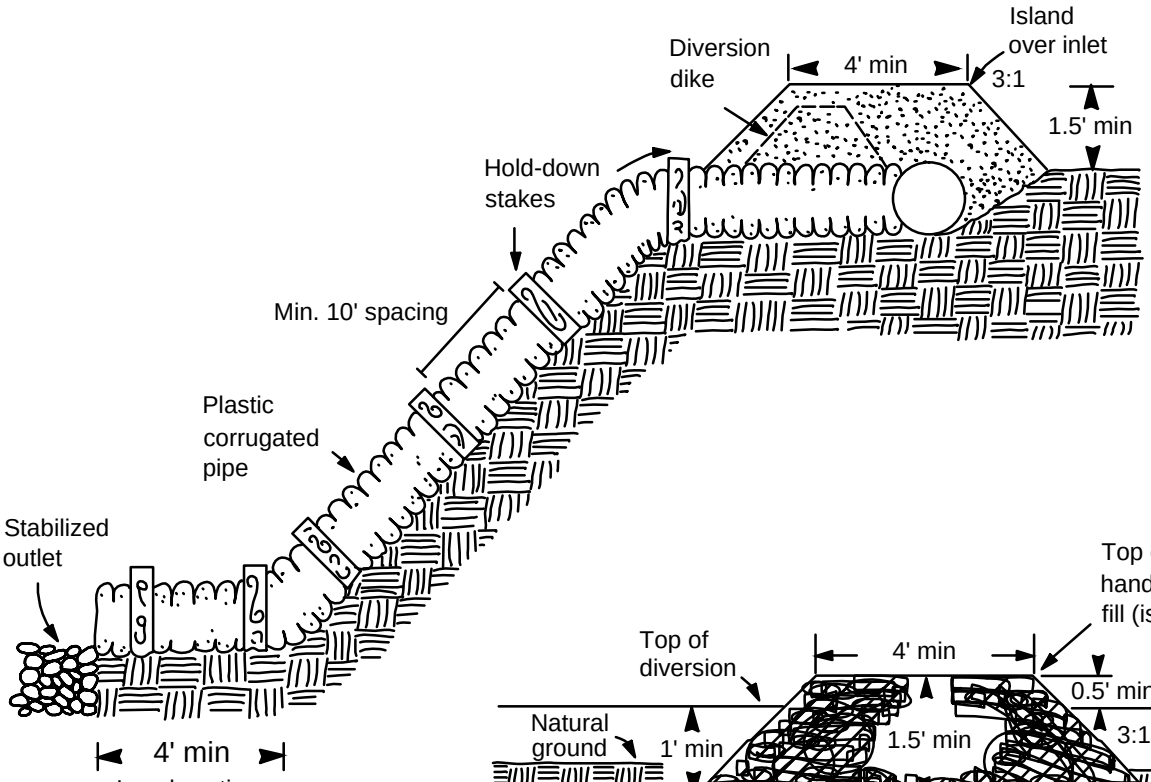

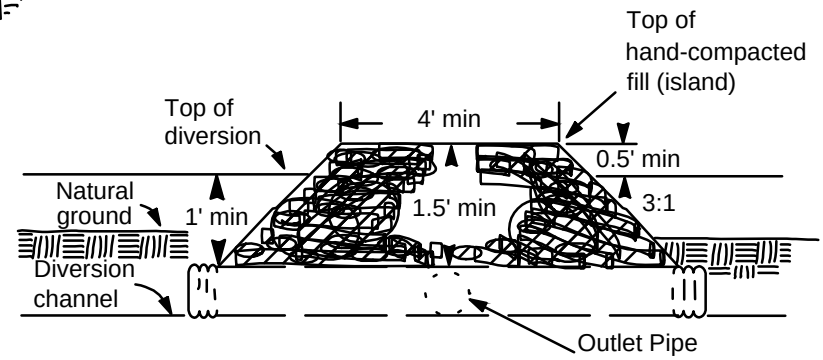

Inlet Detail

NOTES:
1. PLACE ON UNDISTURBED SOIL OR WELL–COMPACTED FILL.
2. INSTALL TEE, "L" OR FLARED END SECTION INLET AT THE TOP OF THE SLOPE.
3. ENTRANCE SLOPED 1/2" PER FOOT TOWARD INLET.
4. COMPACT A DIKE RIDGE NO LESS THAN ONE FOOT ABOVE THE TOP OF THE PIPE.
5. ANCHOR WITH HOLD–DOWN GROMMETS OR STAKES AT INTERVALS NOT TO EXCEED 10 FEET.
6. ENSURE CONNECTIONS ARE WATERTIGHT.
7. EXTEND PIPE BEYOND THE TOE OF THE SLOPE.
8. DIRECT OUTLET UPHILL.
9. STABILIZE OUTLET WITH TEE, RIPRAP OR OTHER SUITABLE MATERIAL.

MAXIMUM DRAINAGE AREA PER PIPE (ACRES)	PIPE DIAMETER (INCHES)
0.3	10
0.5	12
1.0	18

DN DOWN DRAIN
NTS

	TITLE ROCK DAM		PW–70
		Issue Date AUG, 2006	Revision Date MAR, 2013

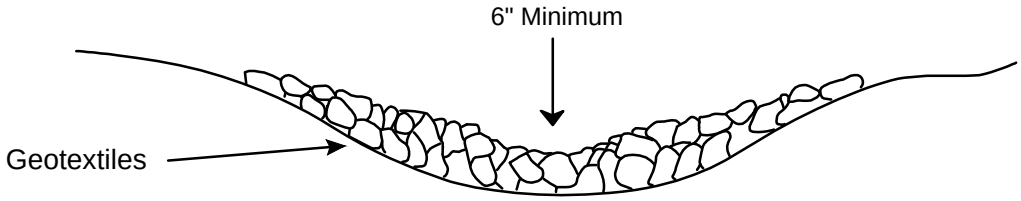

NOTE: Sediment Trap is to be cleaned out when volume becomes half full.

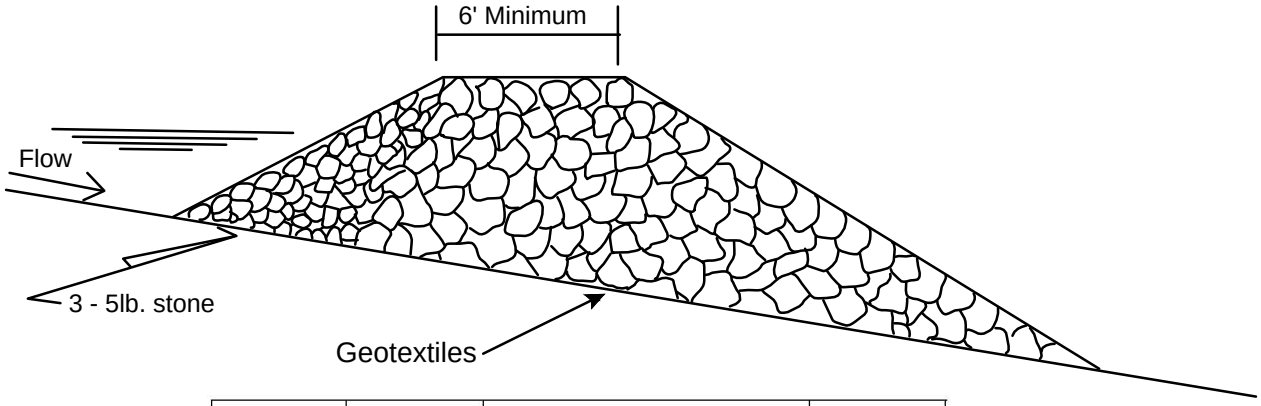

Flow Velocity (ft./sec.)	N.S.A. No.[1]	Size Inches (Sq. Opening) Max.	Avg.[2]	Min.	Filter Stone N.S.A. No.[1]
2.5	R-1	1 1/2	3/4	No. 8	FS-1
4.5	R-2	3	1 1/2	1	FS-1
6.5	R-3	6	3	2	FS-2
9.0	R-4	12	6	3	FS-2
11.5	R-5	18	9	5	FS-2
13.0	R-6	24	12	7	FS-3
14.5	R-7	30	15	12	FS-3

[1] National Stone Association

[2] At least 50% of the individual stone particles must be equal or larger than this listed size

NOTES:
1. FOR USE IN SMALL CHANNELS WITH DRAINAGE AREAS OF 50 ACRES OR LESS.
2. MUST BE USED IN CONJUNCTION WITH OTHER APPROPRIATE SEDIMENT CONTROL MEASURES.
3. USE BELOW CULVERT INSTALLATIONS, DAM CONSTRUCTION, OR ANY PROJECT THAT MAY INVOLVE GRADING ACTIVITY DIRECTLY IN A STREAM.
4. NOT INTENDED TO SUBSTANTIALLY IMPOUND WATER.
5. USE AT THE UPSTREAM END OF PONDS OR LAKES.
6. EDGES SHOULD NOT BE HIGHER THAN THE CHANNEL BANKS.
7. CENTER SHOULD BE AT LEAST 6 INCHES LOWER THAN THE OUTER EDGES OF THE DAM AT THE CHANNEL BANKS.
8. HEIGHT SHOULD NOT EXCEED ELEVATION OF UPSTREAM PROPERTY LINE.
9. SIDE SLOPES SHOULD BE 2:1 OR FLATTER.
10. TOP WIDTH SHOULD BE GREATER THAN 6 FEET.
11. EXTEND COMPLETELY ACROSS THE CHANNEL AND SECURELY TIE INTO BOTH CHANNEL BANKS
12. REQUIRES PERIODIC INSPECTION AND MAINTENANCE.
13. SEDIMENT REMOVED WHEN IT REACHES ONE–HALF OF THE ORIGINAL DAM HEIGHT

RD ROCK DAM
NTS

	TITLE		PW–71
	INLET PROTECTION	Issue Date AUG, 2006	Revision Date MAR, 2013

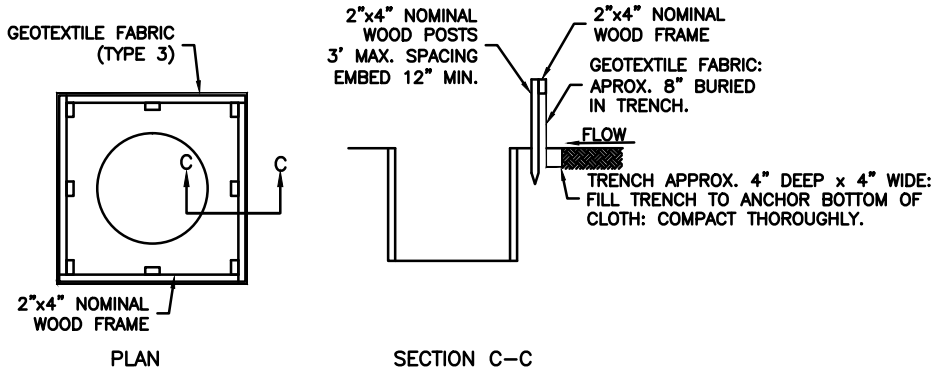

SD–1 SILT FENCE
NTS

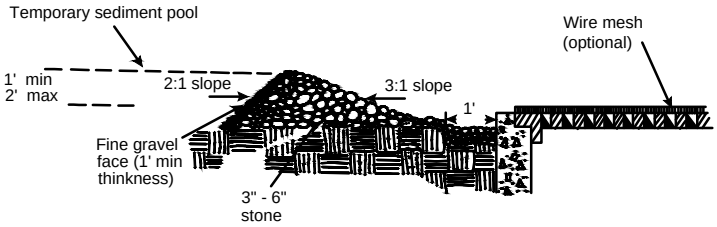

SD–2 GRATE INLET – GRAVEL RING
NTS

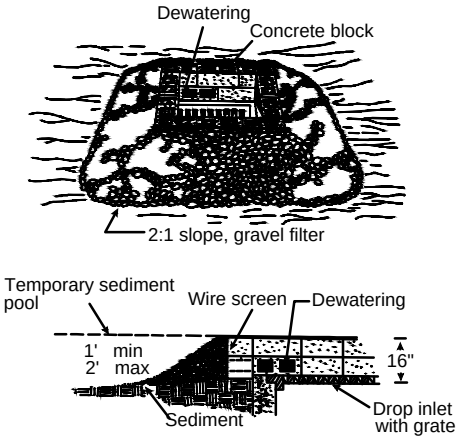

SD–3 GRATE INLET – BLOCK & GRAVEL
NTS

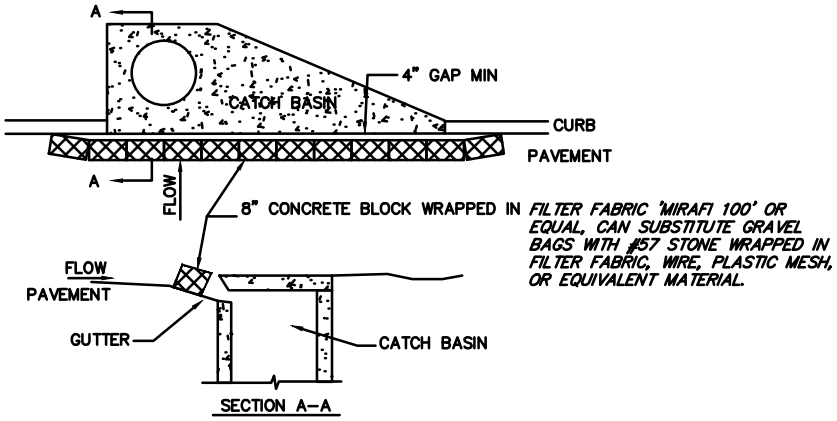

NOTE: INSTALL FILTER AFTER ANY ASPHALT PAVING

SD–4 CURB INLET – BLOCK
NTS

	TITLE		PW-72
	SEDIMENT BASIN	Issue Date AUG, 2006	Revision Date MAR, 2013

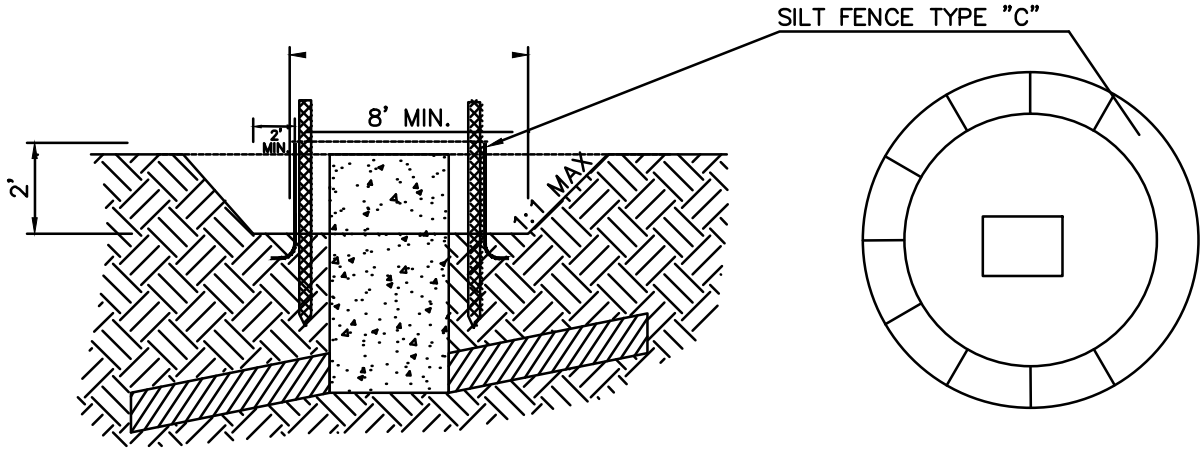

PROTECT INLETS DURING CONSTRUCTION. KEEP SEDIMENT OUT OF STORM DRAINAGE SYSTEM. USE HALF CIRCLE BEHIND CURB INLETS DURING STREET CONSTRUCTION. CIRCULAR SHAPE IS NOT ESSENTIAL – VARY SHAPE TO FIT DRAINAGE AREA AND TERRAIN. OBSERVE TO CHECK TRAP EFFICIENCY AND MODIFY AS NECESSARY TO TRAP SEDIMENT.

CLEAN WHEN SEDIMENT IS 6" BELOW RIM ELEVATION.

SB-2 INLET SEDIMENT TRAP

NTS

NOTES:

THE SEDIMENT STORAGE VOLUME OF THE BASIN, AS MEASURED TO THE ELEVATION OF THE CREST OF THE SPILLWAY, SHALL BE AT LEAST 67 CUBIC YARDS PER ACRE FOR THE DISTURBED AREA DRAINING INTO THE BASIN (67 CUBIC YARDS IS EQUIVALENT TO 1/2 INCH OF SEDIMENT PER ACRE OF DRAINAGE AREA). THE ENTIRE DRAINAGE BASIN AREA SHOULD BE USED FOR THIS COMPUTATION, RATHER THAN THE DISTURBED AREA ALONE, TO HELP ENSURE ADEQUATE TRAPPING EFFICIENCY. SEDIMENT SHALL BE REMOVED FROM THE BASIN WHEN APPROXIMATELY ONE-THIRD OF THE STORAGE VOLUME HAS BEEN LOST TO SEDIMENT ACCUMULATION. THIS VOLUME SHALL BE MARKED ON THE RISER OR BY SETTING A MARKED POST NEAR THE RISER.

	TITLE		PW–72
	SEDIMENT BASIN	Issue Date AUG, 2006	Revision Date MAR, 2013

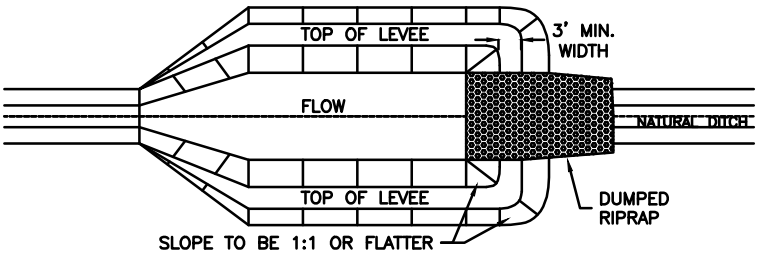

PLAN

NOTE:
SIZE OF BASIN TO BE DETERMINED BY VOLUME REQUIRED, HOWEVER, A MINIMUM LENGTH–TO–WIDTH RATIO OF 2:1 SHALL BE MAINTAINED.

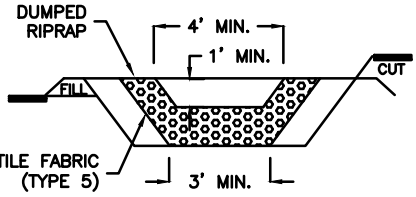

SECTION A–A

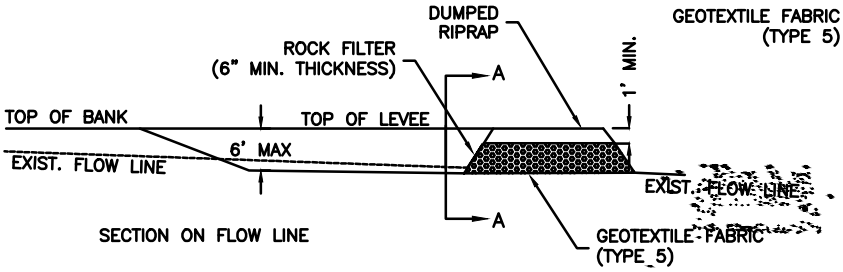

SECTION ON FLOW LINE

SEDIMENT BASIN WITH RIPRAP OUTLET

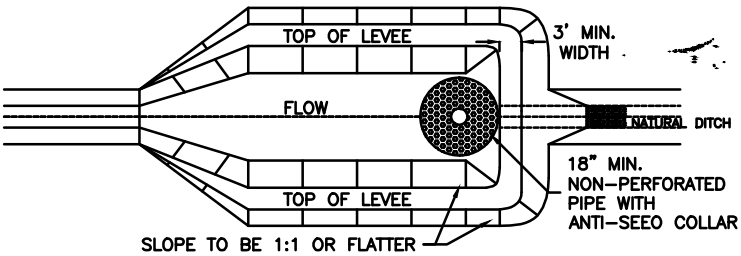

PLAN

NOTE:
SIZE OF BASIN TO BE DETERMINED BY VOLUME REQUIRED, HOWEVER, A MINIMUM LENGTH–TO–WIDTH RATIO OF 2:1 SHALL BE MAINTAINED.

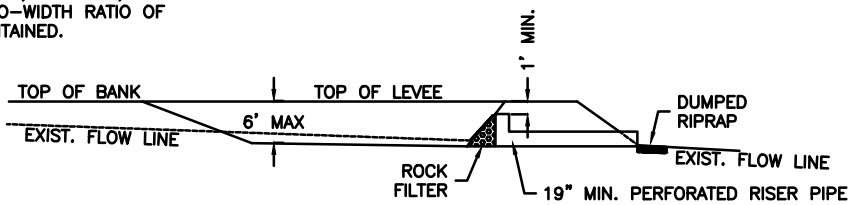

SECTION ON FLOW LINE

SEDIMENT BASIN WITH PIPE OUTLET

SB–1 TEMPORARY SEDIMENT BASIN

NTS

	TITLE TREE PROTECTION		PW–73
		Issue Date AUG, 2006	Revision Date MAR, 2013

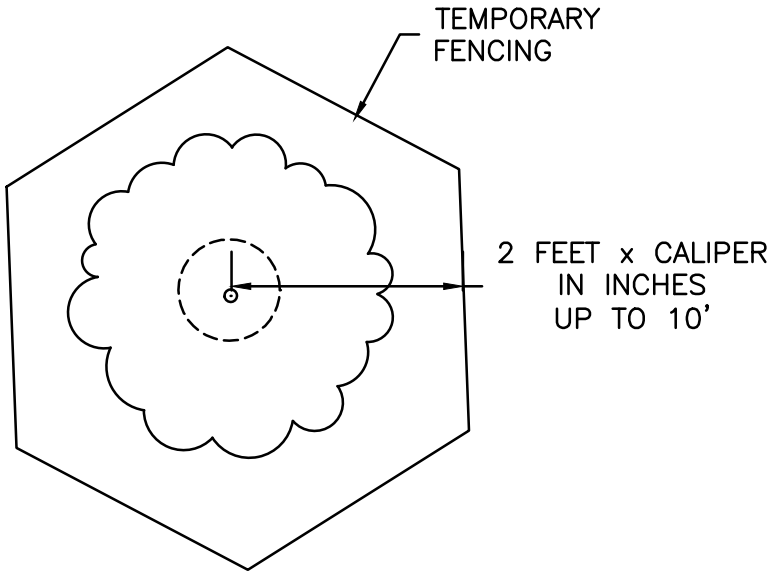

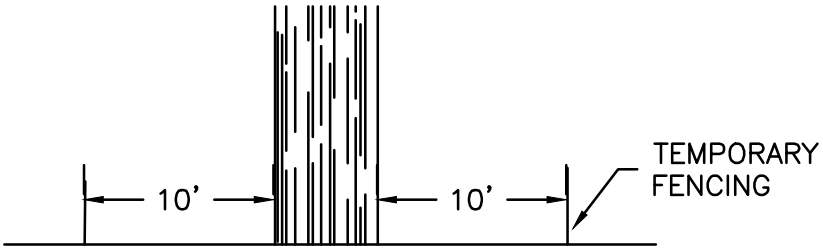

NO FILL WITHIN
10' OF TRUNK OF
TREE

NOTE: TEMPORARY FENCING SHALL BE PLACED PRIOR TO CONSTRUCTION IN AREA.

	TITLE		PW–74
	FRAME BARRICADE TYPE 3 PERMANENT INSTALLATION	Issue Date AUG, 2006	Revision Date MAR, 2013

NOTE:

FASTEN TREATED LUMBER WITH $\frac{3}{8}$"x6" LAG SCREWS, WITH WASHERS 2 EACH SIDES
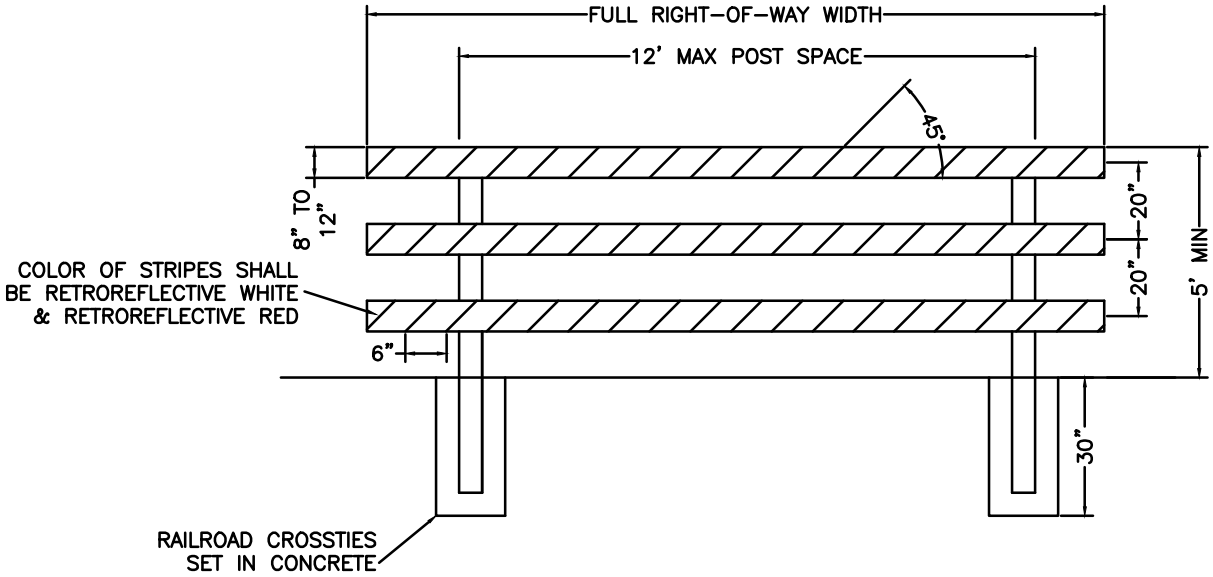
BARRICADE SHALL CONFORM TO THE MANUAL ON UNIFORM TRAFFIC CONTROL DEVICES. SECTION 3F.01