CLR PROJECT 03-17-DR-235
BRIARWOOD AREA
DRAINAGE IMPROVEMENTS
SUN VALLEY ROAD TO MARKHAM STREET - PHASE 1

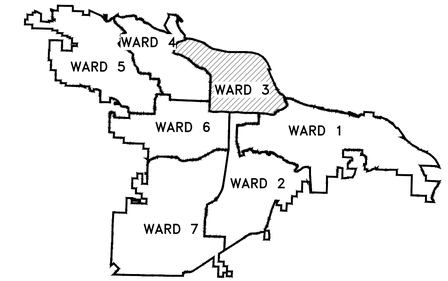

PROJECT LOCATION – WARD 3

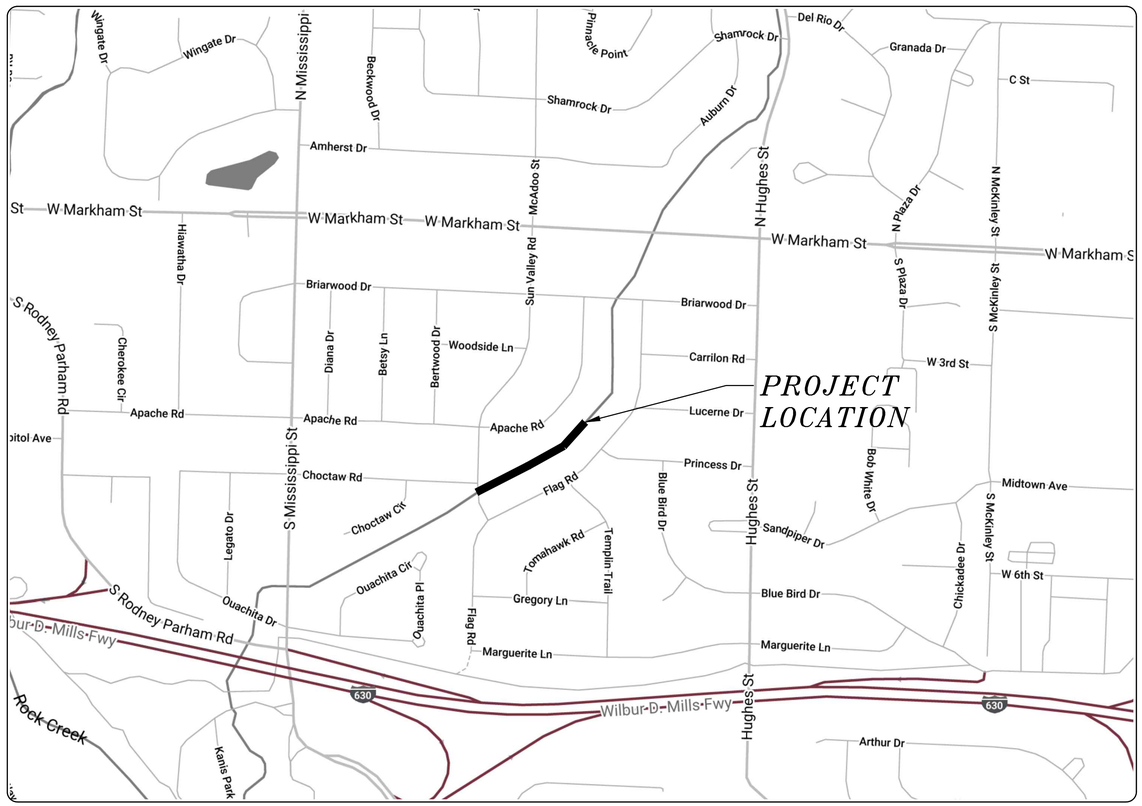

SHEET NO.	TITLE
C1	COVER SHEET
C2	QUANTITIES & DETAILS
C3-C6	SPECIAL DETAILS
C7	FIELD TIES/LAYOUT
C8	BRIARWOOD DITCH 1
C9	BRIARWOOD DITCH 2
C10	EROSION CONTROL
C11-C14	CROSS SECTIONS

PUBLIC WORKS · CITY OF LITTLE ROCK ·

GARVER LLC No. 766 CERTIFICATE OF AUTHORIZATION ARKANSAS ENGINEER

Know what's below. Call before you dig.

2019-2021
BOND PROGRAM

DEPARTMENT OF PUBLIC WORKS
CIVIL ENGINEERING
701 WEST MARKHAM STREET
LITTLE ROCK, ARKANSAS 72201

GARVER
4701 Northshore Drive
North Little Rock, AR 72118
501-376-3633

REVISIONS	DATE

CITY OF LITTLE ROCK, ARKANSAS
BRIARWOOD AREA DRAINAGE IMPROVEMENTS
COVER SHEET

DEPARTMENT OF PUBLIC WORKS
CIVIL ENGINEERING
701 W. MARKHAM
LITTLE ROCK, ARKANSAS 72201

STATE OF ARKANSAS LICENSED PROFESSIONAL ENGINEER No.18314 RICHARD C. CORBYN
Digitally Signed 12/30/2021

DRAWN BY	MJM
DESIGNED	RCC
CHECKED	TEM
DATE	12-30-2021
SCALE	N.T.S.
PROJECT NO.	03-17-DR-235
SHEET NO.	C1

	CLR PROJECT# 03-17-DR-235		
	BRIARWOOD AREA DRAINAGE IMPROVEMENTS - **BASE BID**		
	December 30, 2021		
ITEM #	**ITEM DESCRIPTION**	**UNIT**	**QUANTITY**
2.01	SITE PREPARATION	LS	1
3.01	UNCLASSIFIED EXCAVATION	CY	1,681
3.06	BORROW MATERIAL	CY	1,119
3.40	TOPSOIL	CY	196
10.10	WING 6' EXTENSION	EA	3
10.14	WING 10' EXTENSION	EA	2
10.80	REBUILD INLET TOP	EA	3
11.10	REINFORCED CONCRETE	CY	544
11.11	CONCRETE PIPE COLLAR	EA	1
11.12	CONCRETE DITCH PAVING	SY	7
13.30C	STORM DRAIN PIPE, 30" SIDE DRAIN	LF	26
13.36C	STORM DRAIN PIPE, 36" SIDE DRAIN	LF	8
13.48C	STORM DRAIN PIPE, 48" SIDE DRAIN	LF	8
13.63	CONCRETE PLUG ON EXISTING STORM DRAIN	EA	2
14.01	SOLID SODDING, BERMUDA	SY	1,761
16.01	MAINTENANCE OF TRAFFIC	LS	1
19.01	FINAL CLEANUP	LS	1
23.02	C-BALLAST	TON	1,029
23.04	STONE BACKFILL	TON	294
24.02	CHECK DAM (CD)	CY	5
24.06	SEDIMENT BARRIER, SILT FENCE (SD1)	EA	3
24.09	SEDIMENT BARRIER, BLOCK (SD4)	EA	3
25.04	FENCE CHAIN LINK (4')	LF	1,404
25.14	FENCE WOOD (4')	LF	71
25.16	FENCE WOOD (6')	LF	266
25.74	TEMPORARY FENCING	LF	1,039
26.10	TRENCH & EXCAVATION SAFETY	LS	1
206.01	FLOWABLE FILL	CY	6
606.36C	FLARED END SECTION 36" RCP	EA	1

	CLR PROJECT# 03-17-DR-235		
	BRIARWOOD AREA DRAINAGE IMPROVEMENTS - **DEDUCTIVE ALTERNATE # 1**		
	December 30, 2021		
ITEM #	**ITEM DESCRIPTION**	**UNIT**	**QUANTITY**
2.01	SITE PREPARATION	LS	1
3.01	UNCLASSIFIED EXCAVATION	CY	246
3.06	BORROW MATERIAL	CY	167
3.40	TOPSOIL	CY	17
11.10	REINFORCED CONCRETE	CY	75
14.01	SOLID SODDING, BERMUDA	SY	156
23.02	C-BALLAST	TON	129
23.04	STONE BACKFILL	TON	2
25.04	FENCE CHAIN LINK (4')	LF	158
25.16	FENCE WOOD (6')	LF	54
25.74	TEMPORARY FENCING	LF	133
26.10	TRENCH & EXCAVATION SAFETY	LS	1
206.01	FLOWABLE FILL	CY	6

EXISTING

- IRON ROD — IR
- PK NAIL — PK
- R.R. SPIKE — RR(Sp)
- CONC. MONUMENT — CM
- WATER VALVE — WV
- WATER METER — WM
- FIRE HYDRANT — FH
- GAS METER — GM
- GAS VALVE — GV
- CLEAN-OUT — CO
- GUARD POST (BOLLARD) — GP
- SIGN POST
- BENCHMARK
- STORM SEWER MANHOLE — D
- SANITARY SEWER MANHOLE — S
- TELEPHONE MANHOLE — T
- ELECTRIC MANHOLE — E
- TELEPHONE BOX — T
- ELECTRIC BOX — E
- CABLE BOX — C
- UTILITY POLE
- GUY WIRE
- LIGHT POLE
- POST OR POLE (TYPE AS NOTED)
- MAILBOX
- DECIDUOUS TREE
- EVERGREEN/CONIFEROUS TREE
- BUSH
- PROPERTY LINE
- SETBACK LINE
- EASEMENT LINE
- CURB
- FENCE — X — X
- OVERHEAD UTILITY — OHP — OHP
- UNDERGROUND TELEPHONE — UGT — UGT — UGT
- UNDERGROUND ELECTRIC — UGE — UGE — UGE
- WATER LINE — 8"W — 8"W — 8"W
- SEWER LINE — 8S — 8S — 8S
- GAS LINE — GAS — GAS — GAS
- STORM SEWER/CULVERT — 24" CMP/RCP/DIP
- CONTOUR LINE — 650

PROPOSED

- CONTOUR — 25
- SPOT ELEVATION — 25.00
- SPOT CURB ELEVATION — 25.50 / 25.00
- STORM SEWER – PIPE
- STORM SEWER – MITERED END SECTION
- STORM SEWER – GRATE INLET
- STORM SEWER – JUNCTION BOX — D D
- STORM SEWER – FLARED END SECTION
- STORM SEWER – HEADWALL
- STORM SEWER – INLET WITH SINGLE EXTENSION — D
- STORM SEWER – INLET WITH DOUBLE EXTENSION — D
- STORM SEWER – AREA INLET — D
- GRADE BREAK LINE
- HIGH POINT — HP
- LOW POINT — LP
- CUT LINE — C
- FILL LINE — F
- SANITARY SEWER PIPE — SAN
- SANITARY SEWER MANHOLE — S
- CURB
- CONCRETE
- CONSTRUCTION – ENTRANCE/EXIT — CO
- CHECK DAM — CD
- DIVERSION BERM — DI
- DOWNDRAIN STRUCTURE – TEMPORARY — DN
- ROCK DAM — RD
- SEDIMENT BARRIER – SILT FENCE — SD1
- SEDIMENT BARRIER – GRAVEL RING — SD2
- SEDIMENT BARRIER – BLOCK & GRAVEL — SD3
- SEDIMENT BARRIER – BLOCK — SD4
- TEMPORARY SEDIMENT BASIN — SB1
- SILT FENCE – TYPE A — SFA
- SILT FENCE – TYPE B — SFB
- SILT FENCE – TYPE C — SFC
- STORM DRAIN OUTLET PROTECTION — ST
- SURFACE ROUGHENING — SU
- DISTURBED AREA STABILIZATION –TEMPORARY STABILIZATION — TS1
- DISTURBED AREA STABILIZATION –TEMPORARY GRASSING — TS2
- DISTURBED AREA STABILIZATION –PERMANENT GRASSING — TS3
- MATTING/BLANKETS — Mb
- WOOD FENCE
- CHAIN LINK FENCE

GENERAL NOTES:

1. ALL EXISTING STRUCTURES OR UTILITIES WITHIN THE LIMITS OF EXISTING OR PROPOSED EASEMENTS SHALL REMAIN UNDISTURBED UNLESS OTHERWISE NOTED ON THE PLANS.

2. WHERE EXCAVATION ENDANGERS THE STABILITY OF A BUILDING, WALL, STREET, UTILITIES OR OTHER INSTALLATION, THE CONTRACTOR SHALL PROVIDE SUPPORT SYSTEMS SUCH AS SHORING, BRACING, OR UNDERPINNING TO ENSURE STABILITY OF SUCH STRUCTURE OR UTILITY. PRIOR TO CONSTRUCTION OF THE SHORING SYSTEM, THE CONTRACTOR SHALL SUBMIT THE DESIGN AND DETAILS OF THE THE SYSTEM TO THE ENGINEER FOR INFORMATIONAL AND RECORD PURPOSES. THE DESIGN AND DETAILS SHALL BE PREPARED AND/OR APPROVED BY A PROFESSIONAL ENGINEER REGISTERED IN ARKANSAS. THE CONTRACTOR SHALL BE RESPONSIBLE FOR THE ADEQUACY OF THE TEMPORARY SHORING DURING THE ENTIRE PERIOD OF CONSTRUCTION.

3. WHEN THE CONTRACTOR'S OPERATIONS CREATE THE NEED FOR TEMPORARY FENCING, PROVIDE AND INSTALL TEMPORARY FENCING AND APPURTENANCES UNTIL SUCH TIME THAT THE PERMANENT FENCE IS IN PLACE (OR UNTIL THE TEMPORARY FENCE IS NO LONGER REQUIRED). AT THE DISCRETION OF THE ENGINEER, TEMPORARY FENCING MAY BE ERECTED WITHOUT CONCRETE FOOTINGS, PULL POSTS, CORNER POSTS, ETC. REMOVE THE TEMPORARY FENCING AND APPURTENANCES FROM THE PROJECT SITE, WHEN DIRECTED BY THE ENGINEER. TEMPORARY FENCING MATERIALS WILL REMAIN THE PROPERTY OF THE CONTRACTOR.

REVISIONS	DATE

CITY OF LITTLE ROCK, ARKANSAS
BRIARWOOD AREA DRAINAGE IMPROVEMENTS

QUANTITIES & DETAILS

DEPARTMENT OF PUBLIC WORKS
CIVIL ENGINEERING
701 W. MARKHAM
LITTLE ROCK, ARKANSAS 72201

STATE OF ARKANSAS
LICENSED PROFESSIONAL ENGINEER
No.18314
RICHARD C. CORBYN
Digitally Signed 12/30/2021

DRAWN BY	MJM
DESIGNED	RCC
CHECKED	TEM
DATE	12-30-2021
SCALE	N.T.S.
PROJECT NO.	03-17-DR-235
SHEET NO.	C2

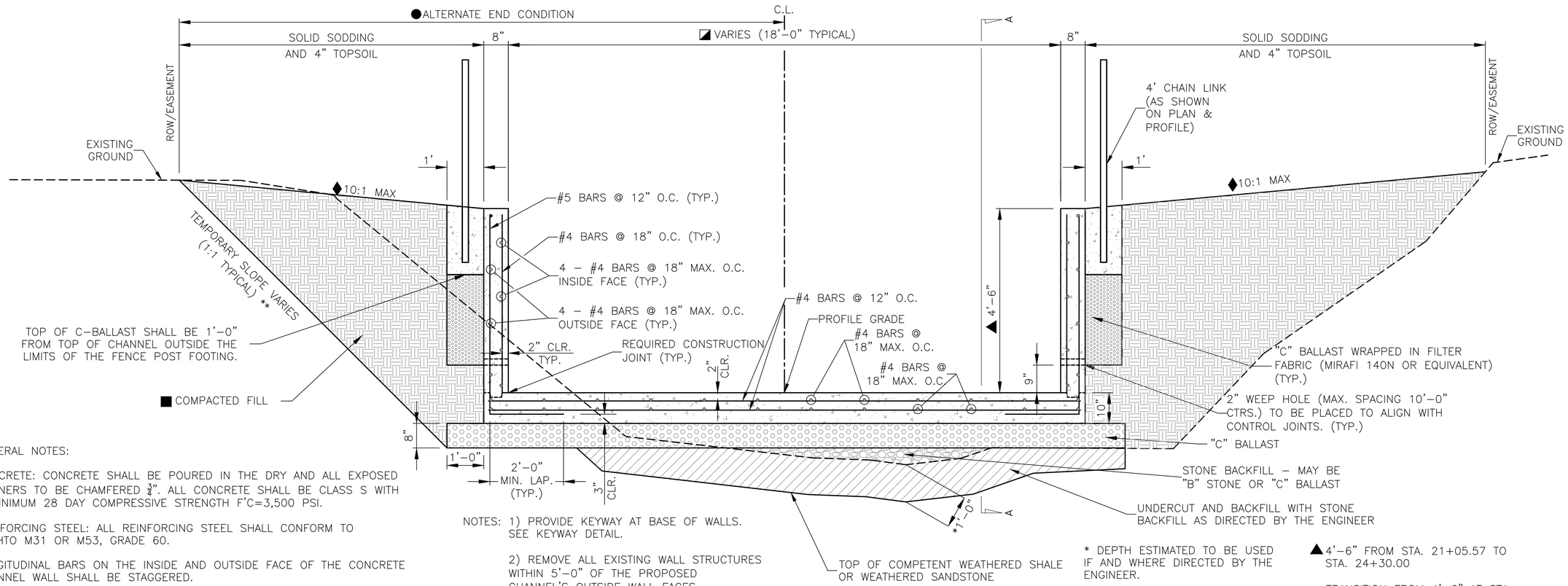

NOTES: 1) PROVIDE KEYWAY AT BASE OF WALLS. SEE KEYWAY DETAIL.

2) REMOVE ALL EXISTING WALL STRUCTURES WITHIN 5'-0" OF THE PROPOSED CHANNEL'S OUTSIDE WALL FACES.

REINFORCED CONCRETE CHANNEL TYPICAL SECTION

STA. 21+05.57 TO STA. 27+50.00

GENERAL NOTES:

CONCRETE: CONCRETE SHALL BE POURED IN THE DRY AND ALL EXPOSED CORNERS TO BE CHAMFERED ¾". ALL CONCRETE SHALL BE CLASS S WITH A MINIMUM 28 DAY COMPRESSIVE STRENGTH F'C=3,500 PSI.

REINFORCING STEEL: ALL REINFORCING STEEL SHALL CONFORM TO AASHTO M31 OR M53, GRADE 60.

LONGITUDINAL BARS ON THE INSIDE AND OUTSIDE FACE OF THE CONCRETE CHANNEL WALL SHALL BE STAGGERED.

LAP LENGTH FOR #4 BARS SHALL BE 1'-9" MINIMUM.

TOE WALL TO BE CONSTRUCTED FULL WIDTH AT THE INLET END OF THE CONCRETE CHANNEL AND TO BE POURED MONOLITHICALLY.

STONE BACKFILL MAY BE "B" STONE OR "C" BALLAST AND SHALL BE PAID FOR UNDER THE UNIT PRICE BID PER CUBIC YARD FOR "STONE BACKFILL".

EXCAVATION FOR UNDERCUT AREAS SHALL NOT BE PAID FOR SEPARATELY, BUT SHALL BE INCLUDED IN THE UNIT PRICE BID PER CUBIC YARD FOR "STONE BACKFILL".

REMOVAL OF TREES/SHRUBS SHALL NOT BE MEASURED FOR SEPARATE PAYMENT, BUT SHALL BE INLCUDED IN THE UNIT PRICE BID FOR "SITE PREPARATION."

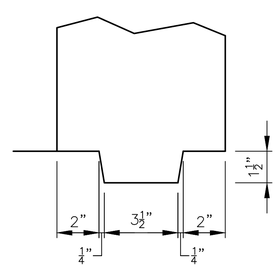

KEYWAY DETAIL

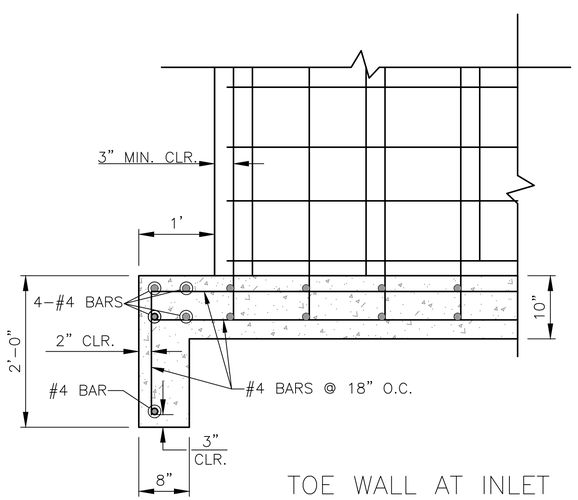

TOE WALL AT INLET OF CONCRETE CHANNEL
STA. 27+50
SECTION A–A

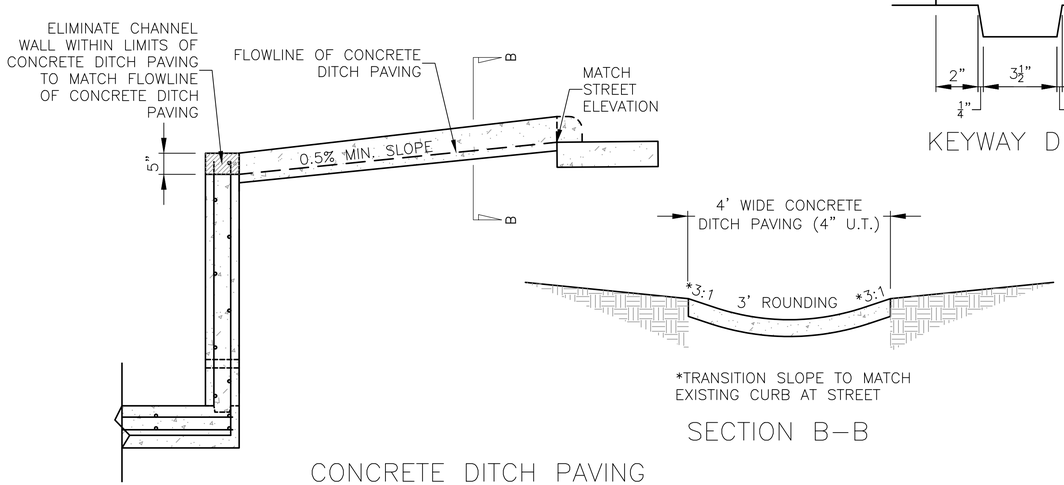

SECTION B–B

CONCRETE DITCH PAVING

* DEPTH ESTIMATED TO BE USED IF AND WHERE DIRECTED BY THE ENGINEER.

** SOIL TYPE SHALL BE DETERMINED IN THE FIELD AND THE APPROPRIATE OSHA SLOPING OR BENCHING METHOD SHALL BE SELECTED.

▲4'-6" FROM STA. 21+05.57 TO STA. 24+30.00

TRANSITION FROM 4'-6" AT STA. 24+30.00 TO TO 5'-0" AT STA. 24+50.00.

TRANSITION FROM 5'-0" AT STA. 25+70.00 TO TO 5'-6" AT STA. 25+90.00.

◪ TRANSITION FROM 23'-6.5" AT STA. 21+05.57 TO 18'-0" AT STA. 21+85.

TRANSITION FROM 18'-0" AT STA. 24+70 TO 16'-0" AT STA. 25+10.

TRANSITION LEFT OF CENTERLINE WIDTH FROM 8'-0" AT STA. 26+67.45 TO 11'-0" AT STA. 26+87.45.

TRANSITION RIGHT OF CENTERLINE WIDTH FROM 8'-0" AT STA. 27+30 TO 9'-1.5" AT STA. 27+50.

♦ 3:1 MAX SLOPE WHERE EXISTING STRUCTURES PREVENT FLATTER GRADES.

● SEE LEFT END CONDITION DETAIL FOR DETAILS OF THE ALTERNATE END CONDITION FROM STA. 26+87.45 TO STA. 27+50.

■ COMPACTED FILL MATERIAL SHALL HAVE A MAXIMUM PI = 18 AND A MAXIMUM PARTICLE SIZE OF 1.5". THIS MATERIAL SHALL BE COMPACTED TO 95% STANDARD PROCTOR DENSITY.

REVISIONS	DATE

CITY OF LITTLE ROCK, ARKANSAS
BRIARWOOD AREA DRAINAGE IMPROVEMENTS

SPECIAL DETAILS

DEPARTMENT OF PUBLIC WORKS
CIVIL ENGINEERING
701 W. MARKHAM
LITTLE ROCK, ARKANSAS 72201

STATE OF ARKANSAS
LICENSED PROFESSIONAL ENGINEER
No.18314
RICHARD C. COBBYN
Digitally Signed 12/30/2021

DRAWN BY	MJM
DESIGNED	RCC
CHECKED	TEM
DATE	12-30-2021
SCALE	N.T.S.
PROJECT NO.	03-17-DR-235
SHEET NO.	C3

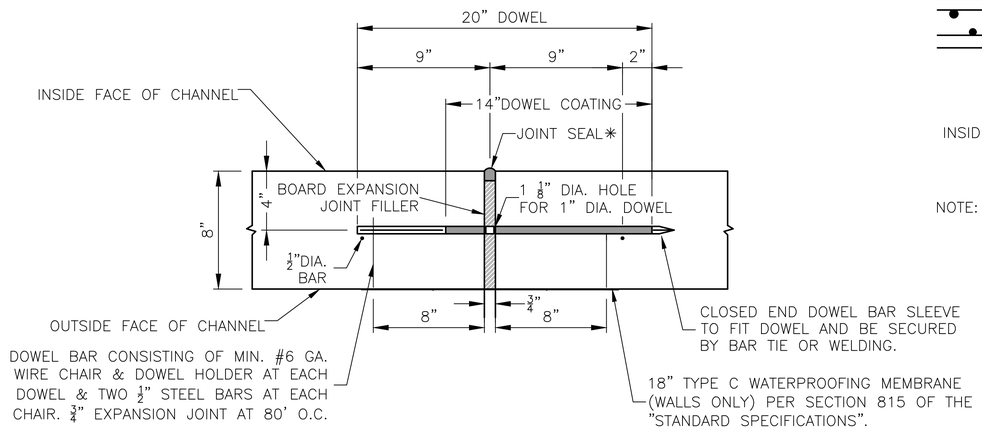

EXPANSION JOINT FOR CONCRETE CHANNEL
(DOWEL BARS TO BE 12" O.C.)

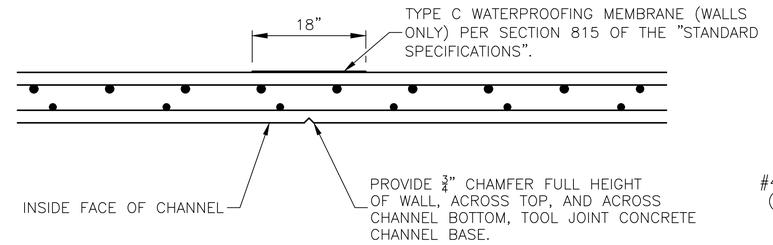

NOTE: 10'-0" MAX. SPACING BETWEEN CONTROL JOINTS. HORIZONTAL REINFORCEMENT SHALL BE CONTINUOUS THROUGH CONTROL JOINTS.

CONTROL JOINT FOR CONCRETE CHANNEL
(USED AT 10' O.C.)

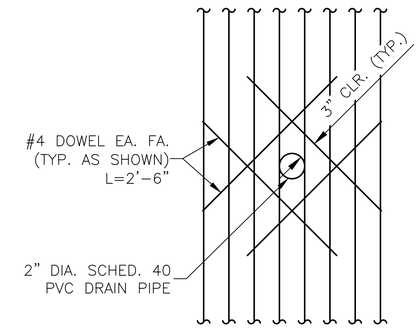

DRAIN PIPE REINFORCING DETAIL
FOR CONCRETE CHANNEL

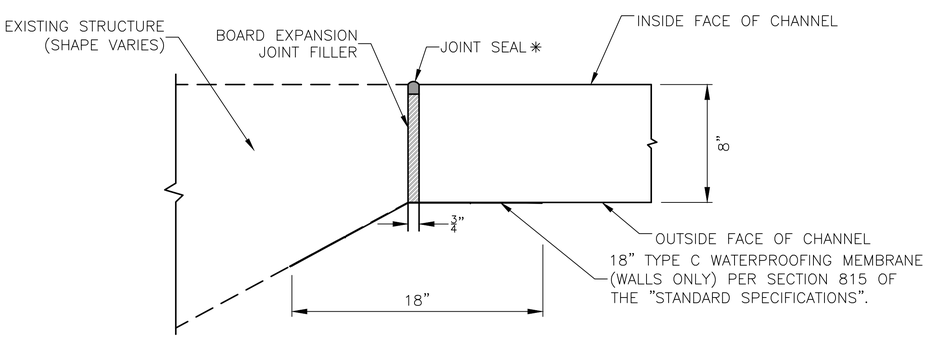

EXPANSION JOINT FOR CHANNEL
CONNECTION TO EXISTING STRUCTURES
STA. 20+98.66 RT, STA. 21+11.56 LT,
STA. 26+87.45 LT, AND STA. 27+50.00 RT

✳ JOINT SEAL SHALL BE APPLIED ALONG ALL EXPOSED BOARD EXPANSION JOINT FILLER, INCLUDING ALONG THE INSIDE FACE OF CHANNEL WALL AND THE TOP OF CHANNEL WALL.

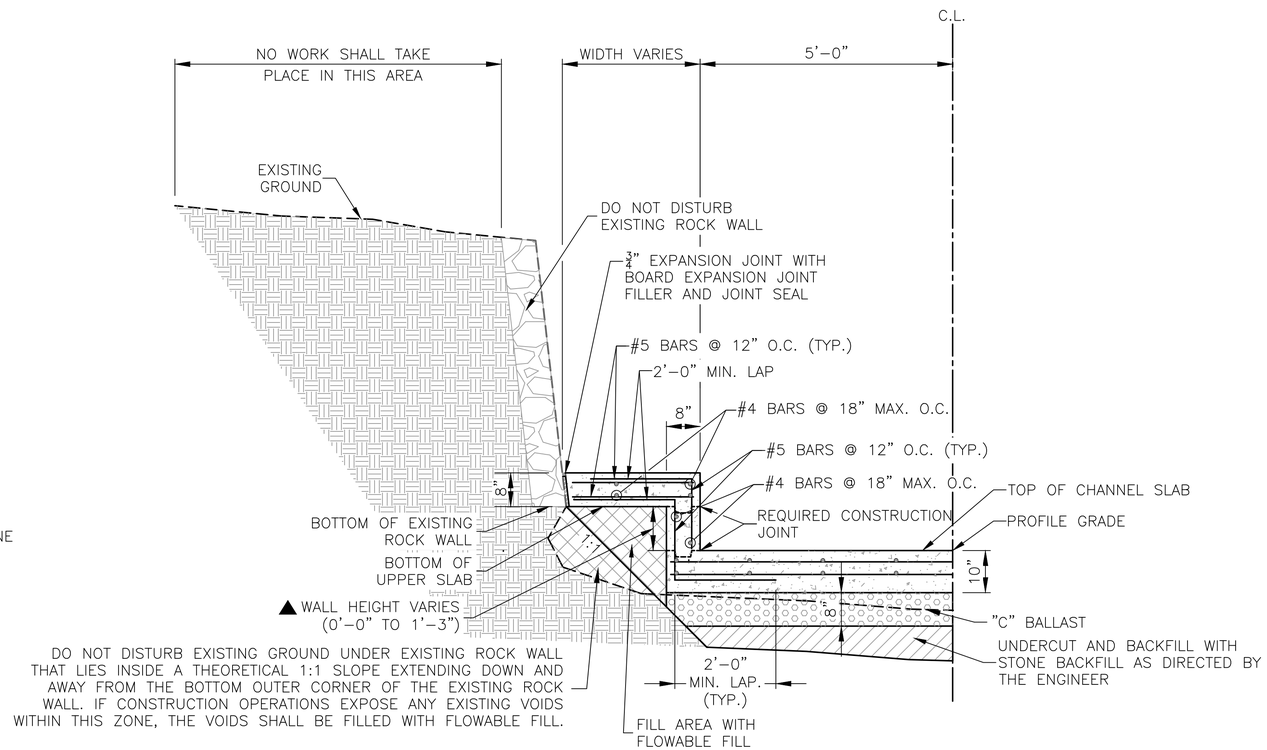

DO NOT DISTURB EXISTING GROUND UNDER EXISTING ROCK WALL THAT LIES INSIDE A THEORETICAL 1:1 SLOPE EXTENDING DOWN AND AWAY FROM THE BOTTOM OUTER CORNER OF THE EXISTING ROCK WALL. IF CONSTRUCTION OPERATIONS EXPOSE ANY EXISTING VOIDS WITHIN THIS ZONE, THE VOIDS SHALL BE FILLED WITH FLOWABLE FILL.

▲ VARY WALL HEIGHT SO THAT THE BOTTOM OF THE UPPER SLAB WILL BE AT THE SAME ELEVATION AS THE BOTTOM OF THE EXISTING ROCK WALL. WALL HEIGHT SHALL BE MINIMIZED TO EXTENT POSSIBLE WHILE MEETING THE REQUIREMENTS OF THIS DETAIL.

IF THE BOTTOM OF THE EXISTING ROCK WALL IS AT A LOWER ELEVATION THAN THE TOP OF THE CHANNEL SLAB, THEN THE WALL COMPONENT OF THIS DETAIL SHALL BE ELIMINATED AND THE UPPER SLAB SHALL BE PLACED DIRECTLY ON THE CHANNEL SLAB WITH ONE CONSTRUCTION JOINT.

NOTE: FLOWABLE FILL SHALL BE IN ACCORDNACE WITH SECTION 206 OF THE ARDOT STANDARD SPECIFICATIONS AND SHALL BE PAID FOR AT THE UNIT PRICE BID PER CUBIC YARD FOR "FLOWABLE FILL".

LEFT END CONDITION DETAIL
STA. 26+87.45 TO STA. 27+50.00

REVISIONS	DATE

CITY OF LITTLE ROCK, ARKANSAS
BRIARWOOD AREA DRAINAGE IMPROVEMENTS

SPECIAL DETAILS

DEPARTMENT OF PUBLIC WORKS
CIVIL ENGINEERING
701 W. MARKHAM
LITTLE ROCK, ARKANSAS 72201

STATE OF ARKANSAS
LICENSED PROFESSIONAL ENGINEER
No.18314
RICHARD C. CORBYN
Digitally Signed 12/30/2021

DRAWN BY	MJM
DESIGNED	RCC
CHECKED	TEM
DATE	12-30-2021
SCALE	N.T.S.
PROJECT NO.	03-17-DR-235
SHEET NO.	C4

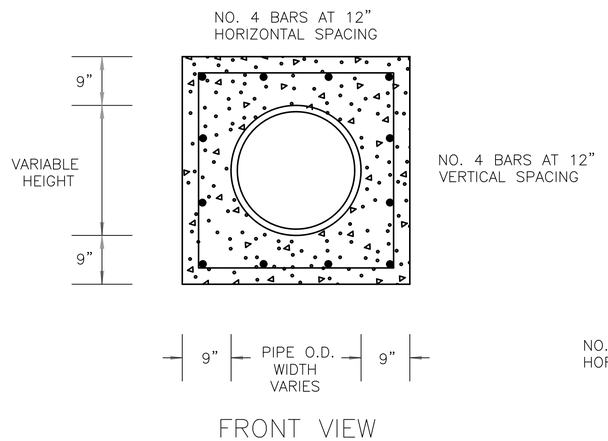

FRONT VIEW

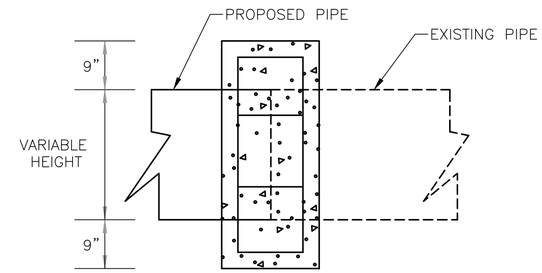

SIDE VIEW

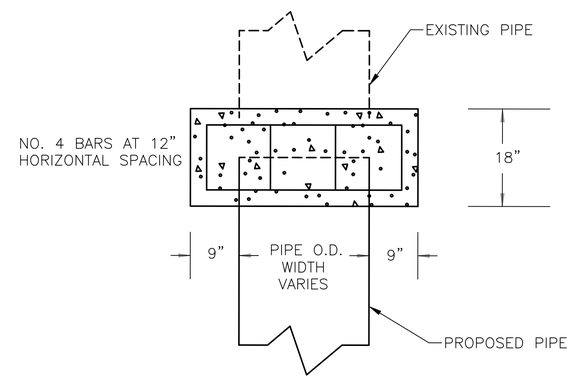

TOP VIEW

NOTE: REINFORCING STEEL SHALL HAVE MIN. 3" COVER.

PIPE EXTENSION
REINFORCED CONCRETE COLLAR DETAIL

REVISIONS	DATE

CITY OF LITTLE ROCK, ARKANSAS
BRIARWOOD AREA DRAINAGE IMPROVEMENTS

SPECIAL DETAILS

DEPARTMENT OF PUBLIC WORKS
CIVIL ENGINEERING
701 W. MARKHAM
LITTLE ROCK, ARKANSAS 72201

STATE OF ARKANSAS
LICENSED PROFESSIONAL ENGINEER
No.18314
RICHARD C. CORBYN
Digitally Signed 12/30/2021

DRAWN BY	MJM
DESIGNED	RCC
CHECKED	TEM
DATE	12-30-2021
SCALE	N.T.S.
PROJECT NO.	03-17-DR-235
SHEET NO.	C5

GENERAL NOTES:

CONCRETE: CONCRETE SHALL BE POURED IN THE DRY. ALL CONCRETE SHALL BE CLASS S WITH A MINIMUM 28 DAY COMPRESSIVE STRENGTH F'C=3,500 PSI.

REINFORCING STEEL: ALL REINFORCING STEEL SHALL CONFORM TO AASHTO M31 OR M53, GRADE 60.

LAP LENGTH FOR # 4 BARS SHALL BE 1'-9" MINIMUM

ALL MATERIALS AND WORK REQUIRED TO CONSTRUCT THE CONCRETE SLAB BELOW THE BRIDGE SHALL BE PAID AT THE UNIT PRICE BID PER CUBIC YARD FOR "REINFORCED CONCRETE".

SUBGRADE PREPARATION FOR CONCRETE SLAB BELOW BRIDGE SHALL MATCH THE SUBGRADE PREPARATION REQUIRED FOR THE PROPOSED CHANNEL.

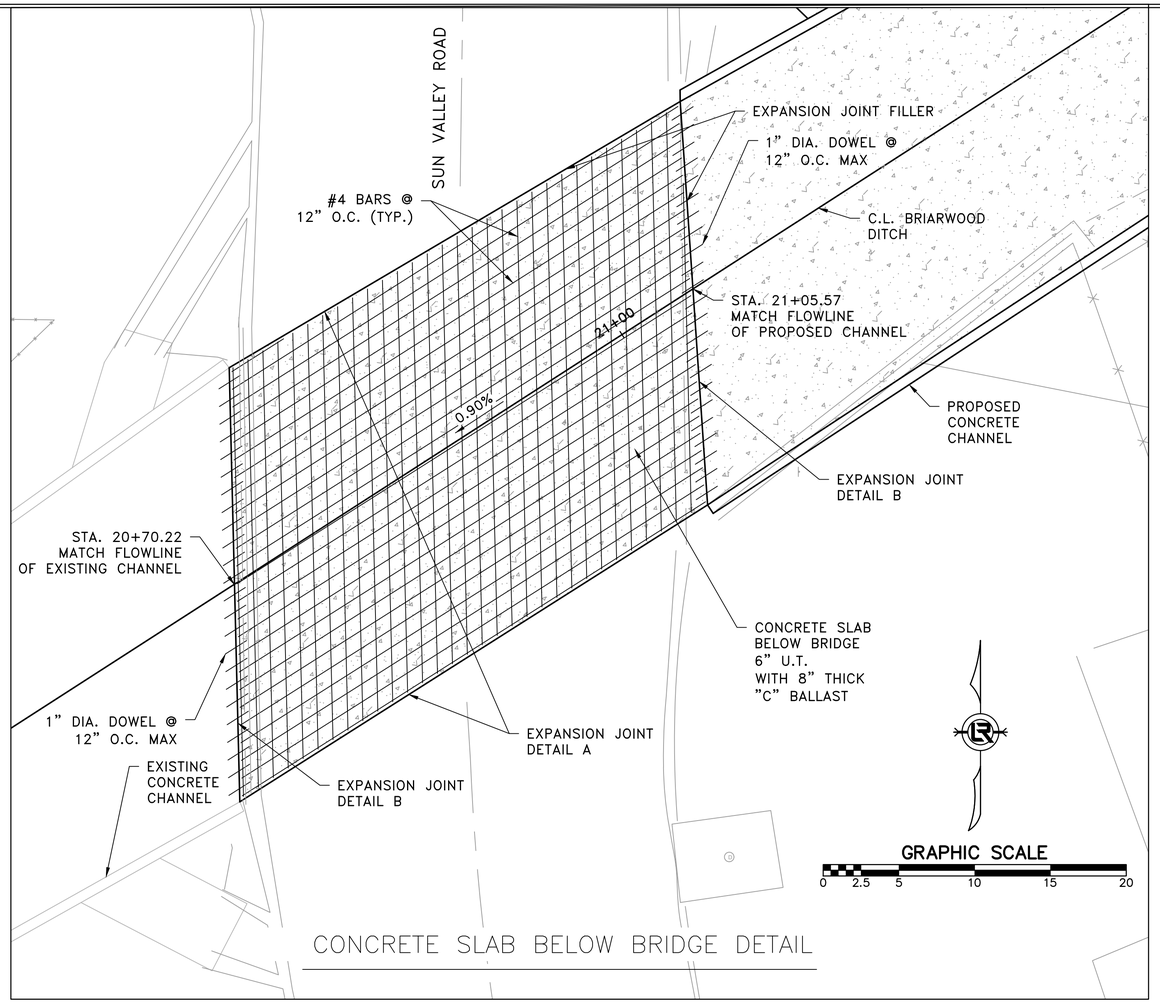

CONCRETE SLAB BELOW BRIDGE DETAIL

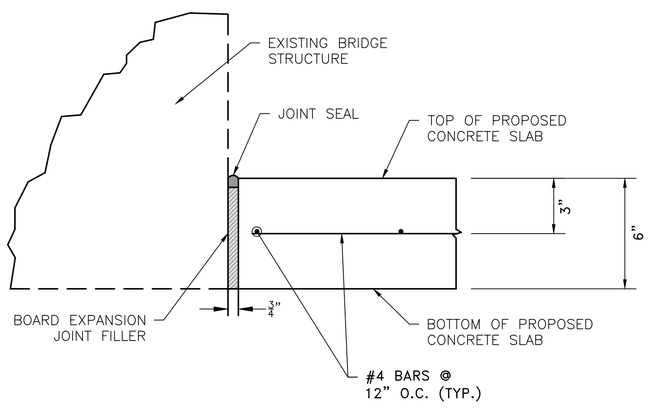

EXPANSION JOINT FOR CONCRETE SLAB

DETAIL A

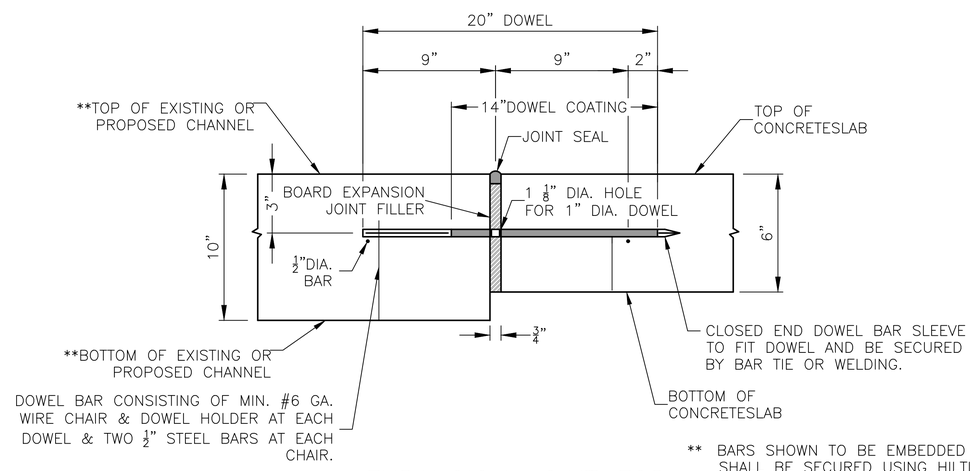

EXPANSION JOINT FOR CONCRETE SLAB

DETAIL B

** BARS SHOWN TO BE EMBEDDED INTO EXISTING CHANNEL SHALL BE SECURED USING HILTI HIT RE500 EPOXY ANCHOR OR APPROVED EQUAL. ALL BARS SHALL BE EMBEDDED TO DEPTH SHOWN IN DETAIL IN STRICT ACCORDANCE WITH MANUFACTURER'S INSTRUCTIONS. HOLES FOR EMBEDDED BARS SHALL BE DRILLED 1/4" LARGER IN DIAMETER THAN THE BAR.

REVISIONS	DATE

CITY OF LITTLE ROCK, ARKANSAS
BRIARWOOD AREA DRAINAGE IMPROVEMENTS

SPECIAL DETAILS

DEPARTMENT OF PUBLIC WORKS
CIVIL ENGINEERING
701 W. MARKHAM
LITTLE ROCK, ARKANSAS 72201

STATE OF ARKANSAS LICENSED PROFESSIONAL ENGINEER No.18314 RICHARD C. COEPLYN
Digitally Signed 12/30/2021

DRAWN BY	RCC
DESIGNED	RCC
CHECKED	DRG
DATE	12-30-2021
SCALE	N.T.S.
PROJECT NO.	03-17-DR-235
SHEET NO.	C6

SURVEY BENCHMARKS				
NO.	DESCRIPTION	NORTHING	EASTING	ELEV.
1	TRAV, 60D NAIL	151437.3670	1205160.1585	330.566
2	TRAV, 60D NAIL	151237.0650	1205087.3919	327.586
40	TRAV, 60D NAIL	151404.0112	1205578.2806	333.176
50	TRAV, 60D NAIL	151264.2947	1205078.8691	327.832
55	TRAV, 60D NAIL	151707.4306	1205882.8955	339.016
56	TRAV, 60D NAIL	151682.6447	1205581.9351	338.500
58	TRAV, $\frac{5}{8}$" REBAR	151695.5964	1206111.8016	334.236
100	TBM, CHSQ N. EDGE SDMH	151437.2247	1205303.2972	331.536
101	TRAV, 60D NAIL	151191.6488	1205587.0883	333.536
102	TRAV, 60D NAIL	151424.9792	1206037.0791	351.306
103	TRAV, PK NAIL	151571.5627	1206227.1034	357.066
104	TRAV, 60D NAIL	151425.1666	1206037.0421	351.326
105	TRAV, 60D NAIL	151195.9842	1205588.7409	333.506
900	TBM, CHISELED SQUARE	150973.5260	1205165.1025	328.074
901	TBM, CHISELED SQ CONC SD	151154.6410	1205603.3774	333.747

C.L. BRIARWOOD DITCH COORDINATES			
STA.	TYPE	NORTHING	EASTING
19+91.91	BP	151296.2536	1205476.0045
21+55.04	PI	151384.5805	1205613.1552
25+61.23	PI	151571.6426	1205973.7067
26+51.12	PI	151620.6970	1206049.0408
27+54.95	PI	151700.0017	1206116.0603
28+50.00	EP	151768.3768	1206182.0787

CONTROL POINT

BENCHMARK

Basis of Bearings:
All Coordinates are Grid.
For Stakeout use CF = 1.00000000
Control Points 1 and 2 were established as determined by GPS
RTK readings on January 19, 2017 based upon the PAGIS Dial-Up System.
Original Grid Coordinates based on Arkansas Grid North Zone 0301
Horizontal Datum: NAD 83
Vertical Datum: NAVD 88
Elevations for project based upon GPS RTK readings to Control Point 1.
Convergence Angle at Control Point 1 is 00°12'27.30836" Left.
Point 1 Latitude = N 34°44'55.86419"
Point 1 Longitude = W 092°21'24.25757"
Job Location is near the intersection of Choctaw Road and Sun Valley
Road and the intersection of Sun Valley Road and Flag Road in Little Rock,
Pulaski County, Arkansas.

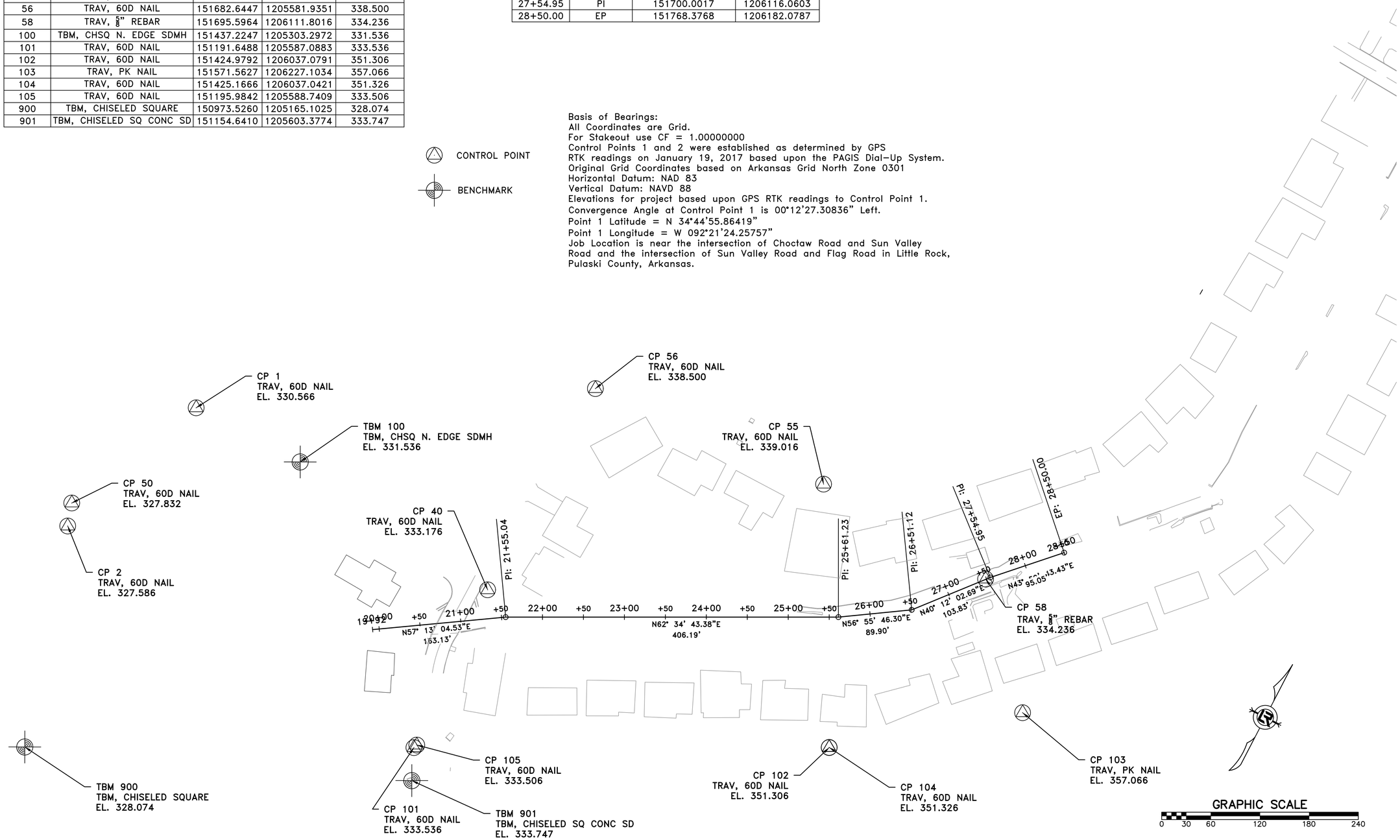

REVISIONS	DATE

CITY OF LITTLE ROCK, ARKANSAS
BRIARWOOD AREA DRAINAGE IMPROVEMENTS

FIELD TIES/LAYOUT SHEET

DEPARTMENT OF PUBLIC WORKS
CIVIL ENGINEERING
701 W. MARKHAM
LITTLE ROCK, ARKANSAS 72201

STATE OF ARKANSAS
LICENSED PROFESSIONAL ENGINEER
No.18314
RICHARD C. CORBYN
Digitally Signed 12/30/2021

DRAWN BY	AMW
DESIGNED	RCC
CHECKED	TEM
DATE	12-30-2021
SCALE	1"=60'
PROJECT NO.	03-17-DR-235
SHEET NO.	C7

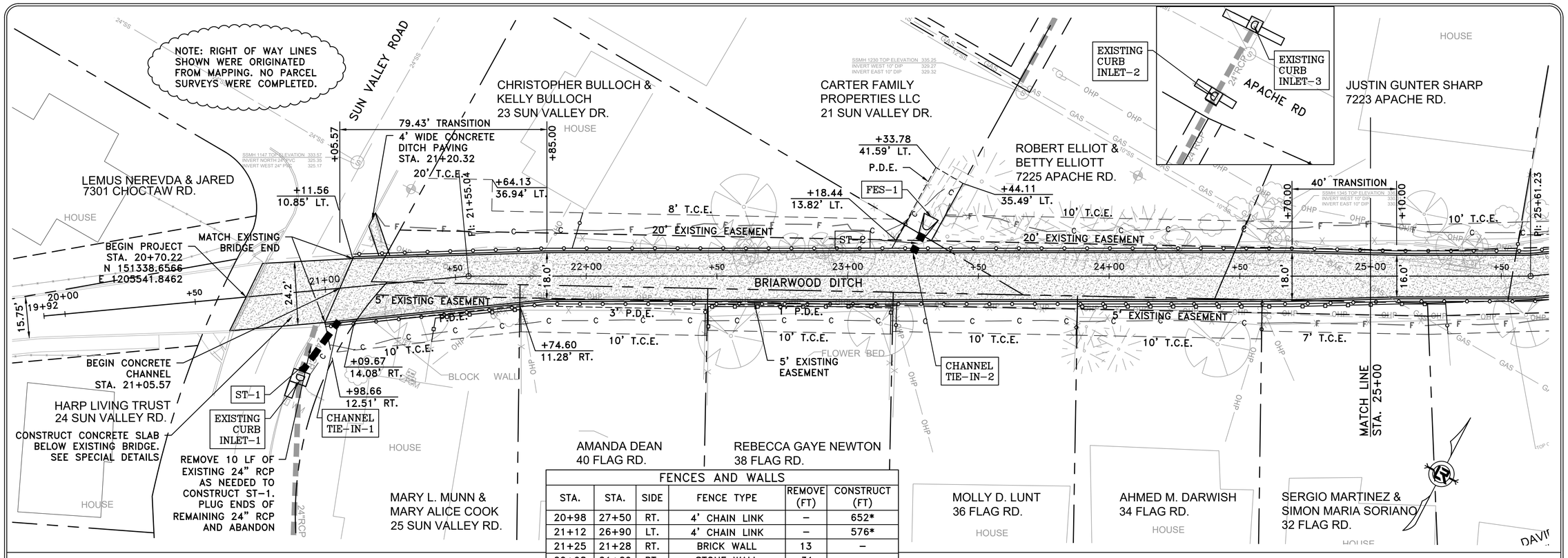

FENCES AND WALLS					
STA.	STA.	SIDE	FENCE TYPE	REMOVE (FT)	CONSTRUCT (FT)
20+98	27+50	RT.	4' CHAIN LINK	–	652*
21+12	26+90	LT.	4' CHAIN LINK	–	576*
21+25	21+28	RT.	BRICK WALL	13	–
20+98	21+29	RT.	STONE WALL	31	–
21+39	21+73	RT.	6' WOOD FENCE	51	51
21+99	23+22	LT.	4' CHAIN LINK	146	35**
21+74	22+46	RT.	4' CHAIN LINK	79	12**
22+45	23+15	RT.	6' WOOD FENCE	85	90
23+17	23+88	RT.	4' CHAIN LINK	89	23**
24+50	24+50	LT.	4' CHAIN LINK	9	12**
23+88	24+58	RT.	4' CHAIN LINK	76	14**
23+88	24+58	RT.	6' WOOD FENCE	71	71
24+50	25+58	LT.	4' CHAIN LINK	114	12**

*CONSTRUCT ADJACENT TO CHANNEL WALL ON LT. AND RT.
**FENCES SHALL BE CONSTRUCTED ALONG EXISTING/PROPOSED PROPERTY LINES IN LOCATIONS WHERE THE EXISTING FENCE IS REMOVED.
NOTE: WOOD FENCE SHOWN IN THE ABOVE TABLE SHALL BE CONSTRUCTED ADJACENT TO NEW 4' CHAIN LINK FENCE.

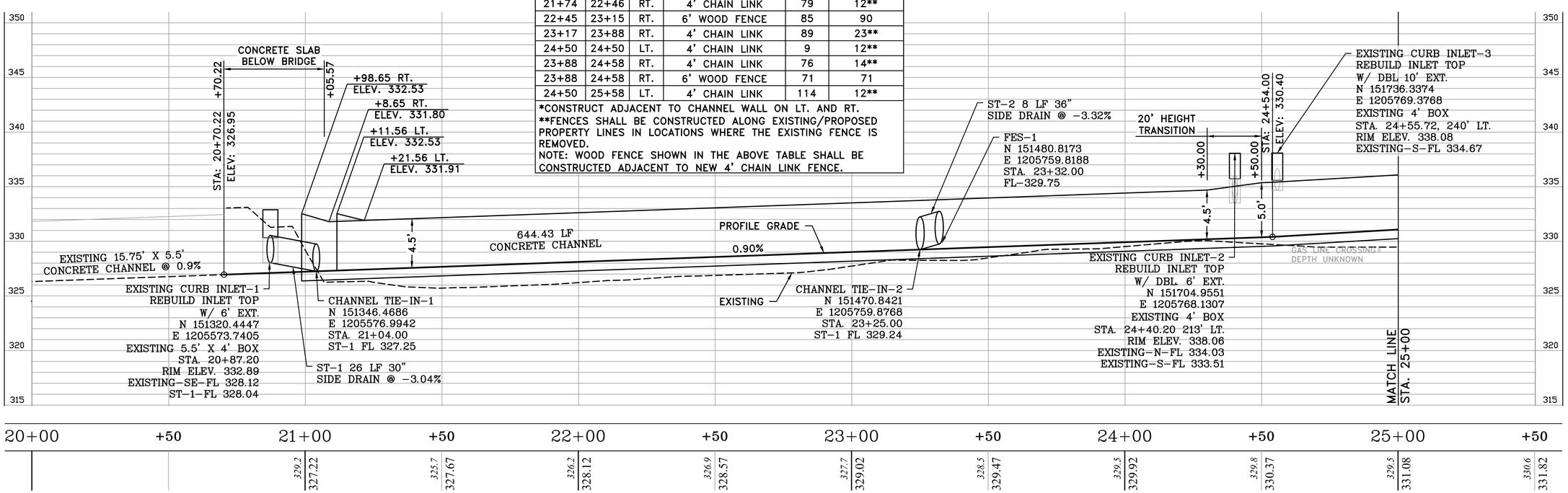

ALIGNMENT – BRIARWOOD DITCH

REVISIONS	DATE

CITY OF LITTLE ROCK, ARKANSAS
BRIARWOOD AREA DRAINAGE IMPROVEMENTS

BRIARWOOD DITCH 1
PLAN & PROFILE - STA. 20+70 TO 25+00

DEPARTMENT OF PUBLIC WORKS
CIVIL ENGINEERING
701 W. MARKHAM
LITTLE ROCK, ARKANSAS 72201

STATE OF ARKANSAS LICENSED PROFESSIONAL ENGINEER No.18314 RICHARD C. CORBYN
Digitally Signed 12/30/2021

DRAWN BY	MJM
DESIGNED	RCC
CHECKED	TEM
DATE	12-30-2021
SCALE	H: 1"=20' V: 1"=5'
PROJECT NO.	03-17-DR-235
SHEET NO.	C8

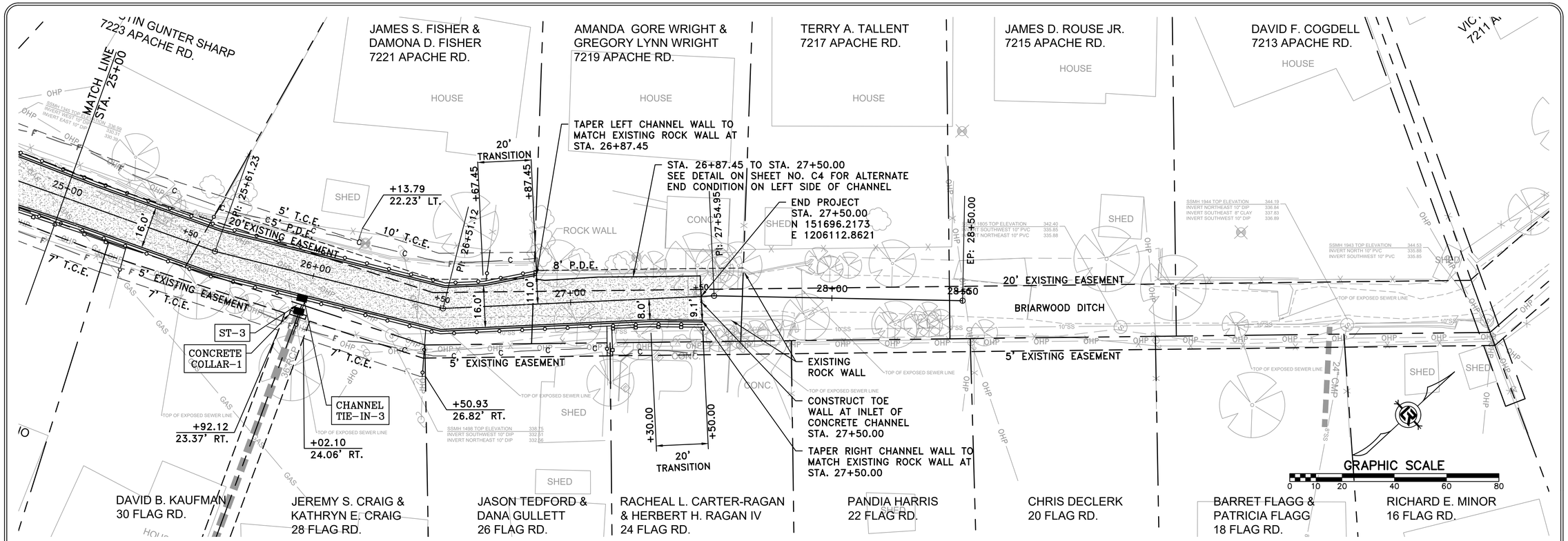

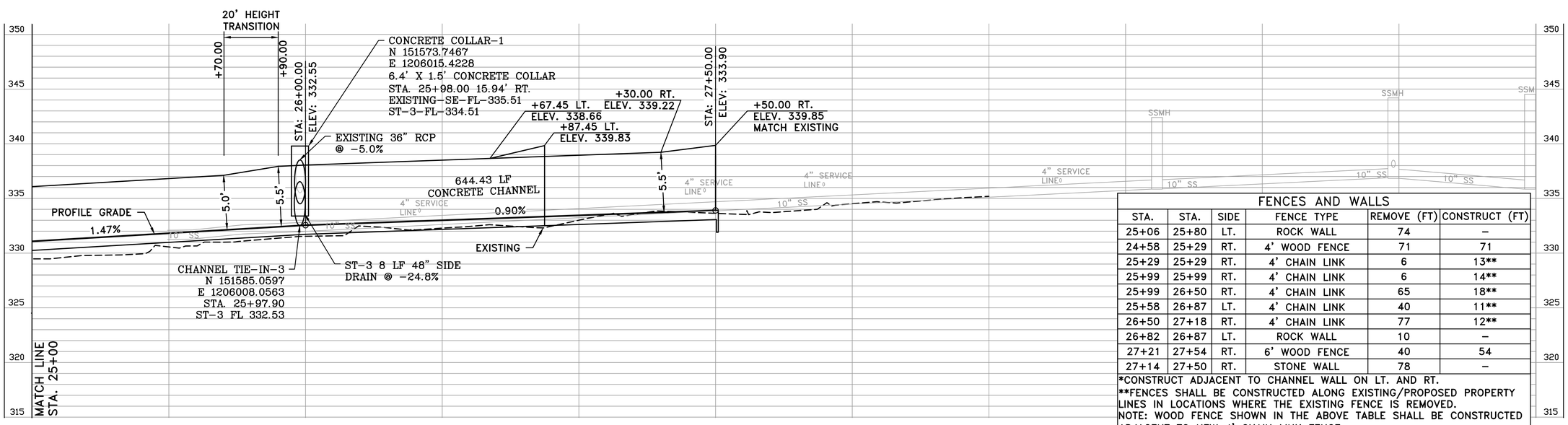

FENCES AND WALLS					
STA.	STA.	SIDE	FENCE TYPE	REMOVE (FT)	CONSTRUCT (FT)
25+06	25+80	LT.	ROCK WALL	74	–
24+58	25+29	RT.	4' WOOD FENCE	71	71
25+29	25+29	RT.	4' CHAIN LINK	6	13**
25+99	25+99	RT.	4' CHAIN LINK	6	14**
25+99	26+50	RT.	4' CHAIN LINK	65	18**
25+58	26+87	LT.	4' CHAIN LINK	40	11**
26+50	27+18	RT.	4' CHAIN LINK	77	12**
26+82	26+87	LT.	ROCK WALL	10	–
27+21	27+54	RT.	6' WOOD FENCE	40	54
27+14	27+50	RT.	STONE WALL	78	–

*CONSTRUCT ADJACENT TO CHANNEL WALL ON LT. AND RT.
**FENCES SHALL BE CONSTRUCTED ALONG EXISTING/PROPOSED PROPERTY LINES IN LOCATIONS WHERE THE EXISTING FENCE IS REMOVED.
NOTE: WOOD FENCE SHOWN IN THE ABOVE TABLE SHALL BE CONSTRUCTED ADJACENT TO NEW 4' CHAIN LINK FENCE.

ALIGNMENT – BRIARWOOD DITCH

REVISIONS	DATE

CITY OF LITTLE ROCK, ARKANSAS
BRIARWOOD AREA DRAINAGE IMPROVEMENTS

BRIARWOOD DITCH 2
PLAN & PROFILE - STA. 25+00 TO 27+50

DEPARTMENT OF PUBLIC WORKS
CIVIL ENGINEERING
701 W. MARKHAM
LITTLE ROCK, ARKANSAS 72201

STATE OF ARKANSAS
LICENSED PROFESSIONAL ENGINEER
No.18314
RICHARD C. COEFYN
Digitally Signed 12/30/2021

DRAWN BY	MJM
DESIGNED	RCC
CHECKED	TEM
DATE	12-30-2021
SCALE	H: 1"=20' V: 1"=5'
PROJECT NO.	03-17-DR-235
SHEET NO.	C9

PHASING LEGEND
PHASE 1 (INITIAL STRIP AND DEMOLITION)
PHASE 2 (NEW DRAINAGE IN PLACE AND GRADING COMPLETE)
PHASE 3 (CONCRETE PLACED, GRASS NOT YET ESTABLISHED)

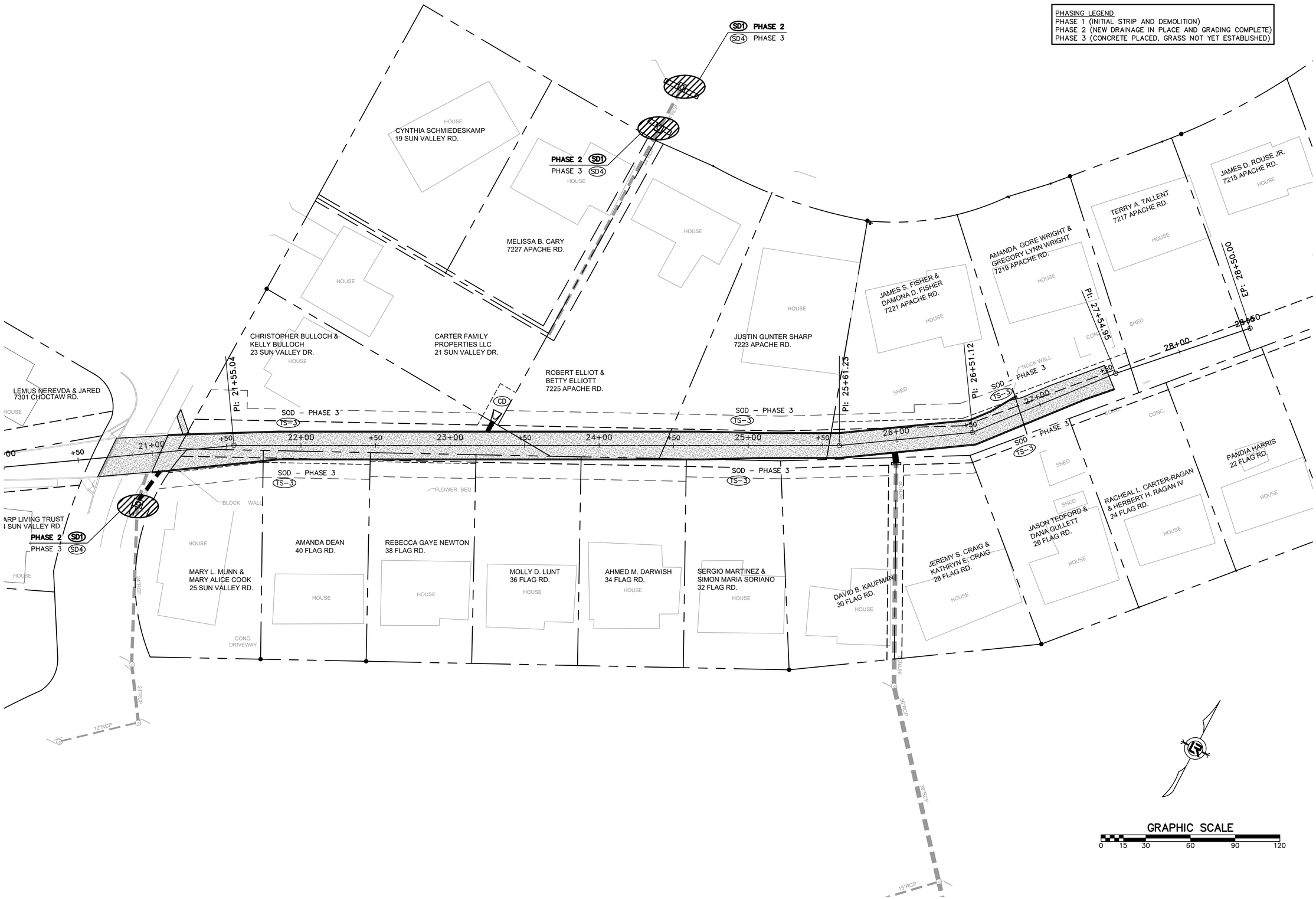

REVISIONS	DATE

CITY OF LITTLE ROCK, ARKANSAS
BRIARWOOD AREA DRAINAGE IMPROVEMENTS

EROSION CONTROL

DEPARTMENT OF PUBLIC WORKS
CIVIL ENGINEERING
701 W. MARKHAM
LITTLE ROCK, ARKANSAS 72201

STATE OF ARKANSAS
LICENSED PROFESSIONAL ENGINEER
No.18314
RICHARD C. CORBYN
Digitally Signed 12/30/2021

DRAWN BY	AMW
DESIGNED	AMW
CHECKED	MJM
DATE	12-30-2021
SCALE	1"=30'
PROJECT NO.	03-17-DR-235
SHEET NO.	C10

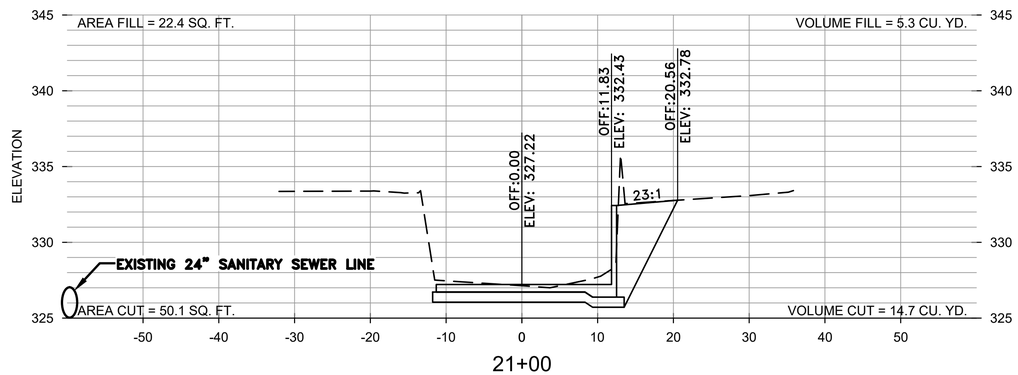

21+00

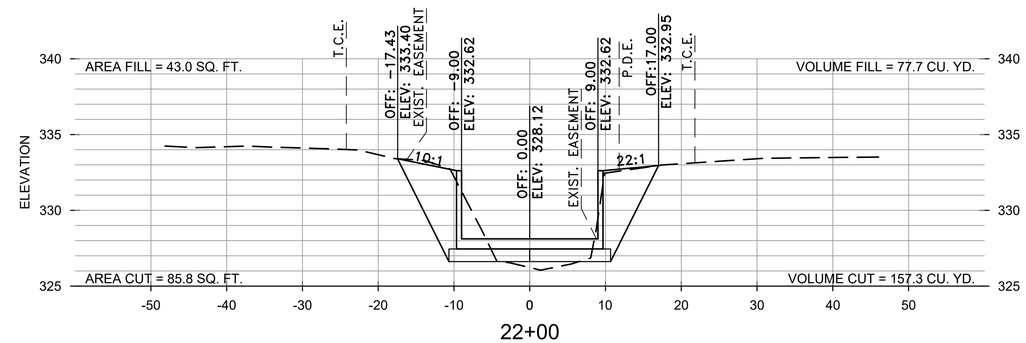

22+00

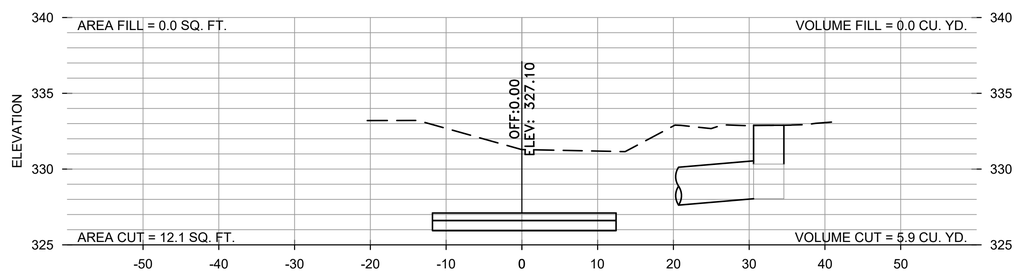

20+87.20

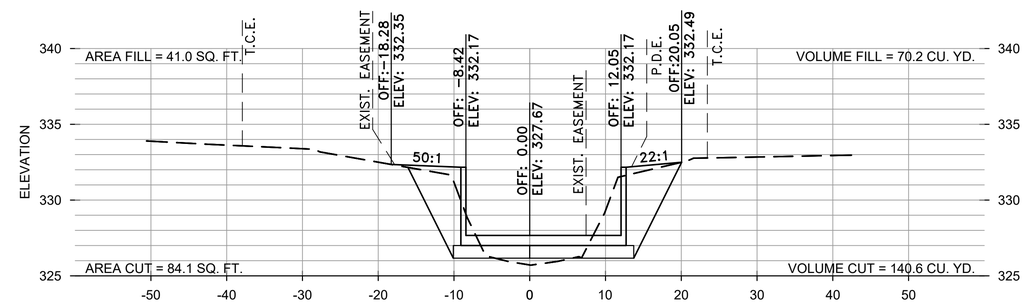

21+50

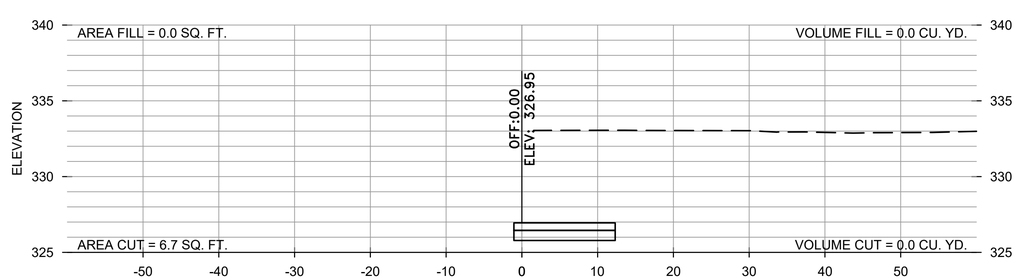

20+70.22

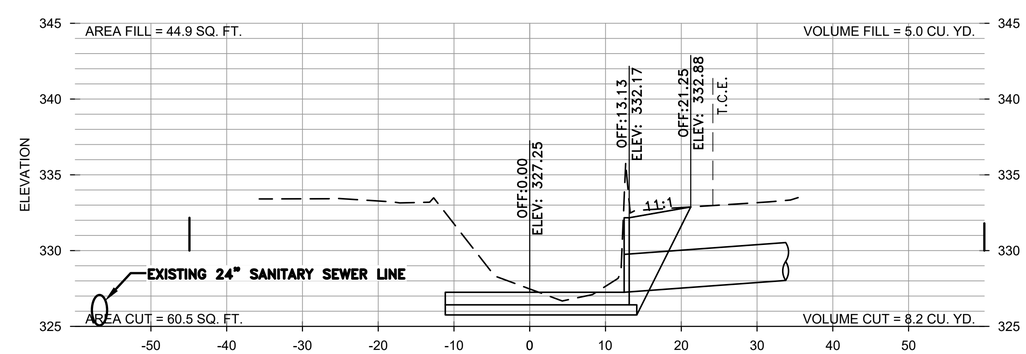

21+04

REVISIONS	DATE

CITY OF LITTLE ROCK, ARKANSAS
BRIARWOOD AREA DRAINAGE IMPROVEMENTS

CROSS SECTIONS
STA 20+70.22 TO 22+00

DEPARTMENT OF PUBLIC WORKS
CIVIL ENGINEERING
701 W. MARKHAM
LITTLE ROCK, ARKANSAS 72201

DRAWN BY	MJM
DESIGNED	RCC
CHECKED	TEM
DATE	12-30-2021
SCALE	H: 1"=10' V: 1"=5'
PROJECT NO.	03-17-DR-235
SHEET NO.	C11

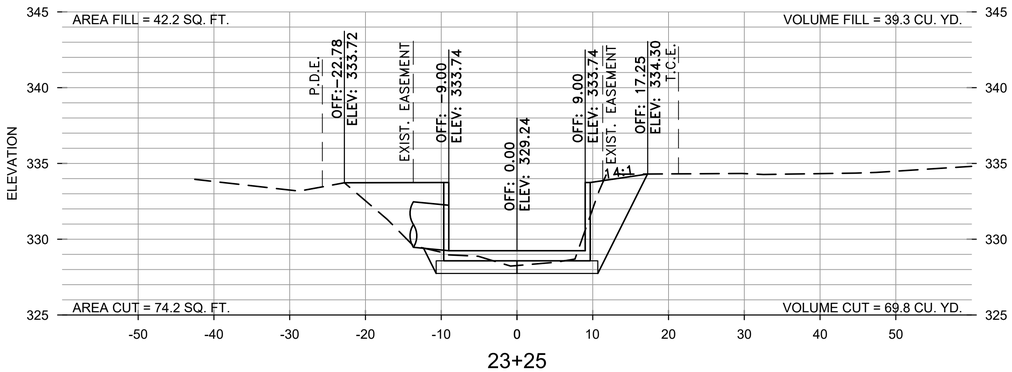

23+25

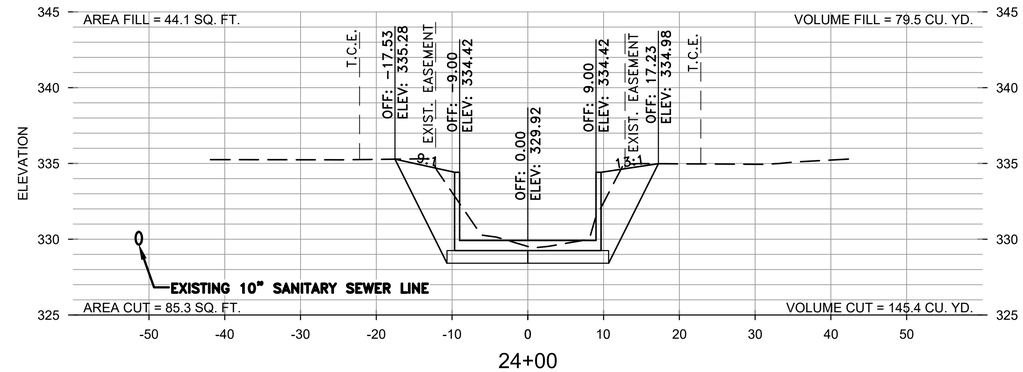

24+00

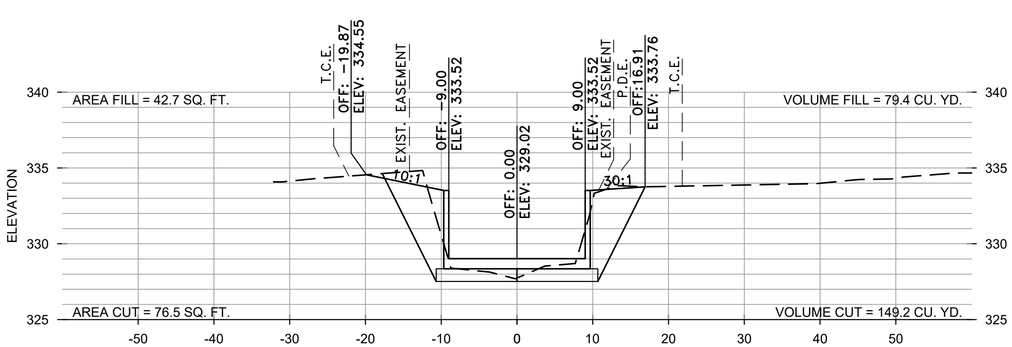

23+00

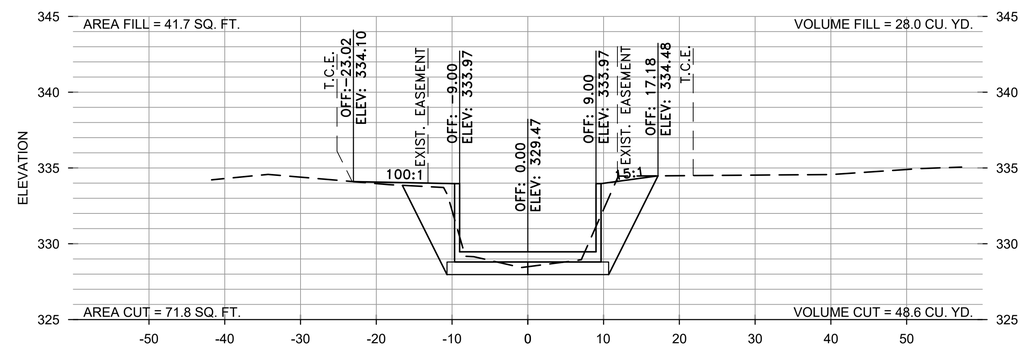

23+50

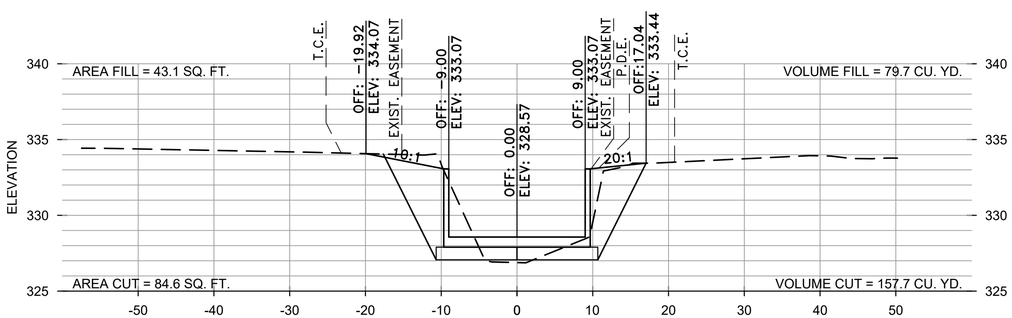

22+50

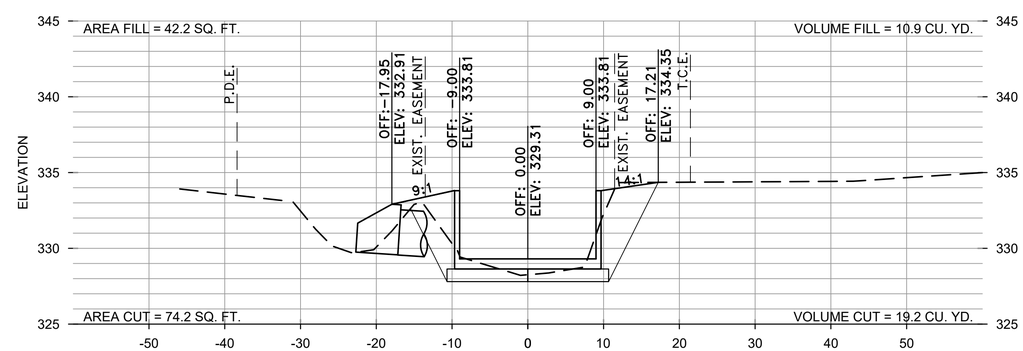

23+32

REVISIONS	DATE

CITY OF LITTLE ROCK, ARKANSAS
BRIARWOOD AREA DRAINAGE IMPROVEMENTS

CROSS SECTIONS
STA 22+50 TO 24+00

DEPARTMENT OF PUBLIC WORKS
CIVIL ENGINEERING
701 W. MARKHAM
LITTLE ROCK, ARKANSAS 72201

DRAWN BY	MJM
DESIGNED	RCC
CHECKED	TEM
DATE	12-30-2021
SCALE	H: 1"=10' V: 1"=5'
PROJECT NO.	03-17-DR-235
SHEET NO.	C12

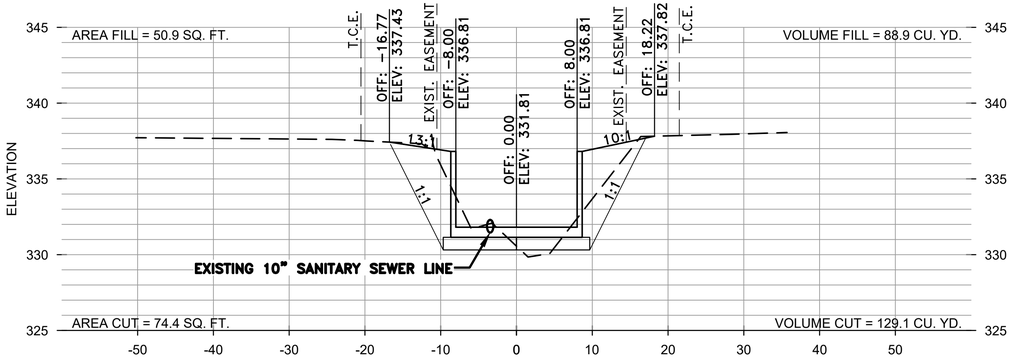

25+50

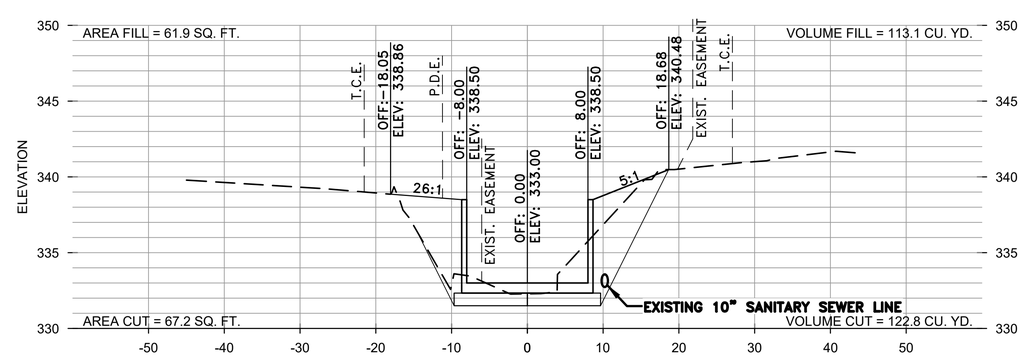

26+50

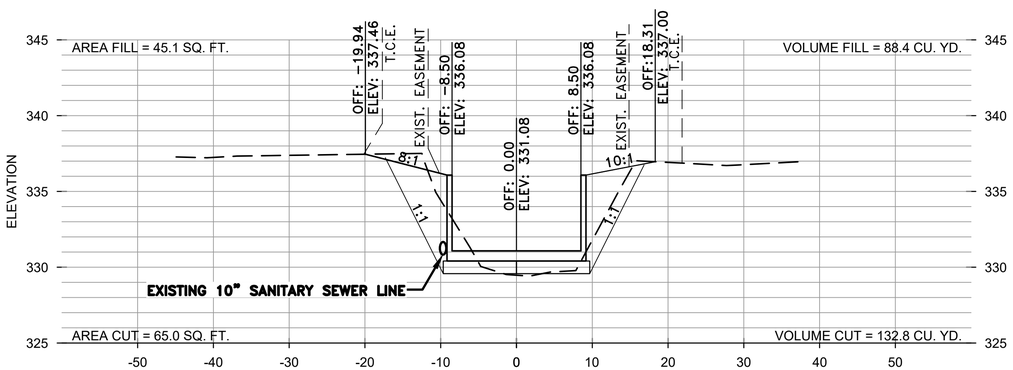

25+00

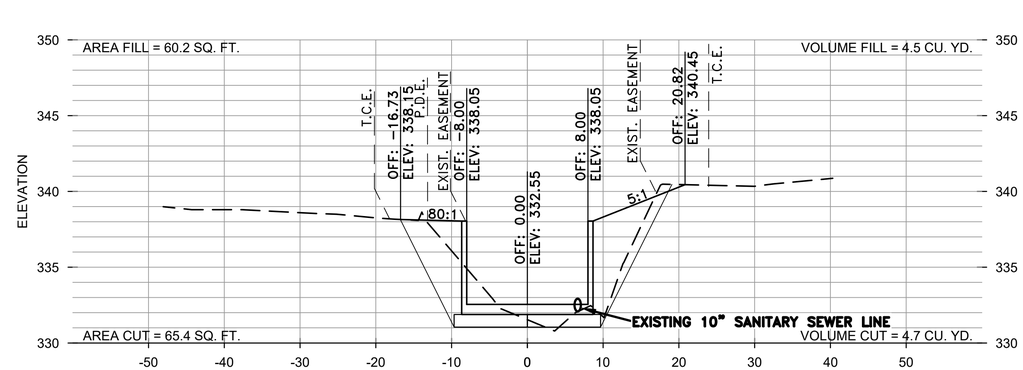

26+00

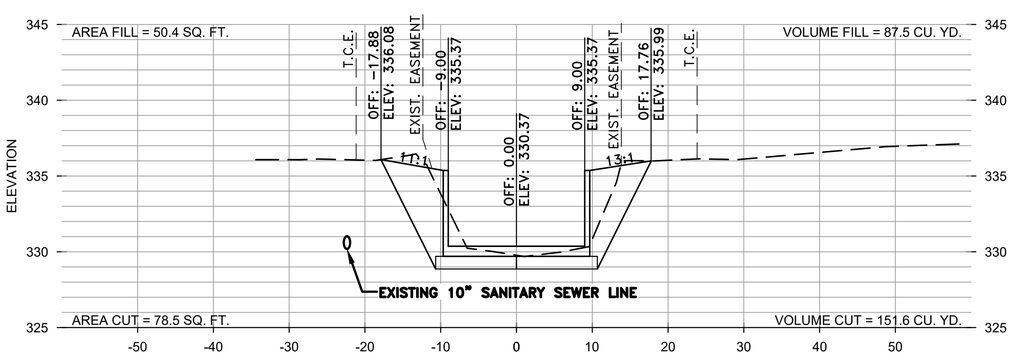

24+50

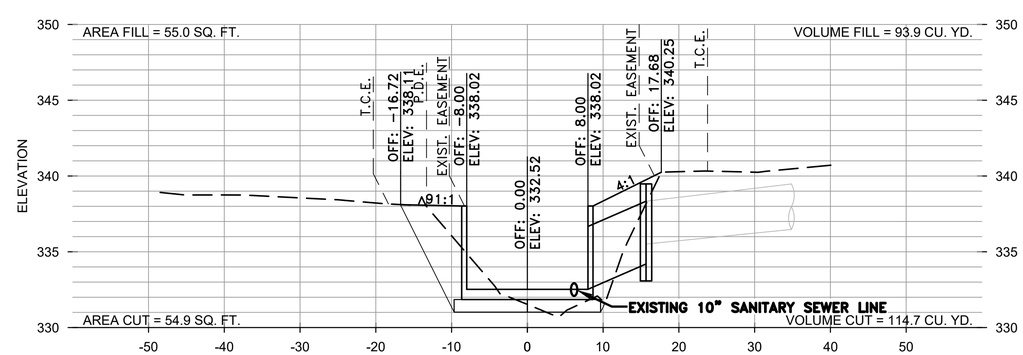

25+97.90

REVISIONS	DATE

CITY OF LITTLE ROCK, ARKANSAS
BRIARWOOD AREA DRAINAGE IMPROVEMENTS

CROSS SECTIONS
STA 24+50 TO 26+50

DEPARTMENT OF PUBLIC WORKS
CIVIL ENGINEERING
701 W. MARKHAM
LITTLE ROCK, ARKANSAS 72201

DRAWN BY	MJM
DESIGNED	RCC
CHECKED	TEM
DATE	12-30-2021
SCALE	H: 1"=10' V: 1"=5'
PROJECT NO.	03-17-DR-235
SHEET NO.	C13

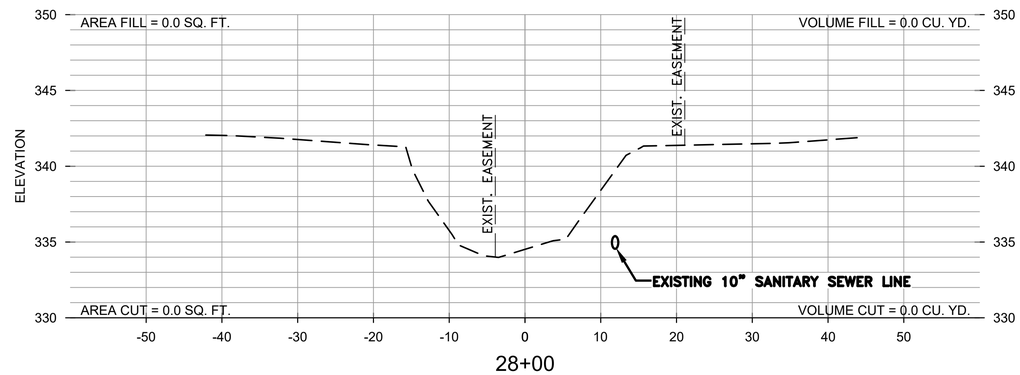

28+00

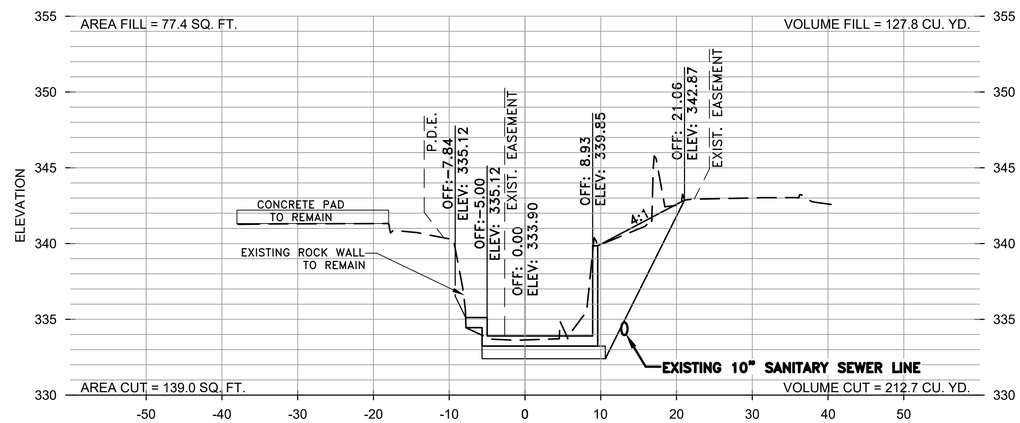

27+50

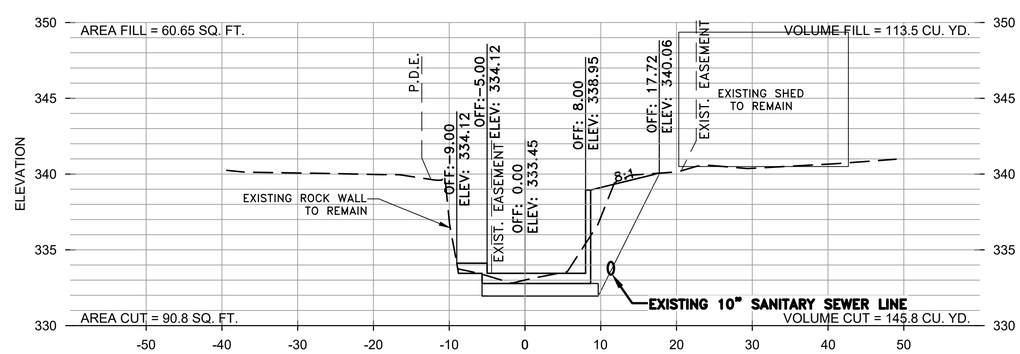

27+00

REVISIONS	DATE

CITY OF LITTLE ROCK, ARKANSAS
BRIARWOOD AREA DRAINAGE IMPROVEMENTS

CROSS SECTIONS
STA 27+00 TO 28+00

DEPARTMENT OF PUBLIC WORKS
CIVIL ENGINEERING
701 W. MARKHAM
LITTLE ROCK, ARKANSAS 72201

DRAWN BY	MJM
DESIGNED	RCC
CHECKED	TEM
DATE	12-30-2021
SCALE	H: 1"=10' V: 1"=5'
PROJECT NO.	03-17-DR-235
SHEET NO.	C14