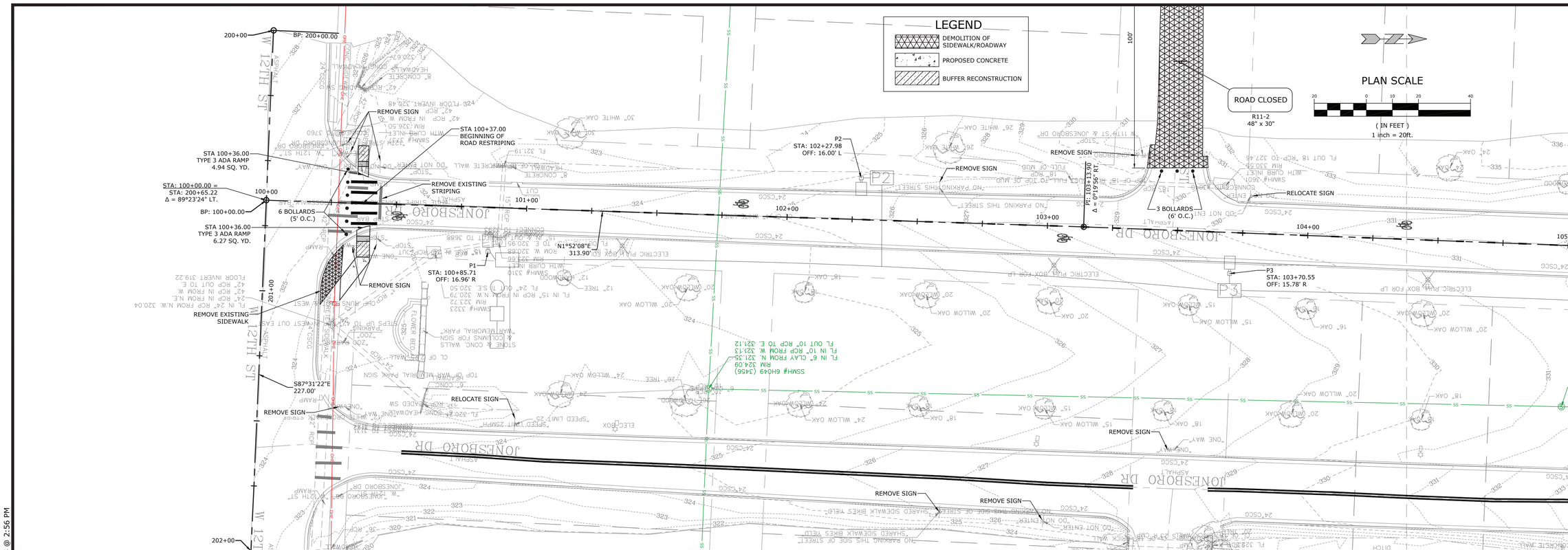

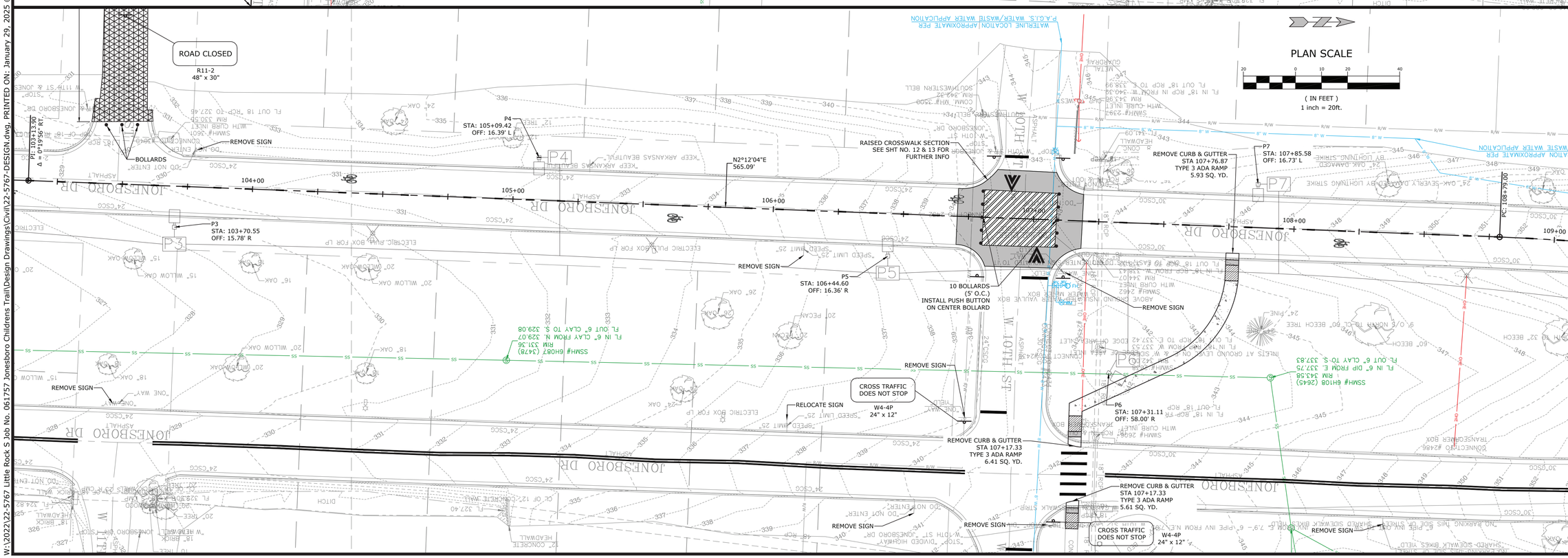

McCLELLAND CONSULTING ENGINEERS, INC.
DESIGNED TO SERVE
7302 KANIS ROAD
LITTLE ROCK, ARKANSAS 72204
PH: (501) 371-0272
HTTP://WWW.MCE.US.COM

STATE OF ARKANSAS
LICENSED PROFESSIONAL ENGINEER
No. 18021
TAYLOR CLARK
2-20-25

JOB NO. 061757
JONESBORO DR. CHILDREN'S TRAIL (LITTLE ROCK) (S)
LITTLE ROCK, ARKANSAS

811 Know what's below. Call before you dig.

REVISIONS

REV	DATE	DESCRIPTION

PLAN I

DESIGNED BY:	DRAWN BY:
WTC	WTC
DATE: 1/23/25	REVISION:
SCALE: 1" = 20'	JOB NUMBER: 22-5767

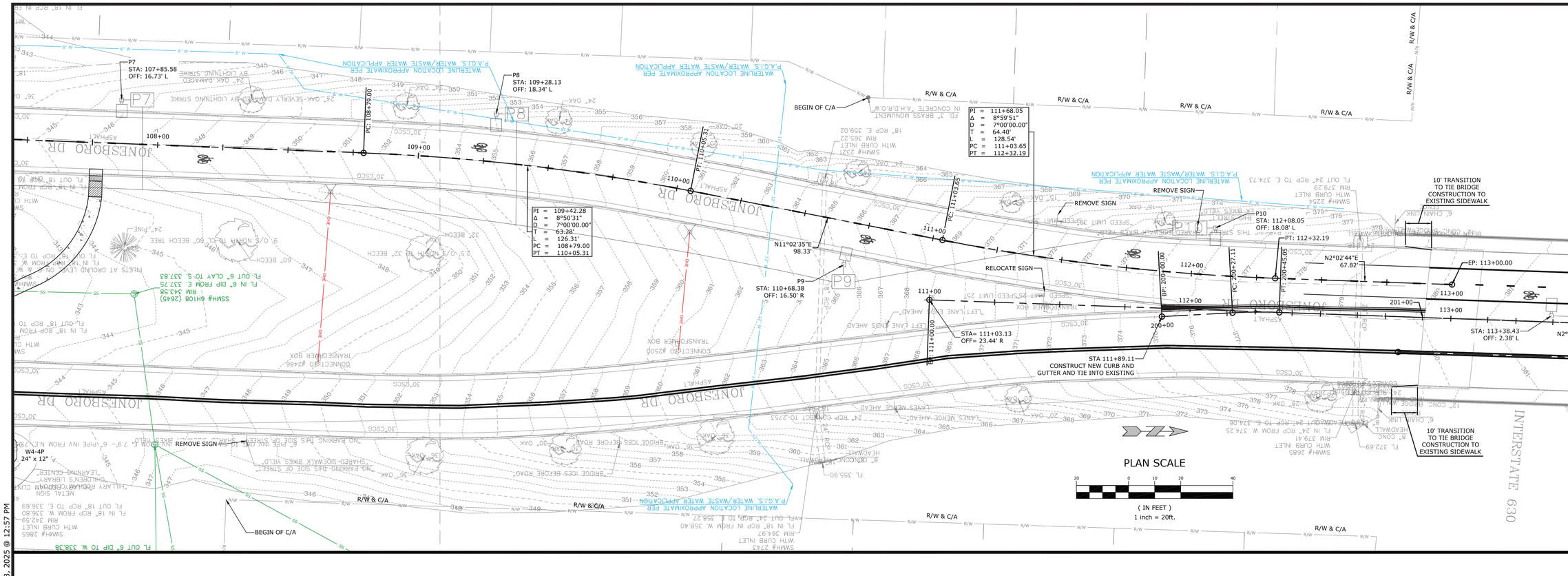

W:\2022\22-5767 Little Rock S Job No. 061757 Jonesboro Childrens Trail\Design Drawings\Civil\22-5767-DESIGN.dwg, PRINTED ON: January 23, 2025 @ 12:57 PM

McCLELLAND CONSULTING ENGINEERS, INC.
DESIGNED TO SERVE
7302 KANIS ROAD
LITTLE ROCK, ARKANSAS 72204
PH: (501) 371-0272
HTTP://WWW.MCE.US.COM

STATE OF ARKANSAS
LICENSED PROFESSIONAL ENGINEER
NO. 18021
TAYLOR CLARK
2-20-25

JOB NO. 061757
JONESBORO DR. CHILDREN'S TRAIL (LITTLE ROCK) (S)
LITTLE ROCK, ARKANSAS

811 Know what's below. Call before you dig.

REVISIONS

REV	DATE	DESCRIPTION

PLAN II

DESIGNED BY:	DRAWN BY:
WTC	WTC
DATE: 1/23/25	REVISION:
SCALE: 1" = 20'	JOB NUMBER: 22-5767

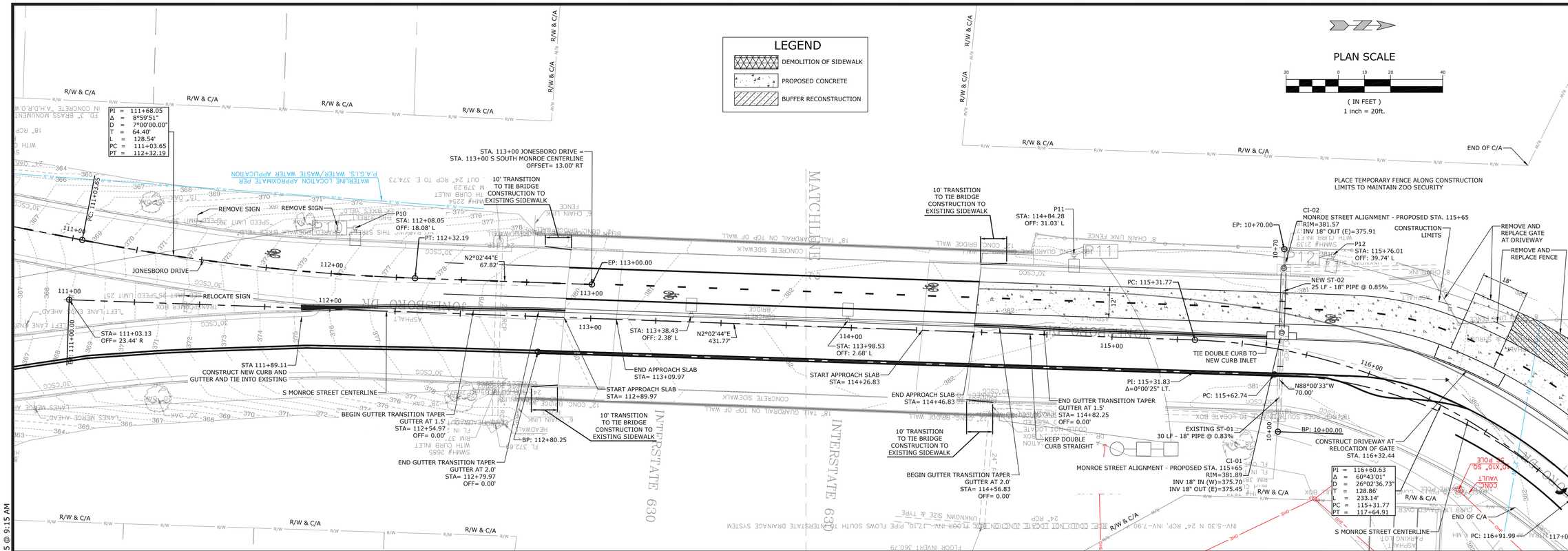

REFER TO SHEET 43
FOR EOP INFORMATION

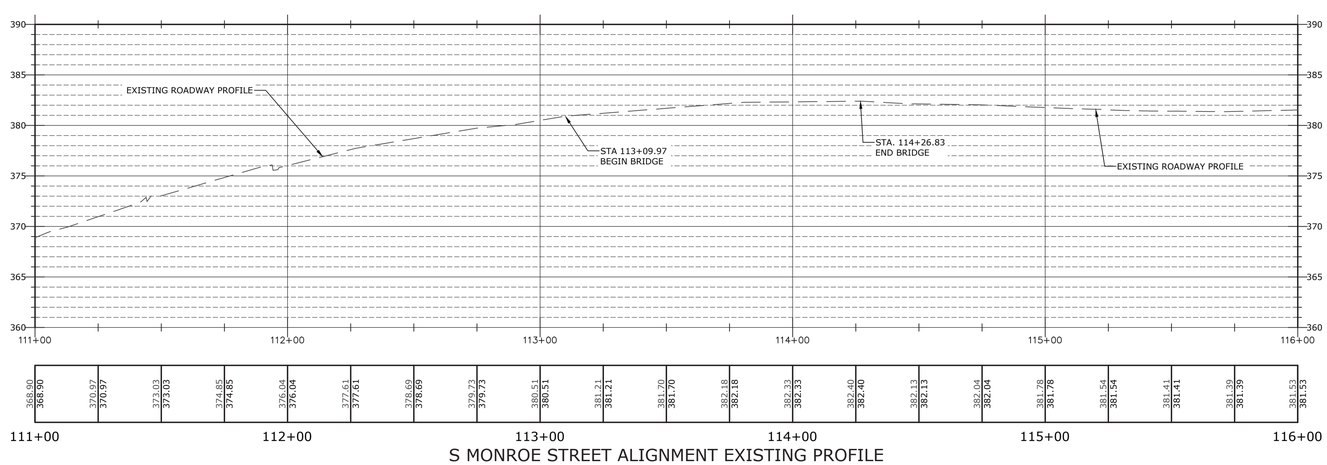

S MONROE STREET ALIGNMENT EXISTING PROFILE

SCALE:
1"= 20' HORIZ.
1"= 5' VERT.

McCLELLAND CONSULTING ENGINEERS, INC.
DESIGNED TO SERVE
7302 KANIS ROAD
LITTLE ROCK, ARKANSAS 72204
PH: (501) 371-0272
HTTP://WWW.MCE.US.COM

STATE OF ARKANSAS
LICENSED PROFESSIONAL ENGINEER
No. 18021
TAYLOR CLARK
2-20-25

JOB NO. 061757
JONESBORO DR. CHILDREN'S TRAIL (LITTLE ROCK) (S)
LITTLE ROCK, ARKANSAS

811 Know what's below. Call before you dig.

REVISIONS

REV	DATE	DESCRIPTION

PLAN & PROFILE
I

DESIGNED BY:	DRAWN BY:
WTC	WTC
DATE: 2/14/25	REVISION:
SCALE: 1" = 20'	JOB NUMBER: 22-5767

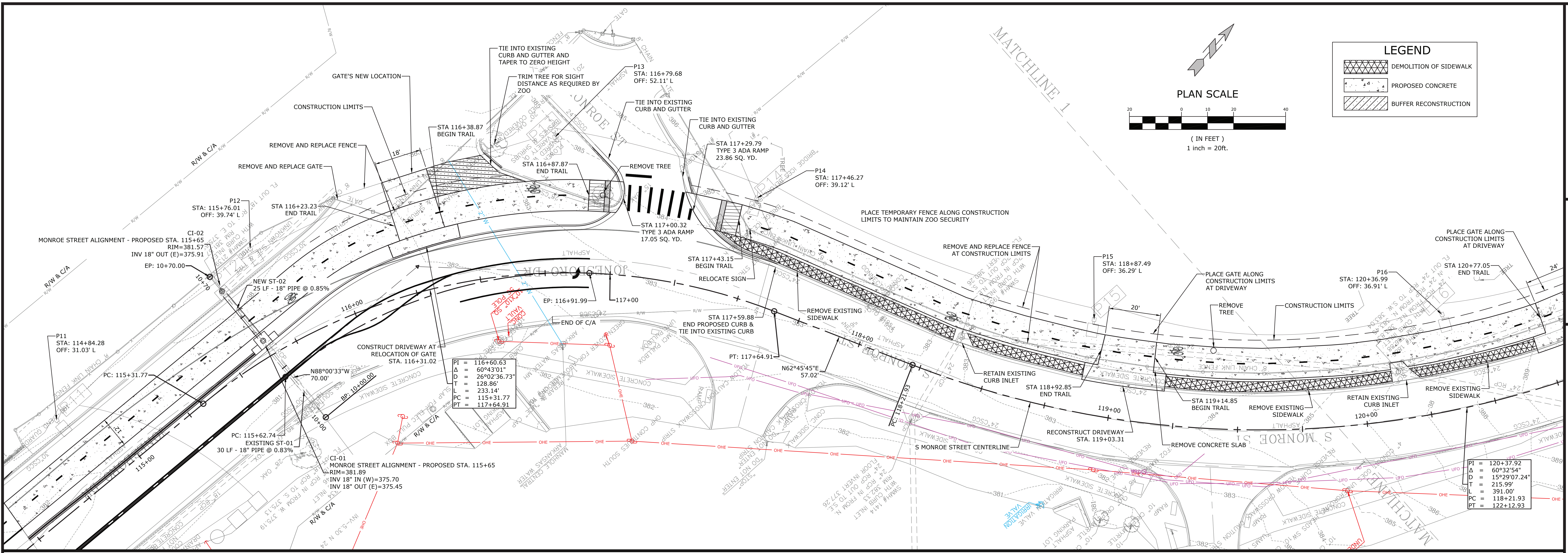

PI =	116+60.63
Δ =	60°43'01"
D =	26°02'36.73"
T =	128.86'
L =	233.14'
PC =	115+31.77
PT =	117+64.91

PI =	120+37.92
Δ =	60°32'54"
D =	15°29'07.24"
T =	215.99'
L =	391.00'
PC =	118+21.93
PT =	122+12.93

LEGEND

▩	DEMOLITION OF SIDEWALK
░	PROPOSED CONCRETE
▨	BUFFER RECONSTRUCTION

REFER TO TYPICAL SECTION FOR CONTROL POINT INFORMATION

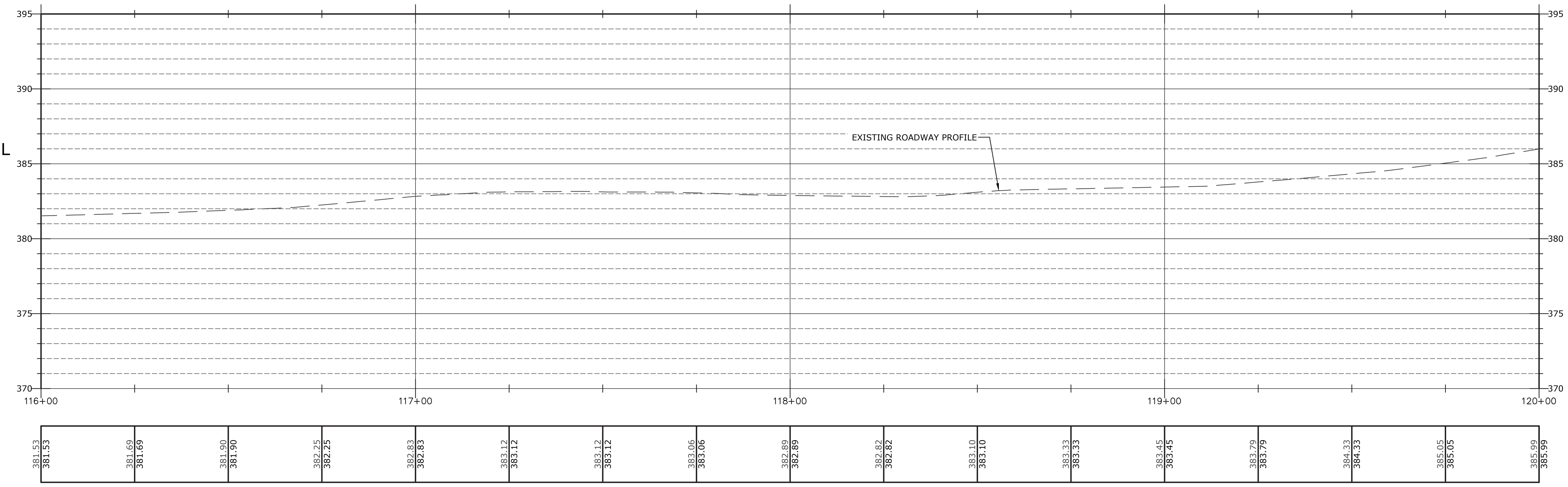

116+00 117+00 118+00 119+00 120+00

S MONROE STREET ALIGNMENT EXISTING PROFILE

SCALE:
1"= 20' HORIZ.
1"= 5' VERT.

W:\2022\22-5767 Little Rock S Job No. 061757 Jonesboro Childrens Trail\Design Drawings\Civil\22-5767-DESIGN.dwg, PRINTED ON: February 17, 2025 @ 9:19 AM

McCLELLAND CONSULTING ENGINEERS, INC.
DESIGNED TO SERVE
7302 KANIS ROAD
LITTLE ROCK, ARKANSAS 72204
PH: (501) 371-0272
HTTP://WWW.MCE.US.COM

STATE OF ARKANSAS
LICENSED PROFESSIONAL ENGINEER
No. 18021
TAYLOR CLARK
Taylor Clark
2-20-25

©2025

JOB NO. 061757
JONESBORO DR. CHILDREN'S TRAIL (LITTLE ROCK) (S)
LITTLE ROCK, ARKANSAS

811. Know what's below. Call before you dig.

REVISIONS

REV	DATE	DESCRIPTION

PLAN & PROFILE II

DESIGNED BY: WTC	DRAWN BY: WTC
DATE: 2/14/25	REVISION:
SCALE: 1" = 20'	JOB NUMBER: 22-5767

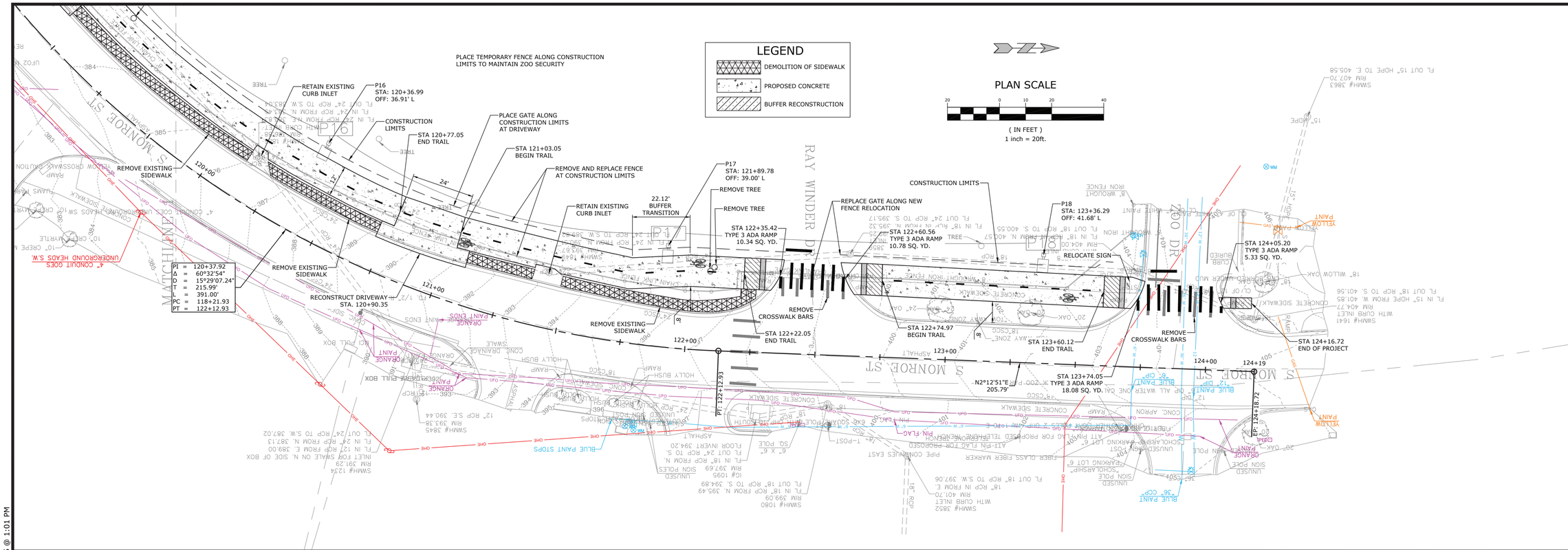

REFER TO TYPICAL SECTIONS FOR CONTROL POINT INFORMATION

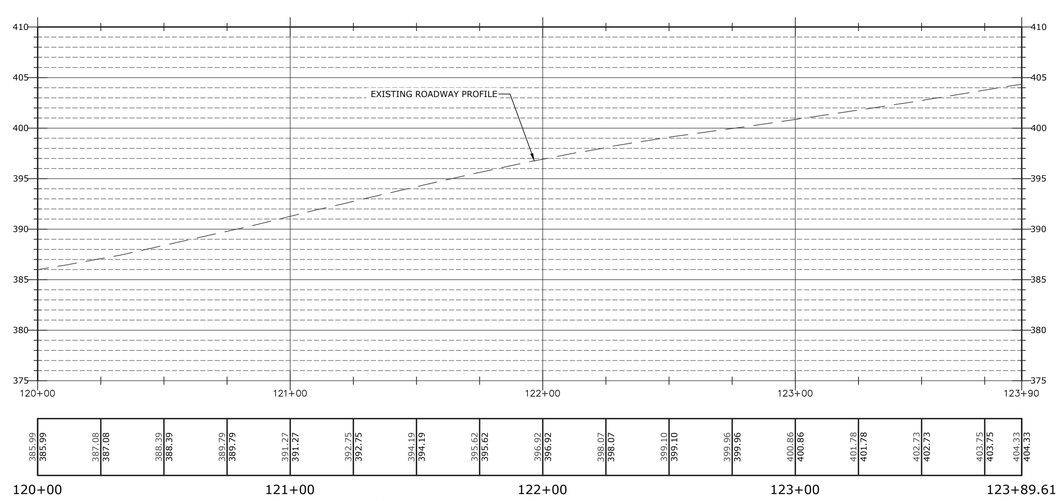

S MONROE STREET ALIGNMENT EXISTING PROFILE

SCALE:
1"= 20' HORIZ.
1"= 5' VERT.

McCLELLAND CONSULTING ENGINEERS, INC.
DESIGNED TO SERVE
7302 KANIS ROAD
LITTLE ROCK, ARKANSAS 72204
PH: (501) 371-0272
HTTP://WWW.MCE.US.COM

STATE OF ARKANSAS
LICENSED PROFESSIONAL ENGINEER
No.18021
Taylor Clark
TAYLOR CLARK
2-20-25

JOB NO. 061757
JONESBORO DR. CHILDREN'S TRAIL (LITTLE ROCK) (S)
LITTLE ROCK, ARKANSAS

811 Know what's below. Call before you dig.

REVISIONS

REV	DATE	DESCRIPTION

PLAN & PROFILE III

DESIGNED BY:	DRAWN BY:
WTC	WTC
DATE: 1/23/25	REVISION:
SCALE: 1" = 20'	JOB NUMBER: 22-5767

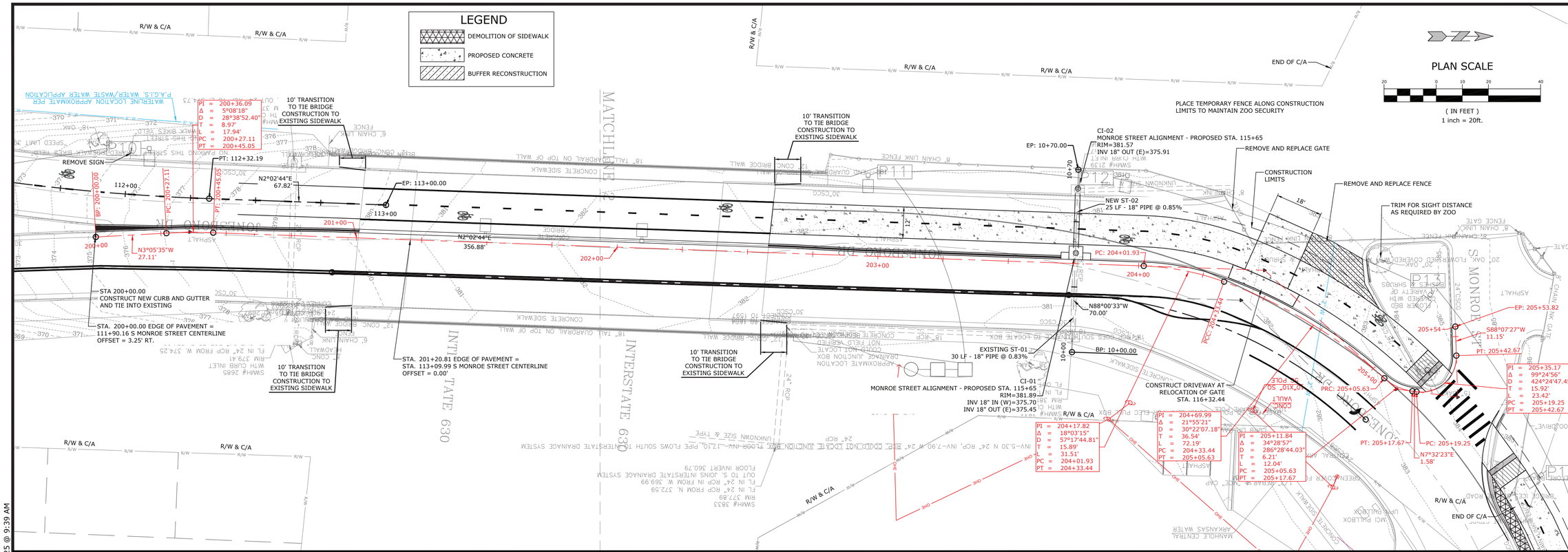

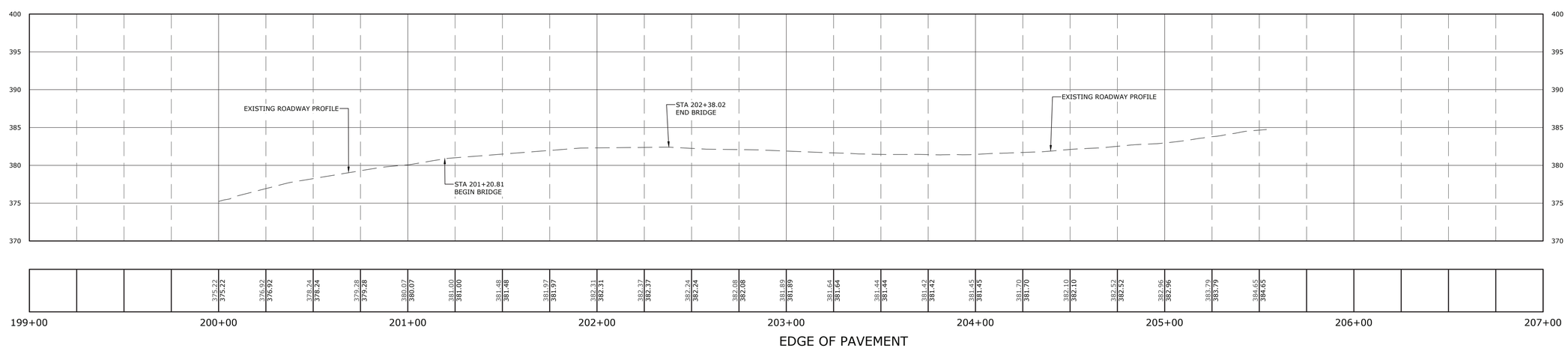

SCALE:
1"= 20' HORIZ.
1"= 5' VERT.

McCLELLAND CONSULTING ENGINEERS, INC.
DESIGNED TO SERVE
7302 KANIS ROAD
LITTLE ROCK, ARKANSAS 72204
PH: (501) 371-0272
HTTP://WWW.MCE.US.COM

STATE OF ARKANSAS
LICENSED PROFESSIONAL ENGINEER
No.18021
TAYLOR CLARK
2-20-25

JOB NO. 061757
JONESBORO DR. CHILDREN'S TRAIL (LITTLE ROCK) (S)
LITTLE ROCK, ARKANSAS

811 Know what's below. Call before you dig.

REVISIONS

REV	DATE	DESCRIPTION

GUTTER ALIGNMENT

DESIGNED BY:	DRAWN BY:
WTC	WTC
DATE: 2/14/25	REVISION:
SCALE: 1" = 20'	JOB NUMBER: 22-5767

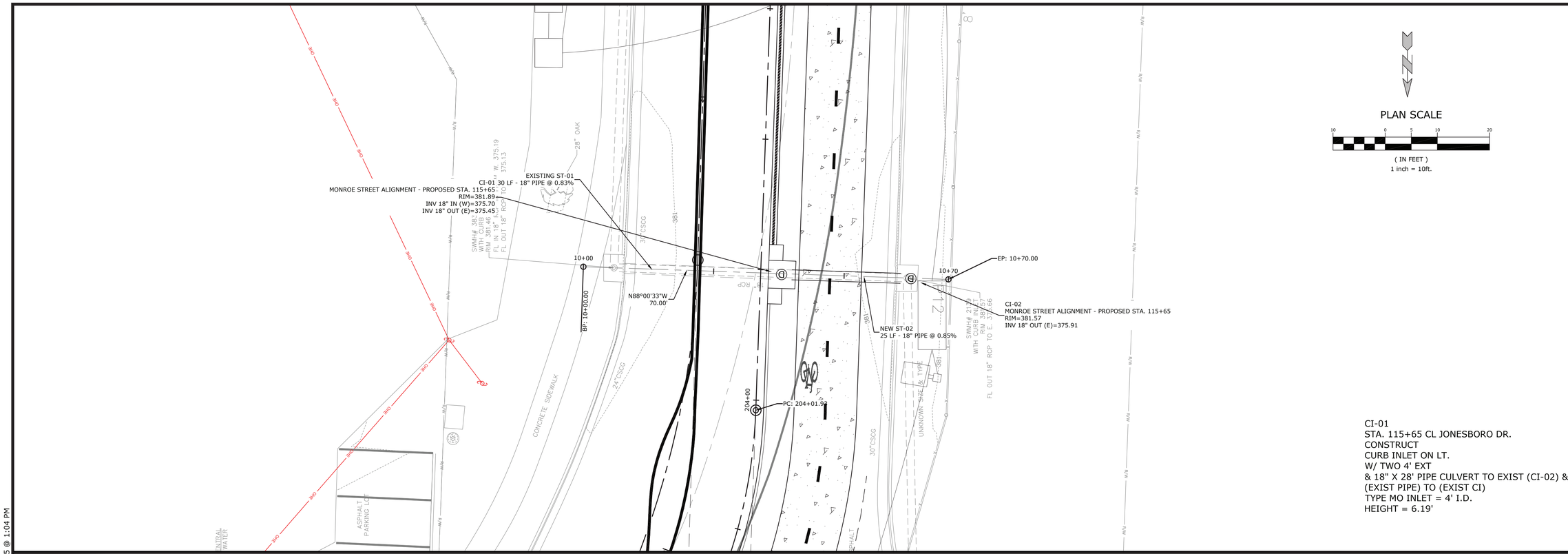

CI-01
STA. 115+65 CL JONESBORO DR.
CONSTRUCT
CURB INLET ON LT.
W/ TWO 4' EXT
& 18" X 28' PIPE CULVERT TO EXIST (CI-02) &
(EXIST PIPE) TO (EXIST CI)
TYPE MO INLET = 4' I.D.
HEIGHT = 6.19'

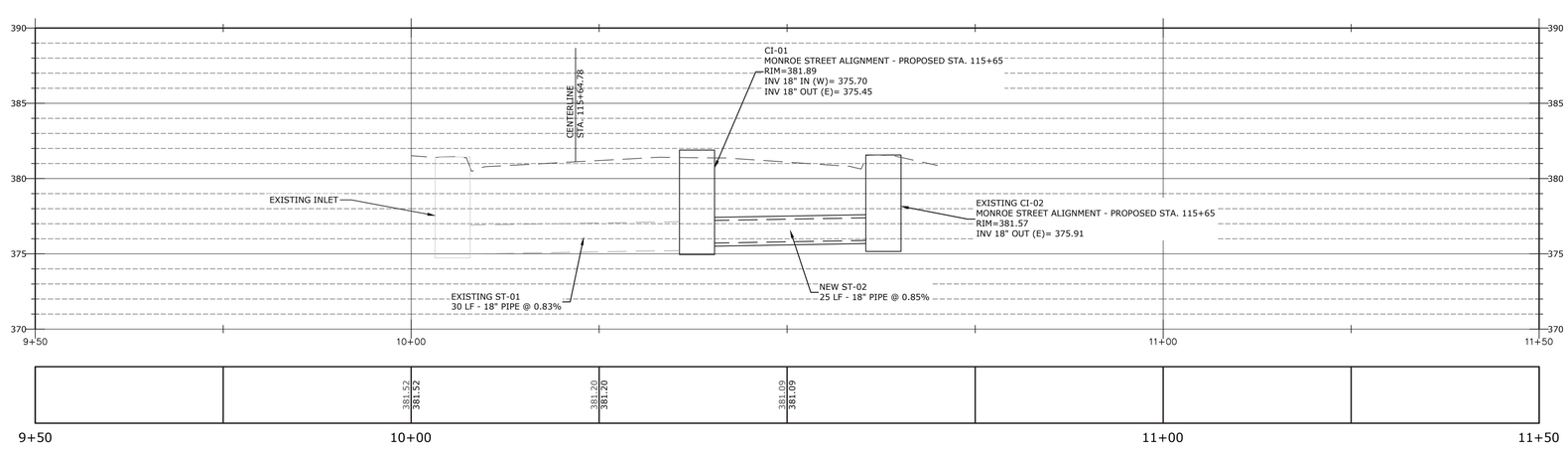

EXISTING DRAINAGE PROFILE

SCALE:
1"= 10' HORIZ.
1"= 5' VERT.

McCLELLAND CONSULTING ENGINEERS, INC.
DESIGNED TO SERVE
7302 KANIS ROAD
LITTLE ROCK, ARKANSAS 72204
PH: (501) 371-0272
HTTP://WWW.MCE.US.COM

STATE OF ARKANSAS
LICENSED PROFESSIONAL ENGINEER
No:18021
TAYLOR CLARK
2-20-25

JOB NO. 061757
JONESBORO DR. CHILDREN'S TRAIL (LITTLE ROCK) (S)
LITTLE ROCK, ARKANSAS

811 Know what's below. Call before you dig.

REVISIONS

REV	DATE	DESCRIPTION

DRAINAGE PLAN & PROFILE

DESIGNED BY:	DRAWN BY:
WTC	WTC
DATE: 1/23/25	REVISION:
SCALE: 1" = 10'	JOB NUMBER: 22-5767

NOTE:
Light poles shall be located at Sta. 113+38.58 and Sta. 113+98.58, 2.67' Left of CL Construction.

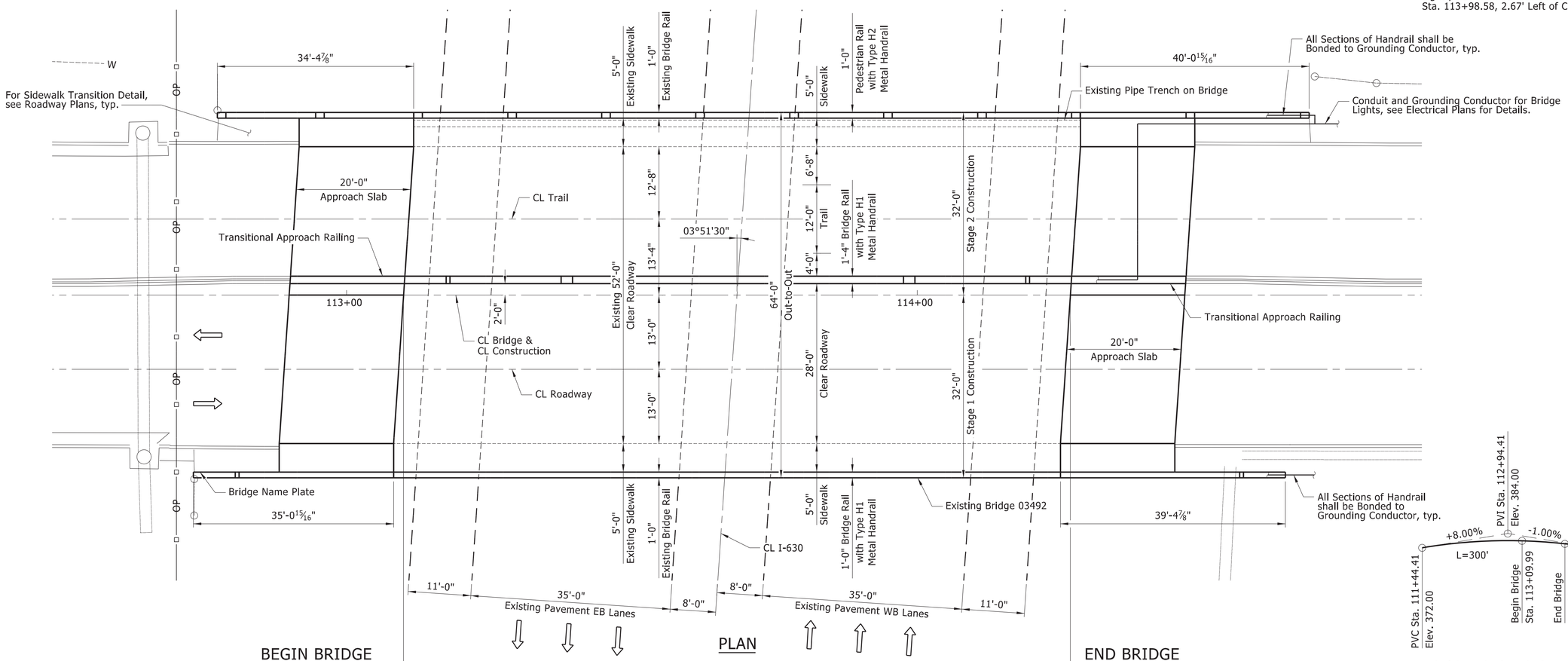

PLAN

ELEVATION

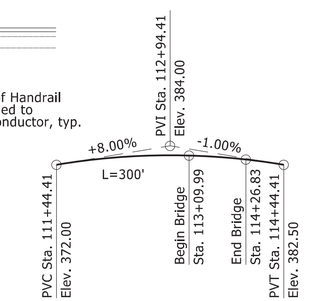

Vertical Curve is along CL Construction.

Vertical Curve Information derived from Existing Plans and shall be verified by the Contractor.

VERTICAL CURVE DATA

No Scale

Burns & McDonnell Engineering Co., Inc.
9400 Ward Parkway
Kansas City, Missouri 64114
816-333-9400
Certificate of Authority No. : 17
BMcD Project No. 149612
BURNS McDONNELL

STATE OF ARKANSAS
LICENSED PROFESSIONAL ENGINEER
No. 17472
RAVIS MICHAEL RAPP
1/22/2025
ORIGINAL SIGNATURE ON FILE

JOB NO. 061757
JONESBORO DR. CHILDREN'S TRAIL
(LITTLE ROCK) (S)

LITTLE ROCK, ARKANSAS

REVISIONS		
NO.	DATE	DESCRIPTION

GENERAL PLAN AND ELEVATION

DRAWN BY: TWM	DATE: 7/2023
CHECKED BY: RMH	DATE: 5/2024
DESIGNED BY: TMR	DATE: 7/2023
ARDOT BRIDGE NO. 03492	
SCALE: 1" = 10'	JOB NUMBER: 061757

BR-02

GENERAL NOTES:

BENCHMARK: Vertical Control Data are shown on the Survey Control Detail Sheets.

CONSTRUCTION SPECIFICATIONS: Arkansas State Highway and Transportation Department Standard Specifications for Highway Construction (2014 edition) with applicable Supplemental Specifications and Special Provisions. Section and Subsection refer to the Standard Construction Specifications unless otherwise noted in the plans.

DESIGN SPECIFICATIONS: AASHTO Standard Specifications for Highway Bridges, 17th Edition (2002).

LIVE LOADING: HS20 DESIGN METHOD: LOAD FACTOR

MATERIALS AND STRENGTHS:

Class S(AE) Concrete (superstructure)	f'c =	4,000 psi
Reinforcing Steel (AASHTO M 31 or M 322, Type A)	fy =	60,000 psi
Structural Steel (ASTM A709, Gr. 36)	Fy =	36,000 psi

POWDER COATING: All metal bridge railing shall receive a powder coating finish. The color of paint shall be Black equal or close to Federal Std. 595B, Color Chip No. 27038 and as approved by the Engineer.

EXPANSION JOINTS: Expansion joints at begin and end bridge shall be rehabilitated. Remove existing preformed expansion joint material and replace with poured silicone joint sealant. Roadway channels and end bent angles shown on standard are not present on the existing bridge but the details are still applicable. See Std. Dwg. No. 55064 for additional information.

TEXTURED COATING FINISH: Class 3 Textured Coating Finish shall be applied to bridge surfaces as specified in the plans and in Special Provision "TEXTURED COATING FINISH" and in accordance with Subsection 802.19(b)(3). Textured Coating Finish shall not be applied on surfaces where Polymer Overlay is applied.

POLYMER OVERLAY: Polymer overlay shall be applied to the roadway, trail and sidewalk surfaces (including vertical face of sidewalk curb) from face of rail to face of rail and from begin bridge to end bridge. For additional information, see Special Provisions "POLYMER OVERLAY" and "BRIDGE DECK REPAIR FOR POLYMER OVERLAYS".

DETAIL DRAWINGS:	DRAWING NO(S).
Stage Construction	BR-04 - BR-05
Bridge Rail Details	BR-06 - BR-10
Metal Handrail Details	BR-11 - BR-12
Approach Slab Details	BR-13 - BR-14
Electrical Details	BR-15
Standard Details for Joint Repairs & Modification	55064

EXISTING BRIDGE: The Existing Bridge No. 03492 is 64.0' wide (52.0' clear roadway) and 116.8' long and consists of two 58'-5" reinforced concrete slab rigid frame spans supported by reinforced concrete walls with spread footings. Plans of the existing structure, if available, may be obtained upon request to the Construction Contract Development Section of the Program Management Division.

REMODELING OF THE EXISTING BRIDGE: The proposed work consists of a polymer overlay, textured coating finish, expansion joint rehabilitation, adding a concrete median bridge rail, replacing the approach slabs, and modifying the existing bridge rails as shown in the plans. For additional requirements of conducting the work, see Section 821. The cost associated with the removal and disposal of portions of the existing bridge and approach slabs shall be included in the pay item "MODIFICATION OF EXISTING BRIDGE STRUCTURE (BRIDGE NO. 03492)".

VERIFICATION: Except as noted, components of the existing bridge are to be retained and joined to the proposed work. Information and dimensions shown are based on the existing bridge plans and available survey data. The Contractor is to adhere strictly to the requirements for verification of the geometry of the existing bridge and its relationship to the proposed work described in Subsection 821.02 and make necessary adjustments to fit the proposed work to the existing structure. Payment for this work shall be considered subsidiary to the pay item "MODIFICATION OF EXISTING BRIDGE STRUCTURE (BRIDGE NO. 03492)".

REMOVAL AND SALVAGE: All material removed from the existing bridge under Item 821 shall be disposed of in accordance with Section 205. All material removed from the existing bridge shall become the property of the Contractor.

MAINTENANCE OF TRAFFIC: See Roadway Plans.

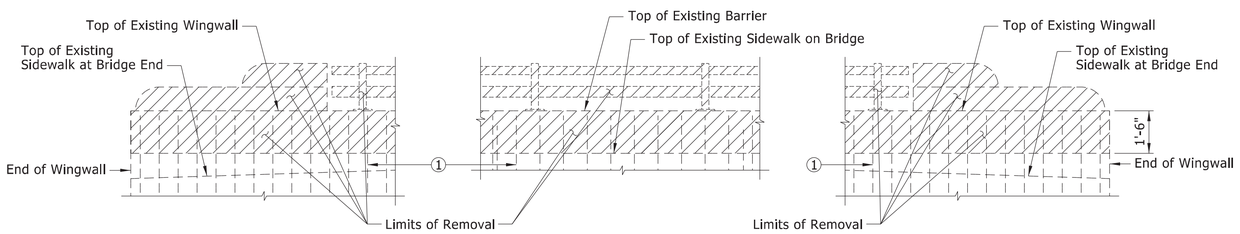

BARRIER REMOVAL DETAILS

Looking at inside Face of Existing Barrier
Scale: ½" = 1'-0"

① Existing Vertical Reinforcing Steel to Remain. On West side, cut as shown in "SECTION A-A" and "SECTION B-B" on Dwg. No. BR-09. On East side, cut and bend as shown in "SECTION A-A" on Dwg. No. BR-06.

Burns & McDonnell Engineering Co., Inc.
9400 Ward Parkway
Kansas City, Missouri 64114
816-333-9400
BURNS McDONNELL
Certificate of Authority No. : 17
BMcD Project No. 149612

STATE OF ARKANSAS LICENSED PROFESSIONAL ENGINEER No. 17472 TRAVIS MICHAEL RAPP
1/22/2025
ORIGINAL SIGNATURE ON FILE

JOB NO. 061757
JONESBORO DR. CHILDREN'S TRAIL (LITTLE ROCK) (S)
LITTLE ROCK, ARKANSAS

REVISIONS		
NO.	DATE	DESCRIPTION

GENERAL NOTES

DRAWN BY: TWM	DATE: 7/2023
CHECKED BY: RMH	DATE: 5/2024
DESIGNED BY: TMR	DATE: 7/2023
ARDOT BRIDGE NO. 03492	
SCALE: NONE	JOB NUMBER: 061757

BR-03

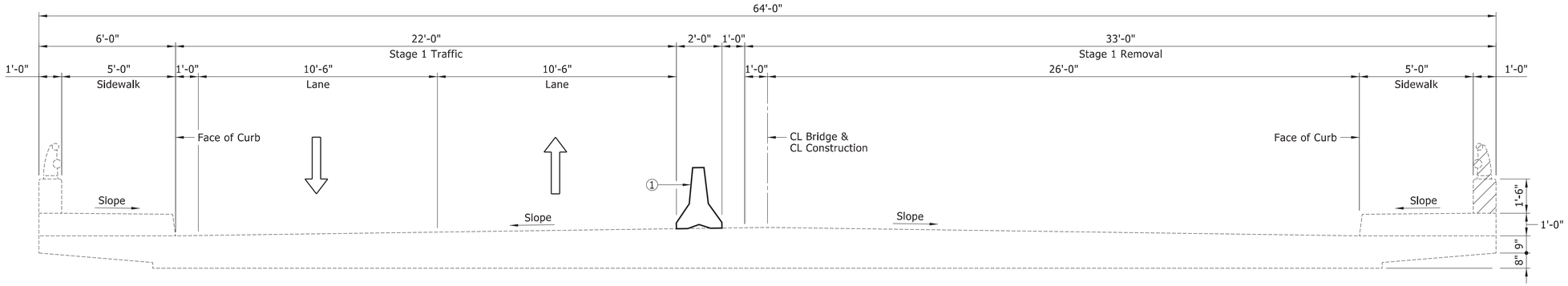

STAGE 1 REMOVAL & TRAFFIC

Looking Ahead Station

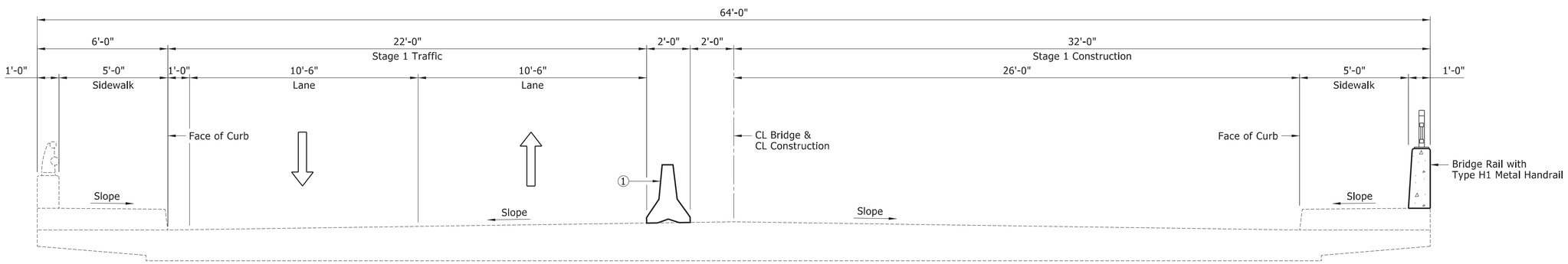

STAGE 1 CONSTRUCTION

Looking Ahead Station

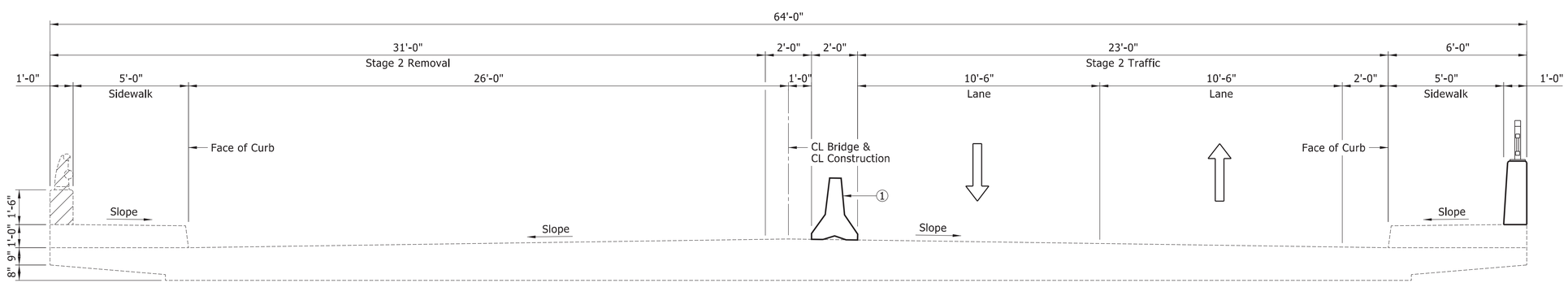

STAGE 2 REMOVAL & TRAFFIC

Looking Ahead Station

NOTES:
Details related to Maintenance of Traffic on bridge plans for information only. For Maintenance of Traffic, see Roadway Plans.

Details which relate to Existing Bridge 03492 are shown for information only. Actual field conditions may vary and shall be verified by the Contractor.

① Temporary Precast Barrier, see Std. Dwg. No. TC-4.

Burns & McDonnell Engineering Co., Inc.
9400 Ward Parkway
Kansas City, Missouri 64114
816-333-9400
Certificate of Authority No.: 17
BMcD Project No. 149612

STATE OF ARKANSAS
LICENSED PROFESSIONAL ENGINEER
No. 17472
TRAVIS MICHAEL RAPP
1/22/2025
ORIGINAL SIGNATURE ON FILE

JOB NO. 061757
JONESBORO DR. CHILDREN'S TRAIL
(LITTLE ROCK) (S)

LITTLE ROCK, ARKANSAS

REVISIONS

NO.	DATE	DESCRIPTION

STAGE CONSTRUCTION (SHEET 1 OF 2)

DRAWN BY: TWM	DATE: 4/2024
CHECKED BY: RMH	DATE: 5/2024
DESIGNED BY: JGS	DATE: 4/2024
ARDOT BRIDGE NO. 03492	
SCALE: 3/8" = 1'-0"	JOB NUMBER: 061757

BR-04

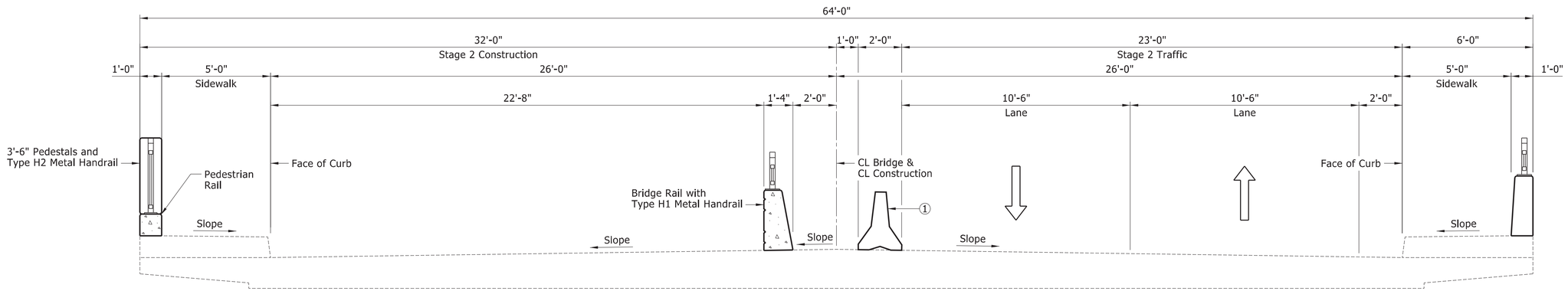

STAGE 2 CONSTRUCTION

Looking Ahead Station

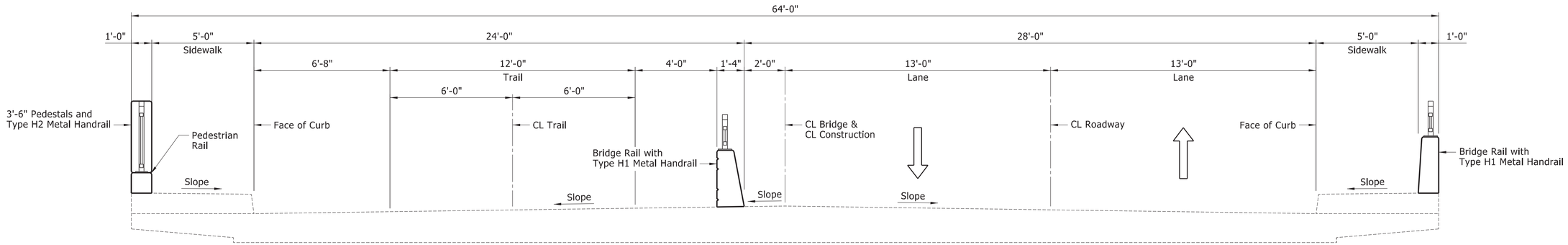

COMPLETED SECTION

Looking Ahead Station

NOTES:
Details related to Maintenance of Traffic on bridge plans for information only. For Maintenance of Traffic, see Roadway Plans.

Details which relate to Existing Bridge 03492 are shown for information only. Actual field conditions may vary and shall be verified by the Contractor.

1 Temporary Precast Barrier, see Std. Dwg. No. TC-4.

Burns & McDonnell Engineering Co., Inc.
9400 Ward Parkway
Kansas City, Missouri 64114
816-333-9400
Certificate of Authority No. : 17
BMcD Project No. 149612

STATE OF ARKANSAS LICENSED PROFESSIONAL ENGINEER No. 17472 TRAVIS MICHAEL RAPP
1/22/2025
ORIGINAL SIGNATURE ON FILE

JOB NO. 061757
JONESBORO DR. CHILDREN'S TRAIL
(LITTLE ROCK) (S)

LITTLE ROCK, ARKANSAS

REVISIONS		
NO.	DATE	DESCRIPTION

STAGE CONSTRUCTION (SHEET 2 OF 2)

DRAWN BY: TWM	DATE: 4/2024
CHECKED BY: RMH	DATE: 5/2024
DESIGNED BY: JGS	DATE: 4/2024
ARDOT BRIDGE NO. 03492	
SCALE: 3/8" = 1'-0"	JOB NUMBER: 061757

BR-05

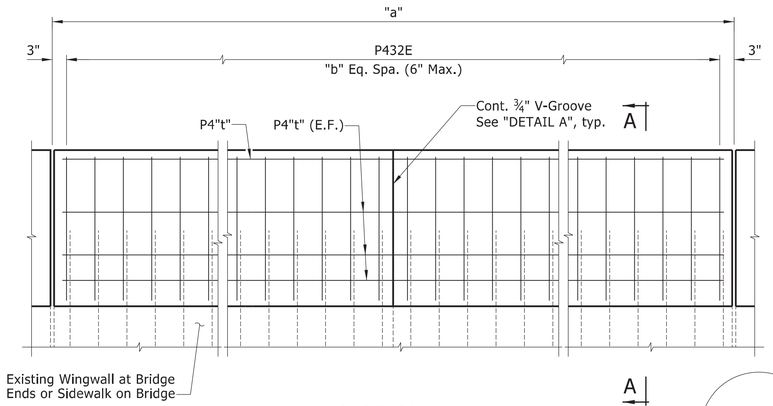

TYPICAL CLOSED BRIDGE RAIL ELEVATION

Looking at Front Face
Handrail not shown for clarity
Scale: ¾" = 1'-0"

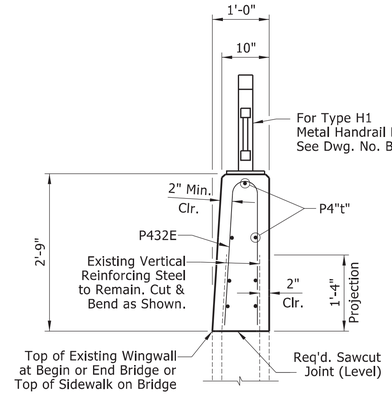

SECTION A-A

Section at Existing Wingwall Shown,
Section on Bridge Similar
Looking Back Station
Scale: ¾" = 1'-0"

NOTE:
East bridge rail does not receive a stone pattern form liner.

BAR LIST

MARK	NO. REQ'D.	LENGTH	"A"	P.D.
P405E	4	7'-11"		3"
P406E	14	6'-1"		2"
P407E TO P415E	2 Each	4'-7" TO 2'-9"	2'-1" TO 1'-2"	2"
P416E	4	2'-8"		Str.
P417E	4	4'-7"		Str.
P418E	4	6'-7"		Str.
P430E	28	31'-1"		Str.
P432E	384	5'-4"		5¼"
P433E	7	34'-8"		Str.
P434E	7	39'-0"		Str.

BENDING DIAGRAMS

Bar dimensions are out-to-out. Bars with an "E" suffix are to be epoxy coated.
The first bar designation number indicates the reinforcing bar size.

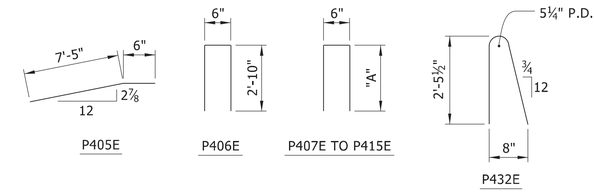

TABLE OF BRIDGE RAIL VARIABLES

	PANEL LENGTH "a"	BAR "t"	SPACES "b"	NUMBER OF PANELS
①	39'-4⅞"	34E	78	1
②	116'-10"	30E	233	1
③	35'-0 15/16"	33E	70	1

① From End of NE Wingwall to CL 1" Poured Silicone Joint at Bent 3

② From CL 1" Poured Silicone Joint at Bent 3 to CL 1" Poured Silicone Joint at Bent 1

③ From CL 1" Poured Silicone Joint at Bent 1 to End of SE Wingwall

EXISTING 3/4" V-GROOVE JOINT LAYOUT ④

LOCATION	DISTANCE BETWEEN (FT.)
End of NE Wingwall to Joint 1	26.00
Joint 1 to Joint 2 ⑤	13.41
⑤ Joint 2 to Joint 3	7.04
Joint 3 to Joint 4	6.90
Joint 4 to Joint 5	7.64
Joint 5 to Joint 6	7.58
Joint 6 to Joint 7	8.67
Joint 7 to Joint 8	8.58
Joint 8 to Joint 9	5.96
Joint 9 to Joint 10	6.04
Joint 10 to Joint 11	5.96
Joint 11 to Joint 12	5.88
Joint 12 to Joint 13	8.63
Joint 13 to Joint 14	8.71
Joint 14 to Joint 15	7.54
Joint 15 to Joint 16	7.42
Joint 16 to Joint 17	7.13
Joint 17 to Joint 18 ⑥	7.15
⑥ Joint 18 to Joint 19	15.08
Joint 19 to End of SE Wingwall	20.00

④ Contractor shall field verify all measurements prior to Construction
⑤ Joint 2 shall be a 1" Poured Silicone Joint at End Bridge
⑥ Joint 18 shall be a 1" Poured Silicone Joint at Begin Bridge

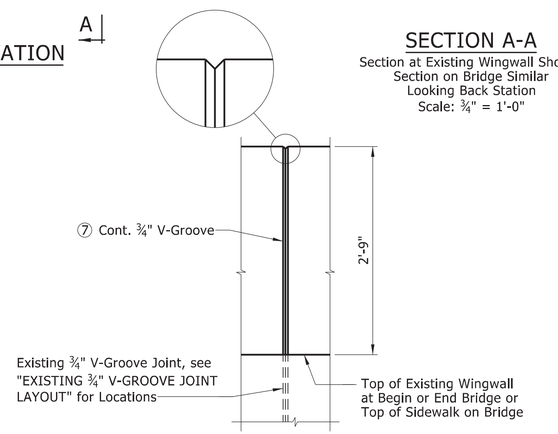

DETAIL A

Scale: ¾" = 1'-0"

⑦ NOTE:
¾" V-Groove shall be continuous on inside face, top, & outside face of bridge rail. V-Groove joints shall be placed to match existing joint locations in wingwall or sidewalk (on bridge).

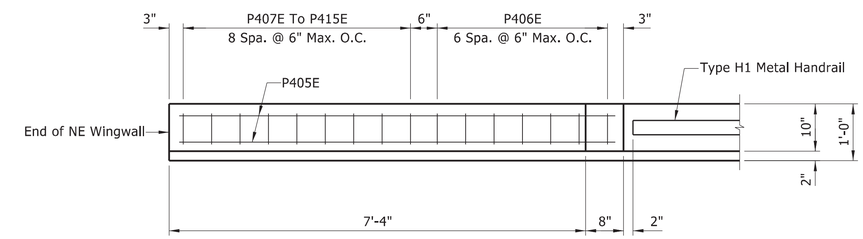

PLAN - EAST BRIDGE RAIL TRANSITION

Transition at End Bridge Shown, Transition at Begin Bridge Similar
Scale: ¾" = 1'-0"

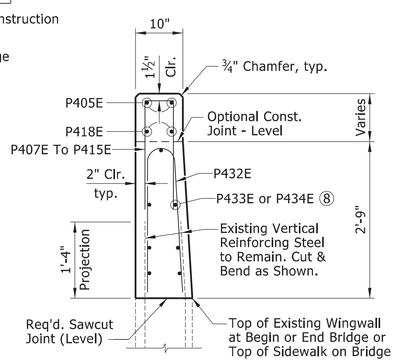

SECTION B-B

Looking Back Station
Scale: ¾" = 1'-0"

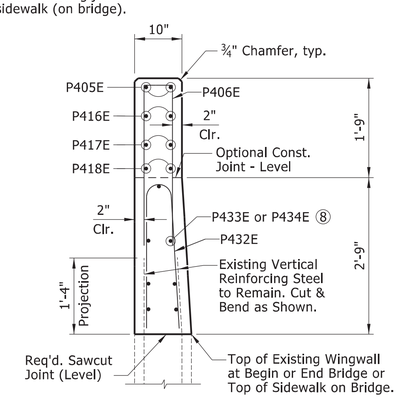

SECTION C-C

Looking Back Station
Scale: ¾" = 1'-0"

⑧ Place P433E at SE Wingwall and P434E at NE Wingwall

NOTES:
Stirrup bars in bridge rail transition shall be spaced with P432E bars.

For surface treatment, see "EAST BRIDGE RAIL SECTION" on Dwg. No. BR-10.

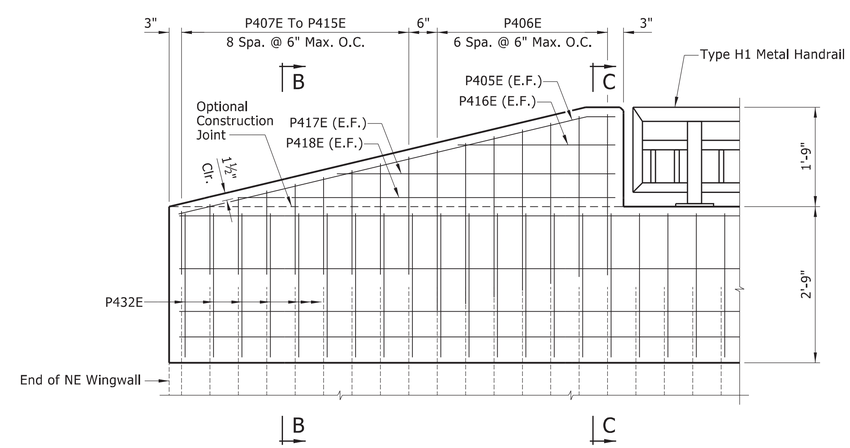

ELEVATION - EAST BRIDGE RAIL TRANSITION

Transition at End Bridge Shown, Transition at Begin Bridge Similar
Looking at Front Face
Scale: ¾" = 1'-0"

Burns & McDonnell Engineering Co., Inc.
9400 Ward Parkway
Kansas City, Missouri 64114
816-333-9400
Certificate of Authority
No. : 17
BMcD Project No. 149612

STATE OF ARKANSAS
LICENSED PROFESSIONAL ENGINEER
No. 17472
RYAN MICHAEL RAPP
1/22/2025
ORIGINAL SIGNATURE ON FILE

JOB NO. 061757
JONESBORO DR. CHILDREN'S TRAIL
(LITTLE ROCK) (S)
LITTLE ROCK, ARKANSAS

REVISIONS		
NO.	DATE	DESCRIPTION

EAST
BRIDGE RAIL
DETAILS

DRAWN BY: TLW	DATE: 3/2024
CHECKED BY: RMH	DATE: 5/2024
DESIGNED BY: JGS	DATE: 3/2024
ARDOT BRIDGE NO. 03492	
SCALE: AS SHOWN	JOB NUMBER: 061757

BR-06

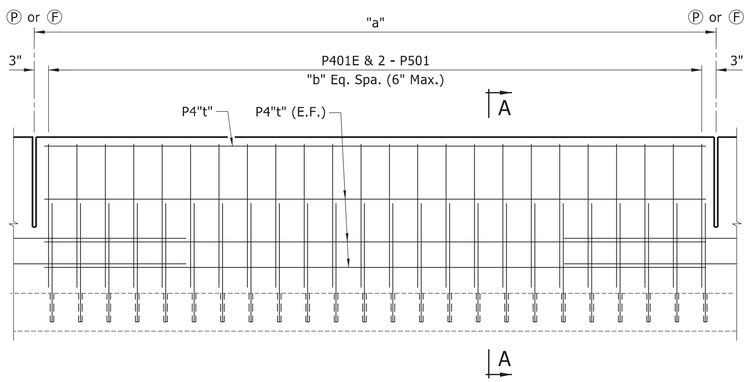

TYPICAL CLOSED BRIDGE RAIL ELEVATION

Looking at Front Face
Handrail not shown for clarity
Scale: ¾" = 1'-0"

Ⓟ CL Partial-Depth Bridge Rail Joint (¼" to 1" Max.). Stop 1'-2" from top of slab.

Ⓕ CL Full-Depth Bridge Rail Joint (¼" to 1" Max.). Stop 4" from top of slab.

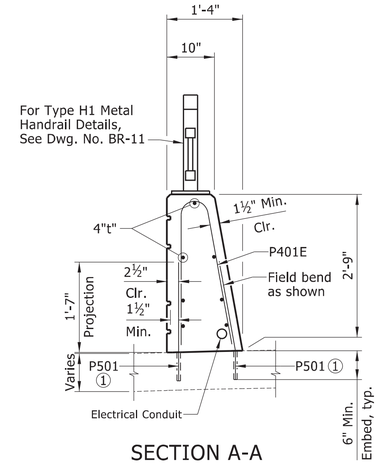

SECTION A-A

Scale: ¾" = 1'-0"

① Drill and grout P501 bars with an approved epoxy anchor system listed on the QPL. Hole diameter and installation procedure shall be as recommended by the Manufacturer. This work and materials shall be considered subsidiary to the item "REINFORCING STEEL - BRIDGE (GRADE 60)" and will not be paid for directly.

NOTES:
Stirrup bars in bridge rail transition shall be spaced with P401E bars.

BAR LIST

MARK	NO. REQ'D.	LENGTH	"A"	P.D.
P401E	234	5'-4"		5¾"
P402E	16	5'-8"		Str.
P403E	14	10'-1"		Str.
P404E	56	11'-8"		Str.
P405E	4	7'-11"		3"
P406E	14	6'-1"		2"
P407E TO P415E	2 Each	4'-7" TO 2'-9"	2'-1" TO 1'-2"	2"
P416E	4	2'-8"		Str.
P417E	4	4'-7"		Str.
P418E	4	6'-7"		Str.
P419E TO P423E	5 Each	4'-0½" TO 4'-3"	9" TO 11½"	2"
P424E	8	9'-2"		2"
P425E	4	6'-8"		2"
P426E	6	5'-7"		2"
P501	468	2'-1"		Str.

BENDING DIAGRAMS

Bar dimensions are out-to-out. Bars with an "E" suffix are to be epoxy coated.
The first bar designation number indicates the reinforcing bar size.

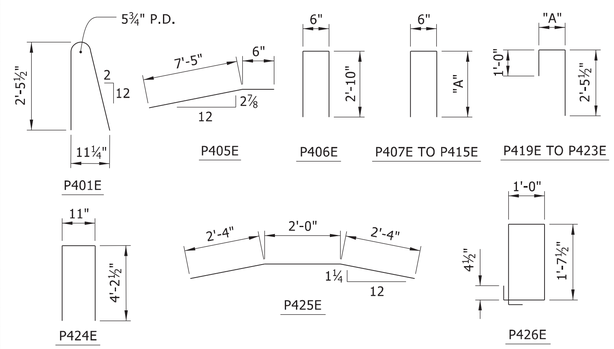

TABLE OF BRIDGE RAIL VARIABLES

PANEL LENGTH "a"	BAR "t"	SPACES "b"	NUMBER OF PANELS
10'-5"	03E	20	2
12'-0"	04E	23	8

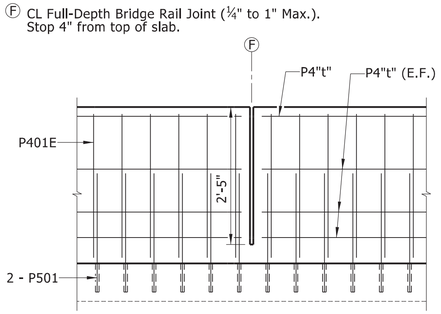

MEDIAN BRIDGE RAIL REINFORCING (FULL DEPTH JOINTS)

Looking at Front Face
Scale: ¾" = 1'-0"

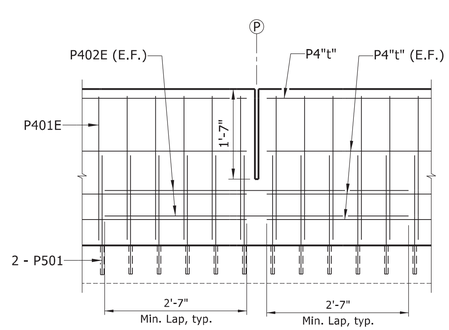

MEDIAN BRIDGE RAIL REINFORCING (PARTIAL DEPTH JOINTS)

Looking at Front Face
Scale: ¾" = 1'-0"

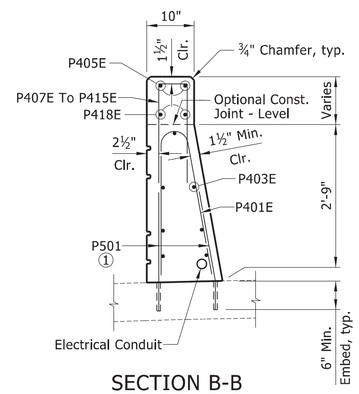

SECTION B-B

Scale: ¾" = 1'-0"

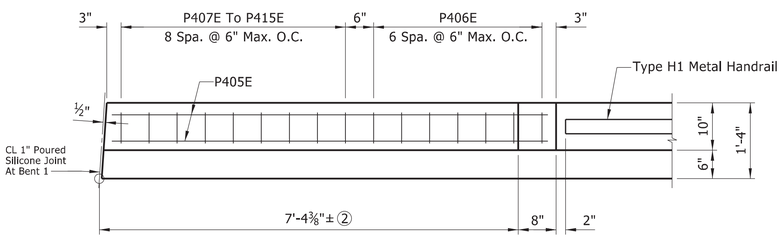

PLAN - MEDIAN BRIDGE RAIL TRANSITION

Transition at Begin Bridge Shown, Transition at End Bridge Similar
Scale: ¾" = 1'-0"

② Measured from CL Joint at Bottom Roadway Face of Median Bridge Rail.

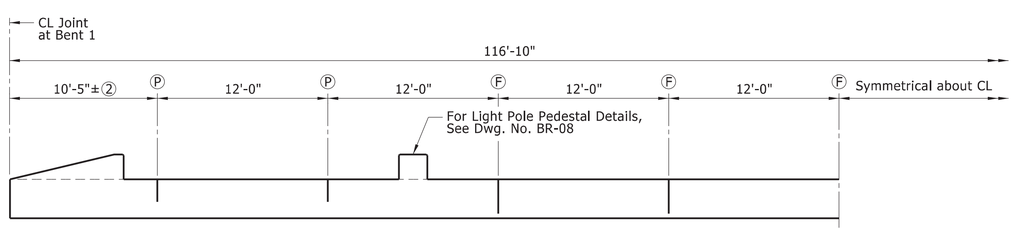

PANEL AND JOINT LAYOUT

Looking at Front Face
Handrail not shown for clarity
Scale: 3/16" = 1'-0"

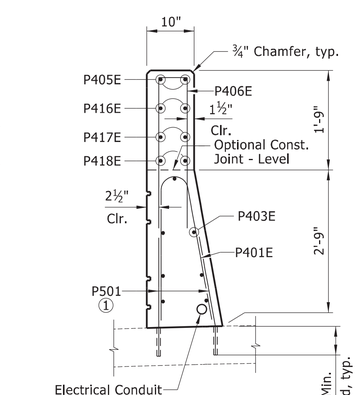

SECTION C-C

Scale: ¾" = 1'-0"

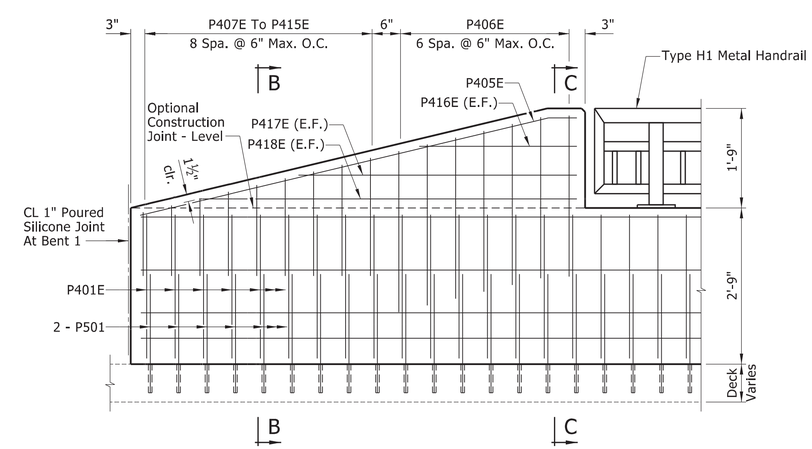

ELEVATION - MEDIAN BRIDGE RAIL TRANSITION

Transition at Begin Bridge Shown, Transition at End Bridge Similar
Scale: ¾" = 1'-0"

Burns & McDonnell Engineering Co., Inc.
9400 Ward Parkway
Kansas City, Missouri 64114
816-333-9400
Certificate of Authority No.: 17
BMcD Project No. 149612
BURNS McDONNELL

STATE OF ARKANSAS
LICENSED PROFESSIONAL ENGINEER
No. 17472
TRAVIS MICHAEL RAPP
1/22/2025
ORIGINAL SIGNATURE ON FILE

JOB NO. 061757
JONESBORO DR. CHILDREN'S TRAIL (LITTLE ROCK) (S)
LITTLE ROCK, ARKANSAS

REVISIONS		
NO.	DATE	DESCRIPTION

MEDIAN BRIDGE RAIL DETAILS

DRAWN BY: TLW	DATE: 3/2024
CHECKED BY: RMH	DATE: 5/2024
DESIGNED BY: JGS	DATE: 3/2024
ARDOT BRIDGE NO. 03492	
SCALE: AS SHOWN	JOB NUMBER: 061757

BR-07

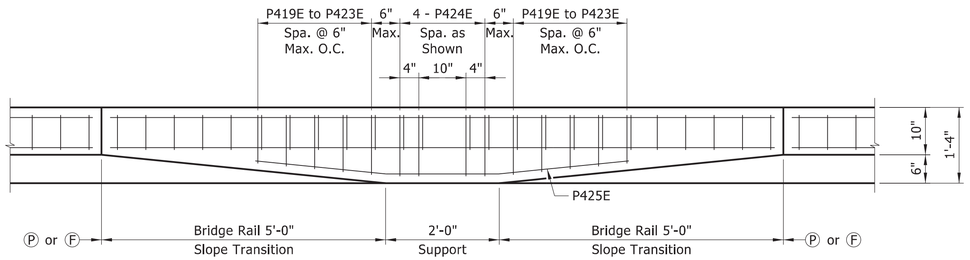

TYPICAL MEDIAN BRIDGE RAIL TRANSITION PLAN

Scale: ¾" = 1'-0"

NOTES:
Median bridge rail shall be widened by increasing top width from 10" to 1'-4" over 5'-0" transition length on each side of light pole support.

For typical median bridge rail reinforcement details, see Dwg. No. BR-07.

For "ARCHITECTURAL FINISH ELEVATION - MEDIAN BRIDGE RAIL" detail, see Dwg. No. BR-10.

For "TYPICAL CLOSED BRIDGE RAIL ELEVATION" detail, see Dwg. No. BR-07.

Ⓟ CL Partial-Depth Rail Joint (¼" to 1" Max.). Stop 1'-2" from top of slab.

Ⓕ CL Full-Depth Rail Joint (¼" to 1" Max.). Stop 4" from top of slab.

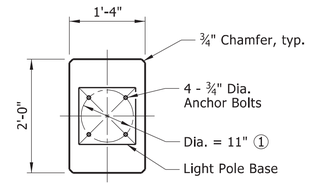

LIGHT POLE SUPPORT PLAN

Scale: ¾" = 1'-0"

① Contractor shall verify the required anchor bolt size and corresponding bolt circle with the light pole manufacturer prior to installing anchor bolts. The light pole base shall not hang over the face of the light pole standard support.

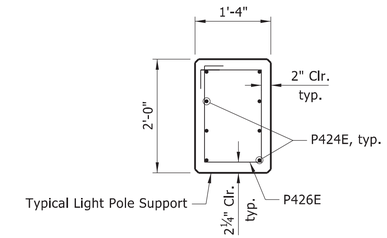

SECTION C-C

Scale: ¾" = 1'-0"

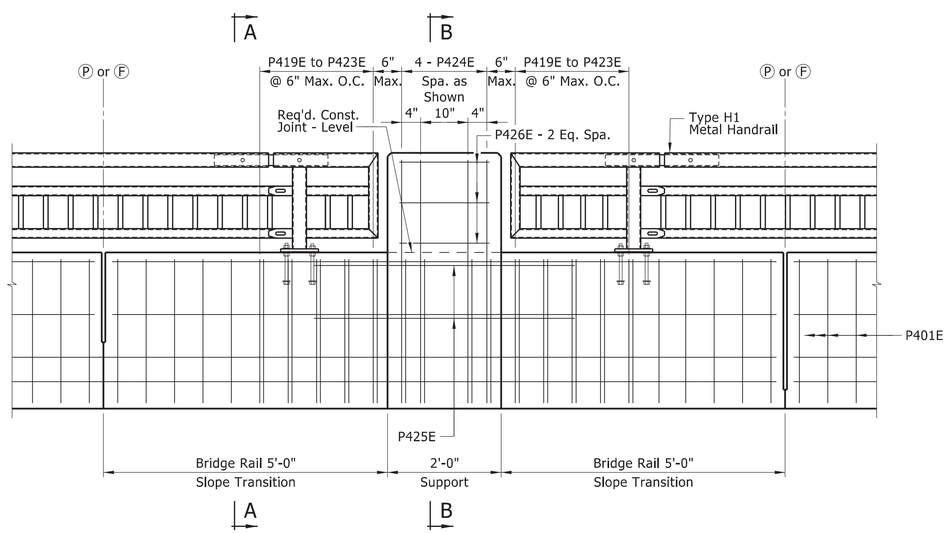

TYPICAL MEDIAN BRIDGE RAIL TRANSITION ELEVATION

Scale: ¾" = 1'-0"

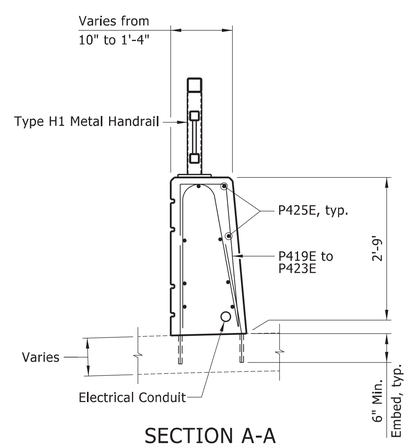

SECTION A-A

Scale: ¾" = 1'-0"

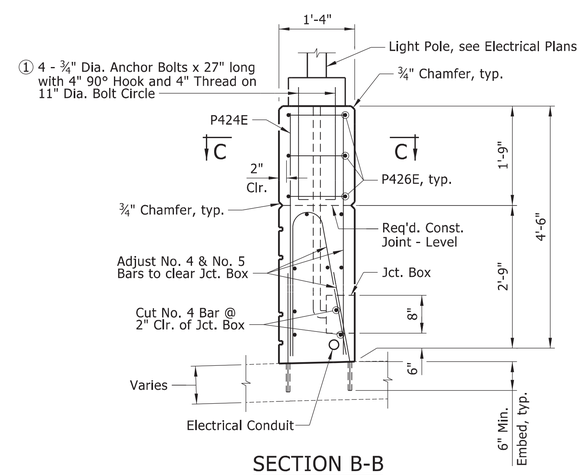

SECTION B-B

Scale: ¾" = 1'-0"

Burns & McDonnell Engineering Co., Inc.
9400 Ward Parkway
Kansas City, Missouri 64114
816-333-9400
Certificate of Authority No. : 17
BMcD Project No. 149612

STATE OF ARKANSAS LICENSED PROFESSIONAL ENGINEER No. 17472 JESSIE MICHAEL RAPP
1/22/2025
ORIGINAL SIGNATURE ON FILE

JOB NO. 061757
JONESBORO DR. CHILDREN'S TRAIL
(LITTLE ROCK) (S)
LITTLE ROCK, ARKANSAS

REVISIONS		
NO.	DATE	DESCRIPTION

LIGHT POLE SUPPORT

DRAWN BY: TLW	DATE: 3/2024
CHECKED BY: RMH	DATE: 5/2024
DESIGNED BY: JGS	DATE: 3/2024
ARDOT BRIDGE NO. 03492	
SCALE: AS SHOWN	JOB NUMBER: 061757

BR-08

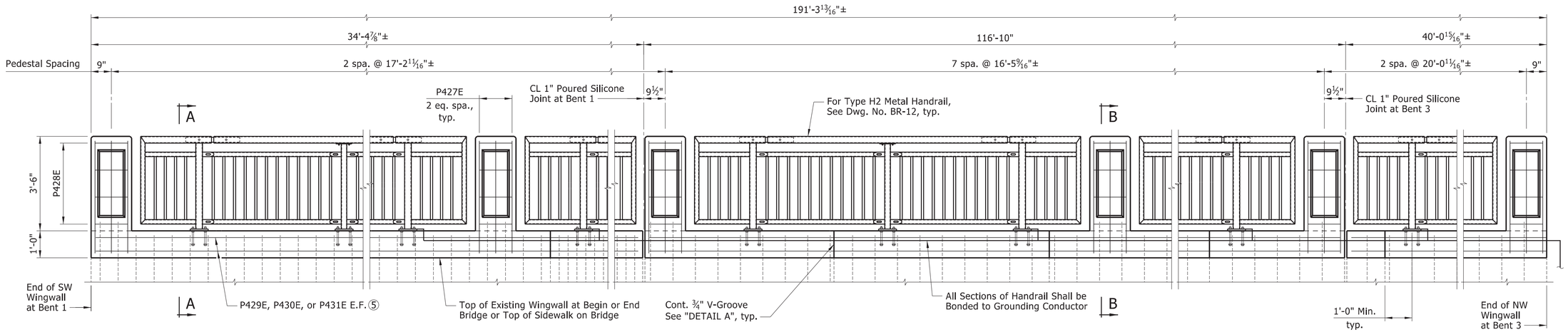

⑤ Place P429E at SW Wingwall, P430E on Bridge (2'-7" Min. Lap), and P431E at NW Wingwall

PEDESTRIAN RAIL ELEVATION

Looking West at Inside Face of Rail
Scale: ½" = 1'-0"

NOTE:
For "PEDESTAL ENHANCEMENT DETAIL", see Dwg. No. BR-10.

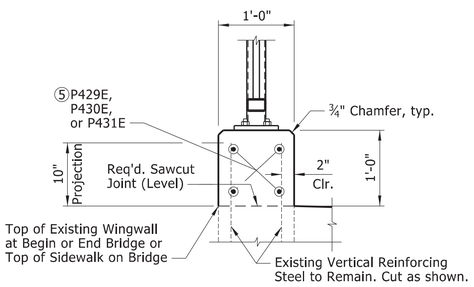

SECTION A-A

Section at SW Wingwall shown,
Section on Bridge & at NW Wingwall Similar
Scale: 1" = 1'-0"

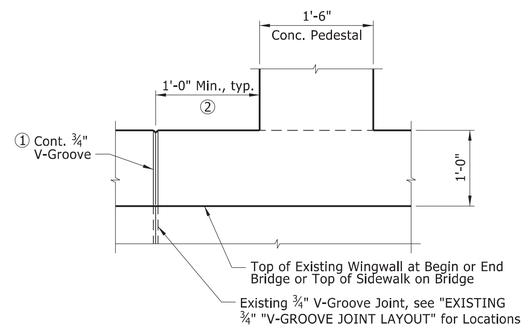

DETAIL A

Scale: 1" = 1'-0"

① NOTE:
¾" V-Groove shall be continous on inside face, top, & outside face of pedestrian rail. V-Groove joints shall be placed to match existing joint locations in wingwall or sidewalk (on bridge).

EXISTING 3/4" V-GROOVE JOINT LAYOUT ②

LOCATION	DISTANCE BETWEEN (FT.)
End of SW Wingwall to Joint 1	20.00
Joint 1 to Joint 2 ③	14.41
③ Joint 2 to Joint 3	7.04
Joint 3 to Joint 4	7.17
Joint 4 to Joint 5	7.46
Joint 5 to Joint 6	7.50
Joint 6 to Joint 7	8.63
Joint 7 to Joint 8	8.67
Joint 8 to Joint 9	5.96
Joint 9 to Joint 10	6.04
Joint 10 to Joint 11	6.00
Joint 11 to Joint 12	6.00
Joint 12 to Joint 13	8.58
Joint 13 to Joint 14	8.58
Joint 14 to Joint 15	7.54
Joint 15 to Joint 16	7.42
Joint 16 to Joint 17	7.21
Joint 17 to Joint 18 ④	7.02
④ Joint 18 to Joint 19	14.08
Joint 19 to End of NW Wingwall	26.00

② Contractor shall field verify all measurements prior to Construction
③ Joint 2 shall be a 1" Poured Silicone Joint at Begin Bridge
④ Joint 18 shall be a 1" Poured Silicone Joint at End Bridge

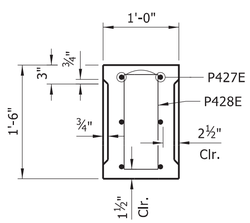

SECTION C-C

Scale: 1" = 1'-0"

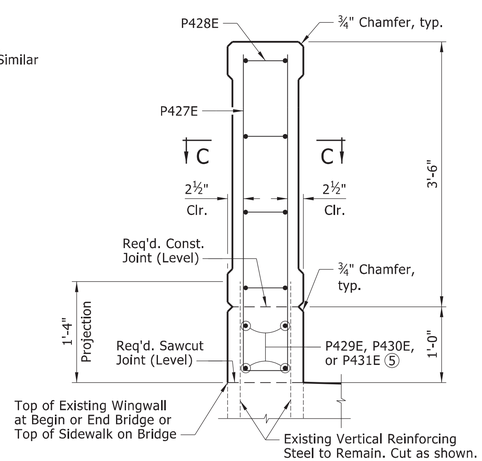

SECTION B-B

Section at Existing Wingwall Shown,
Section on Bridge Similar
Scale: 1" = 1'-0"

BAR LIST

MARK	NO. REQ'D.	LENGTH	P.D.	BENDING DIAGRAMS
P427E	36	8'-9"	2"	Bar dimensions are out-to-out. Bars with an "E" suffix are to be epoxy coated. The first bar designation number indicates the reinforcing bar size.
P428E	48	3'-10"	2"	
P429E	4	34'-0"	Str.	
P430E	16	31'-1"	Str.	
P431E	4	39'-9"	Str.	

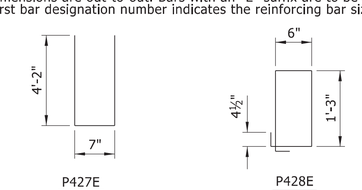

Burns & McDonnell Engineering Co., Inc.
9400 Ward Parkway
Kansas City, Missouri 64114
816-333-9400
Certificate of Authority No. : 17
BMcD Project No. 149612
BURNS McDONNELL

STATE OF ARKANSAS
LICENSED PROFESSIONAL ENGINEER
No. 17472
TRAVIS MICHAEL RAPP
1/22/2025
ORIGINAL SIGNATURE ON FILE

JOB NO. 061757
JONESBORO DR. CHILDREN'S TRAIL (LITTLE ROCK) (S)
LITTLE ROCK, ARKANSAS

REVISIONS		
NO.	DATE	DESCRIPTION

PEDESTRIAN RAIL DETAILS

DRAWN BY: TLW	DATE: 3/2024
CHECKED BY: RMH	DATE: 5/2024
DESIGNED BY: JGS	DATE: 3/2024
ARDOT BRIDGE NO. 03492	
SCALE: AS SHOWN	JOB NUMBER: 061757

BR-09

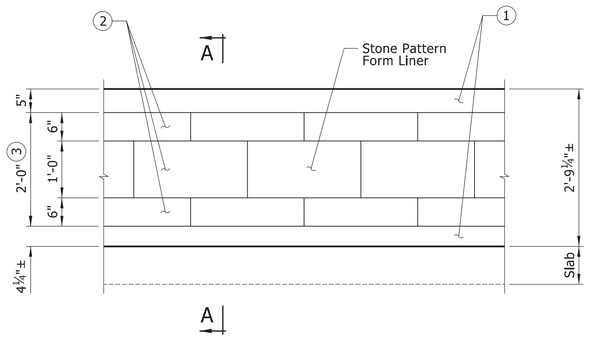

ARCHITECTURAL FINISH ELEVATION - MEDIAN BRIDGE RAIL

Showing Back Face of Barrier
Scale: ¾" = 1'-0"

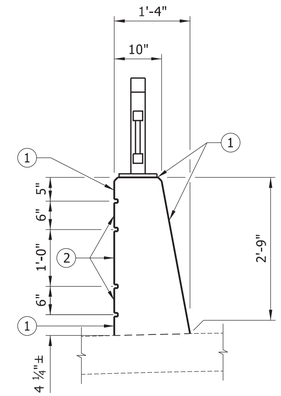

SECTION A-A

Scale: ¾" = 1'-0"

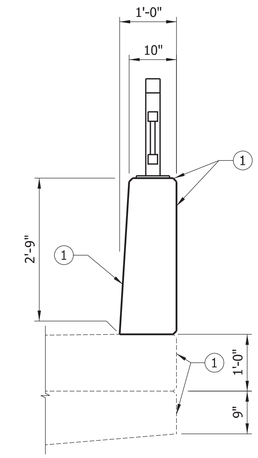

EAST BRIDGE RAIL SECTION

Section on Bridge Shown,
Section at Existing Wingwall Similar
Scale: ¾" = 1'-0"

NOTES:
Form liner shall be a max. depth of 1" to provide a min. clearance of 1½" to bridge rail reinforcing.

A Class 3 Textured Coating Finish shall be applied to bridge rail as specified in Special Provision "TEXTURED COATING FINISH" and in accordance with Subsection 802.19(b)(3).

(1) Class 3 Textured Coating Finish. Contractor shall match the color of the existing bridge.

(2) Class 3 Textured Coating Finish (Color = Brown, Color Chip No. 30219).

(3) Limits of Architectural Finish

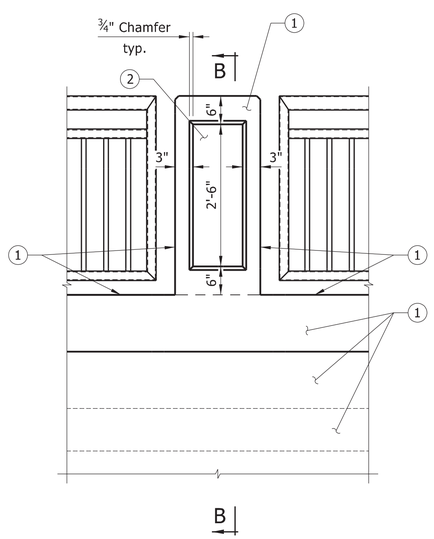

PEDESTAL ENHANCEMENT DETAIL

Scale: ¾" = 1'-0"

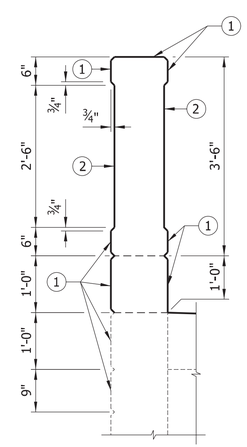

SECTION B-B

Section at Existing Wingwall Shown,
Section on Bridge Similar
Scale: ¾" = 1'-0"

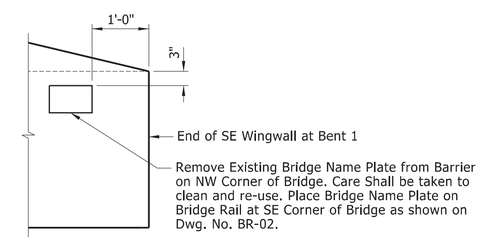

VIEW SHOWING LOCATION OF BRIDGE NAME PLATE

Scale: ¾" = 1'-0"

Burns & McDonnell Engineering Co., Inc.
9400 Ward Parkway
Kansas City, Missouri 64114
816-333-9400
BURNS McDONNELL
Certificate of Authority
No. : 17
BMcD Project No. 149612

STATE OF ARKANSAS
LICENSED PROFESSIONAL ENGINEER
No. 17472
JESSE MICHAEL RAPP
1/22/2025
ORIGINAL SIGNATURE ON FILE

JOB NO. 061757
JONESBORO DR. CHILDREN'S TRAIL
(LITTLE ROCK) (S)

LITTLE ROCK, ARKANSAS

REVISIONS		
NO.	DATE	DESCRIPTION

AESTHETIC DETAILS

DRAWN BY: TLW	DATE: 4/2024
CHECKED BY: RMH	DATE: 5/2024
DESIGNED BY: JGS	DATE: 4/2024
ARDOT BRIDGE NO. 03492	
SCALE: AS SHOWN	JOB NUMBER: 061757

BR-10

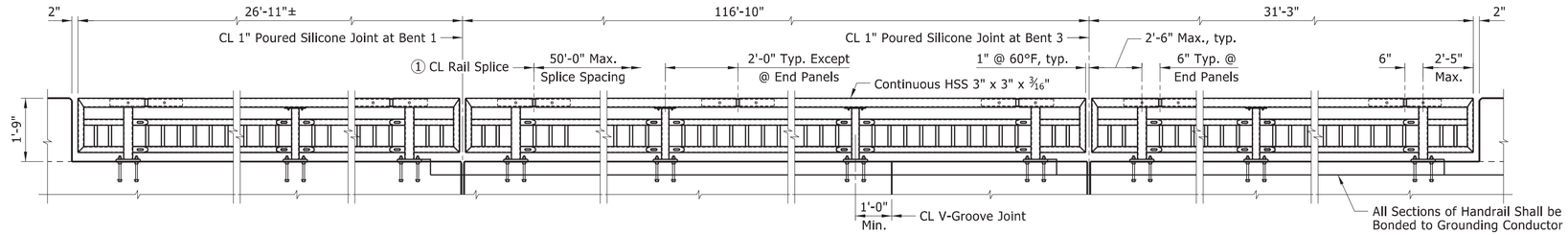

TYPE H1 METAL HANDRAIL ELEVATION AT EAST BRIDGE RAIL

Looking at Back Face
Scale: ½" = 1'-0"

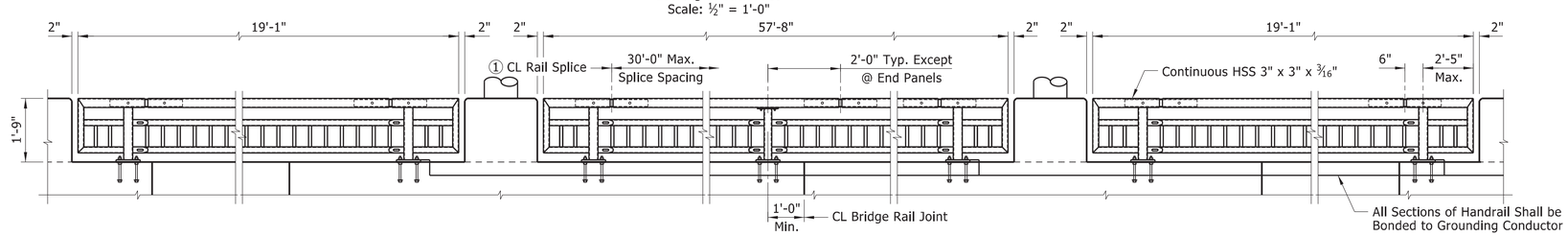

TYPE H1 METAL HANDRAIL ELEVATION AT MEDIAN BRIDGE RAIL

Looking at Front Face
Scale: ½" = 1'-0"

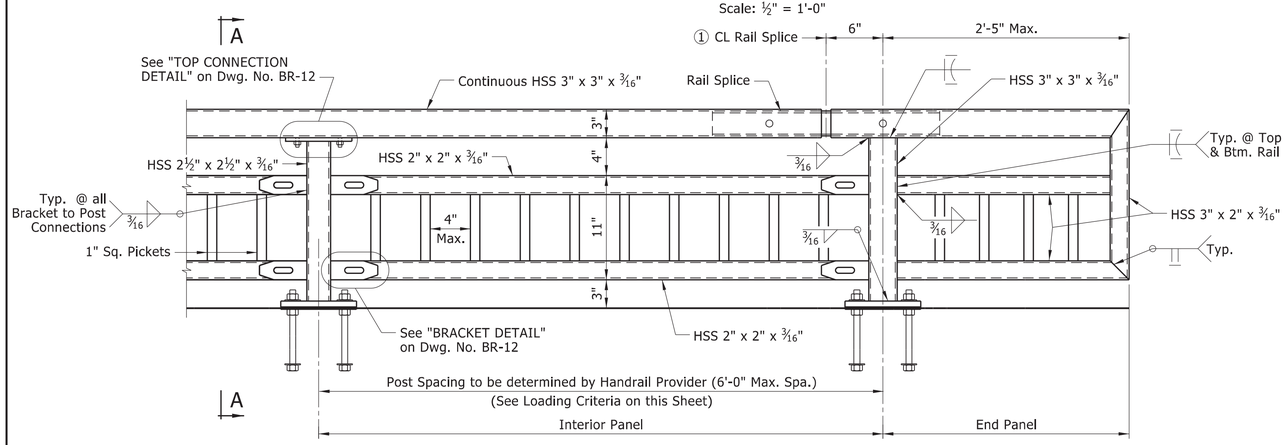

TYPICAL INTERIOR AND END PANELS

Scale: 1½" = 1'-0"

① See Dwg. No. BR-12 for "RAIL SPLICE DETAIL".

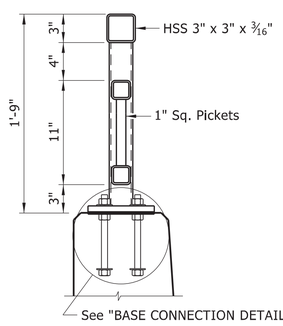

SECTION A-A

Scale: 1½" = 1'-0"

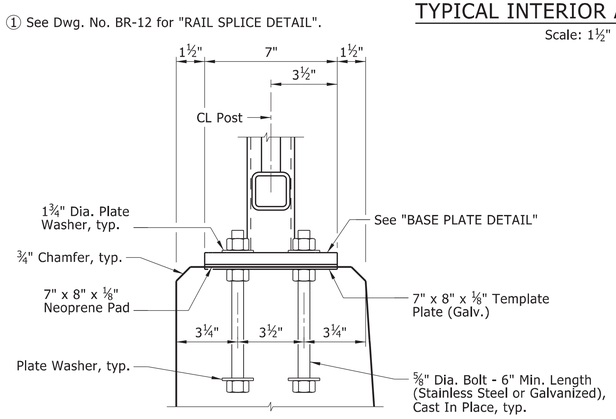

BASE CONNECTION DETAIL

Scale: 3" = 1'-0"

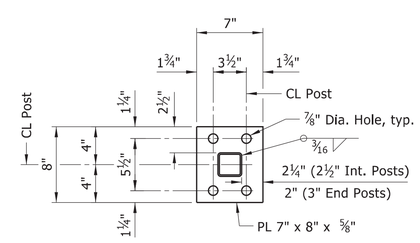

BASE PLATE DETAIL

Scale: 1½" = 1'-0"

② HILTI HIT RE 500 Epoxy Adhesive Anchor System with 4½" embedment or approved equal.

The Epoxy Adhesive Anchor System shall be installed in accordance with Manufacturer's recommendations.

NOTES FOR METAL HANDRAIL:

The metal handrail shall be designed, fabricated, and painted in accordance with Special Provision "METAL HANDRAIL".

The interior panels and posts shall be Aegis II Series manufactured by Ameristar Fence Products, Inc., Tulsa, Oklahoma or approved equal.

Rail layout shall conform to vertical and horizontal alignment of bridge. All posts shall be vertical. Rail sections shall be fabricated to attach to at least three posts.

Base plates shall not be placed upon areas that are improperly finished, deformed or irregular.

Maximum post spacing = 6'-0". Minimum distance from centerline post to centerline open or V-Groove joints in bridge rail = 1'-0".

Rail splices shall be at 50' maximum spacing. Centerline of splices shall be located at a minimum of 2 feet from centerline of post unless noted otherwise.

Shop drawings showing details of the metal handrail, including design calculations and a detailed post spacing layout in relation to the bridge rail joints and light pole pedestals, shall be submitted and approval secured prior to fabrication.

MATERIALS:

Rail tubing, posts, end caps, and base plates shall conform to ASTM A709, Grade 36 or ASTM A500-Grade B, and shall be galvanized after fabrication in accordance with Subsection 806.02(c). Steel rail members shall receive a powder coating process after galvanizing. Galvanized surfaces shall be prepared in accordance with Subsection 807.87 and the Manufacturer's recommendations prior to application of the powder coating process.

The powder coating process shall be a two coat system applied using electrostatic spray. The base coat shall be a thermosetting epoxy powder with a minimum thickness of 2-4 mils. The top coat shall be a tough polyester powder coat with a minimum thickness of 2-4 mils. Color shall be black, equal to or close to Federal Std. 595B, color chip 27038. Coated galvanized framework shall have a salt spray resistance of 3,000 hours using ASTM B117 without loss of adhesion. The powder coating process shall be in accordance with Manufacturer's recommendations. Any damage to the powder coated finish shall be repaired with a compatible touch-up system in accordance with the Manufacturer's recommendations and to the satisfaction of the Engineer at the Contractor's expense.

The Contractor shall submit a paint color sample prior to fabrication for Owner's approval.

Cast-in-place anchor bolts, nuts, washers, and set screws shall be galvanized high-strength steel or stainless steel. Mixing of galvanized and stainless steel fasteners will not be permitted.

High-Strength Steel:
Cast-in-place anchor bolts shall conform to ASTM F3125, Grade A325, Type 1.
Nuts shall conform to ASTM A563, Grade DH or AASHTO M 292, Grade 2H.
Washers shall conform to ASTM F436.
Plate Washers shall conform to ASTM A709, Grade 36.
Template Plates shall conform to ASTM A709, Grade 36.
Splice Set Screws shall conform to ASTM A307, Grade A.
Anchor bolts, nuts, washers, plate washers, and set screws shall be galvanized in accordance with AASHTO M 232, Class C or ASTM B695, Class 50.

Stainless Steel:
Cast-in-place anchor bolts shall conform to ASTM A193, Grade B8, Class 2 or A320, Grade B8, Class 2 with a minimum yield strength of 80,000 psi.
Nuts shall conform to ASTM A194, Grade 8.
Washers shall conform to ASTM A240, Type 302.
Plate Washers shall conform to ASTM A240, Type 302.
Template plates shall conform to ASTM A240, Type 302.
Splice Set Screws shall conform to ASTM A193, Grade B8, Class 1 or A320, Grade B8, Class 1.

Threads on bolts, screws, and nuts shall conform to American Standard Coarse Series, Class 2 FIT, ASA Specification B1.1. Plate washers shall have dimensions meeting the requirements of ANSI/ASME B18.22.1, Type A plain washer (Wide Series) unless otherwise noted. Neoprene pads shall conform to the requirements of Subsection 807.15(b).

Metal handrail, including posts, fasteners, base plates, template plates, balusters, anchor bolts, neoprene pads, galvanizing and powder coatings; fabrication and erection; and all incidentals necessary to complete the work shall be paid for in accordance with Section 806 at the contract unit price per linear foot bid for "TYPE H1 METAL HANDRAIL" or "TYPE H2 METAL HANDRAIL".

LOADING CRITERIA:

1. All horizontal members shall be designed for a uniform loading of 50 pounds per foot applied vertically and horizontally plus a concentrated load of 200 pounds applied in any direction at the top of the horizontal member. All loadings shall be applied simultaneously.
2. All rail posts shall be designed for a transverse load (in kips) equal to 0.20 + 0.050L where L is equal to the post spacing (in feet).
3. The top continuous 3" HSS member shall be fabricated to attach to a minimum of three posts.

Burns & McDonnell Engineering Co., Inc.
9400 Ward Parkway
Kansas City, Missouri 64114
816-333-9400
Certificate of Authority
No. : 17
BMcD Project No. 149612
BURNS McDONNELL

STATE OF ARKANSAS
LICENSED PROFESSIONAL ENGINEER
No. 17472
DAVIS MICHAEL RAPP
1/22/2025
ORIGINAL SIGNATURE ON FILE

JOB NO. 061757
JONESBORO DR. CHILDREN'S TRAIL
(LITTLE ROCK) (S)
LITTLE ROCK, ARKANSAS

REVISIONS		
NO.	DATE	DESCRIPTION

TYPE H1 METAL HANDRAIL DETAILS

DRAWN BY: TLW	DATE: 3/2024
CHECKED BY: RMH	DATE: 5/2024
DESIGNED BY: JGS	DATE: 3/2024
ARDOT BRIDGE NO. 03492	
SCALE: AS SHOWN	JOB NUMBER: 061757

BR-11

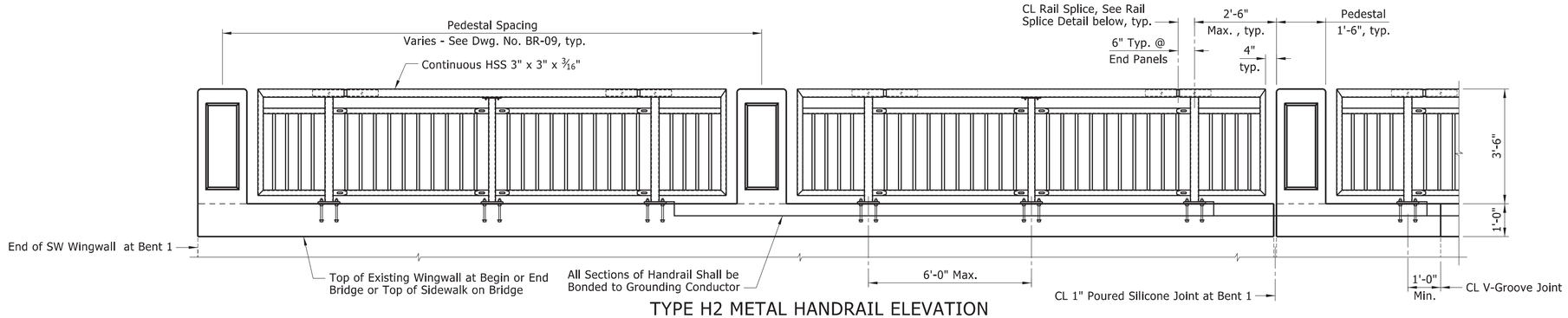

TYPE H2 METAL HANDRAIL ELEVATION

Looking West at Inside Face of Rail
Scale: ½" = 1'-0"

NOTES:
All posts shall be set vertical.

For "DETAILS OF ALTERNATE POST ANCHOR SYSTEM", See Dwg. No. BR-11.

For "NOTES FOR METAL HANDRAIL" and "MATERIALS", See Dwg. No. BR-11.

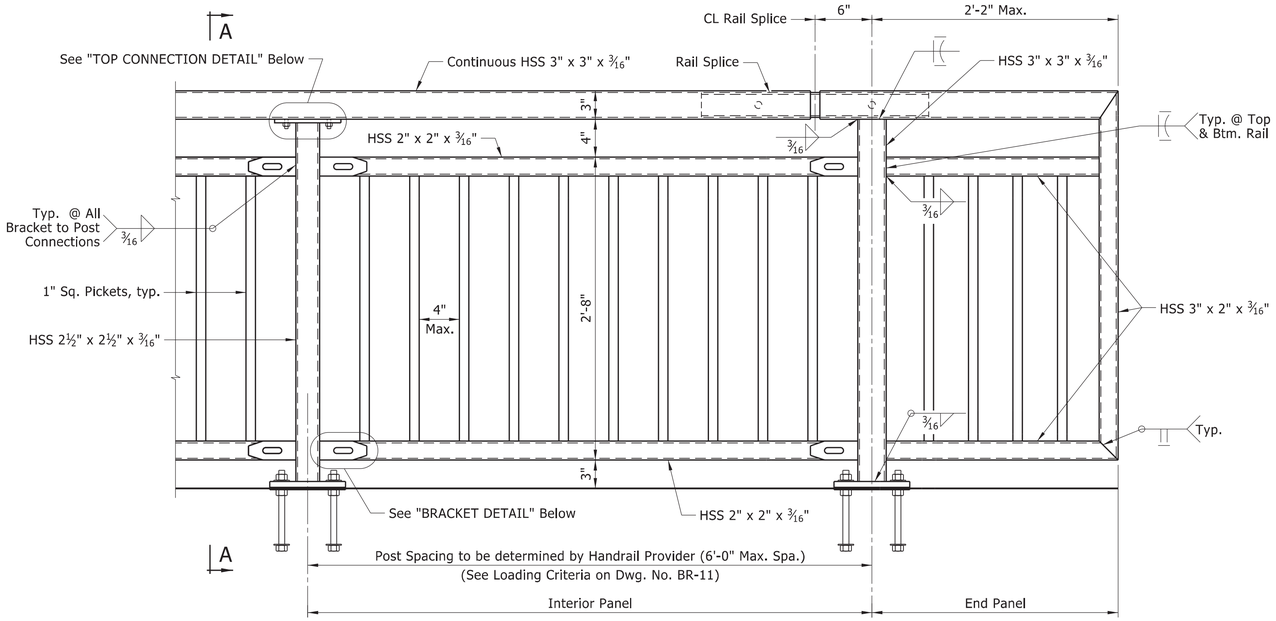

TYPICAL INTERIOR AND END PANELS

Looking West at Inside Face of Rail
Scale: 1½" = 1'-0"

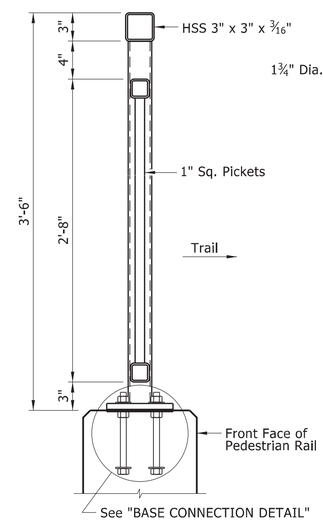

SECTION A-A

Scale: 1½" = 1'-0"

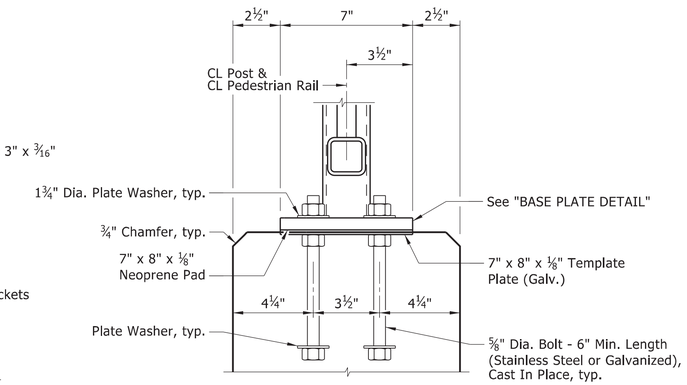

BASE CONNECTION DETAIL

Scale: 1½" = 1'-0"

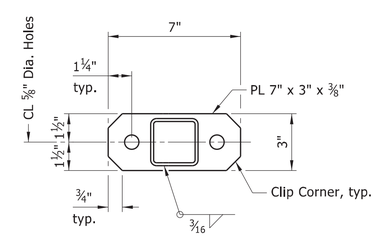

SECTION B-B

Scale: 3" = 1'-0"

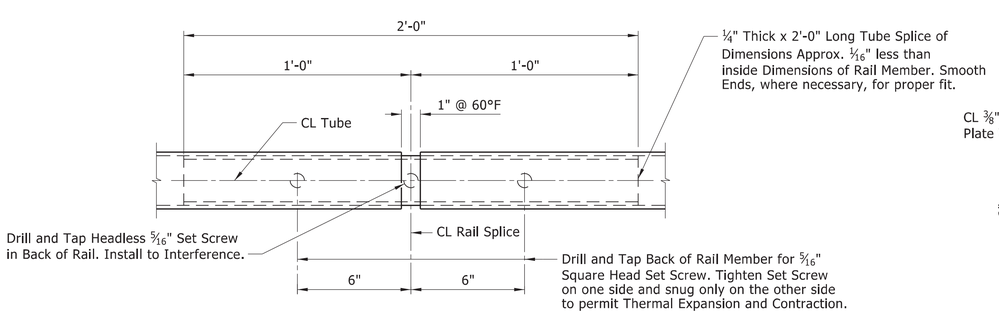

RAIL SPLICE DETAIL

Scale: 3" = 1'-0"

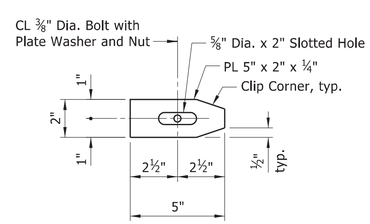

BRACKET DETAIL

Scale: 3" = 1'-0"

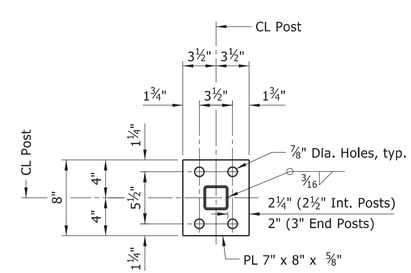

BASE PLATE DETAIL

Scale: 3" = 1'-0"

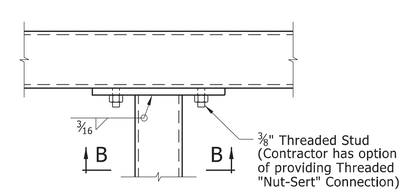

TOP CONNECTION DETAIL

Scale: 3" = 1'-0"

Burns & McDonnell Engineering Co., Inc.
9400 Ward Parkway
Kansas City, Missouri 64114
816-333-9400
Certificate of Authority No. : 17
BMcD Project No. 149612
BURNS McDONNELL

STATE OF ARKANSAS
LICENSED PROFESSIONAL ENGINEER
No. 17472
JESSE MICHAEL RAPP
1/22/2025
ORIGINAL SIGNATURE ON FILE

JOB NO. 061757
JONESBORO DR. CHILDREN'S TRAIL (LITTLE ROCK) (S)
LITTLE ROCK, ARKANSAS

REVISIONS		
NO.	DATE	DESCRIPTION

TYPE H2 METAL HANDRAIL DETAILS

DRAWN BY: TLW	DATE: 3/2024
CHECKED BY: RMH	DATE: 5/2024
DESIGNED BY: JGS	DATE: 3/2024
ARDOT BRIDGE NO. 03492	
SCALE: AS SHOWN	JOB NUMBER: 061757

BR-12

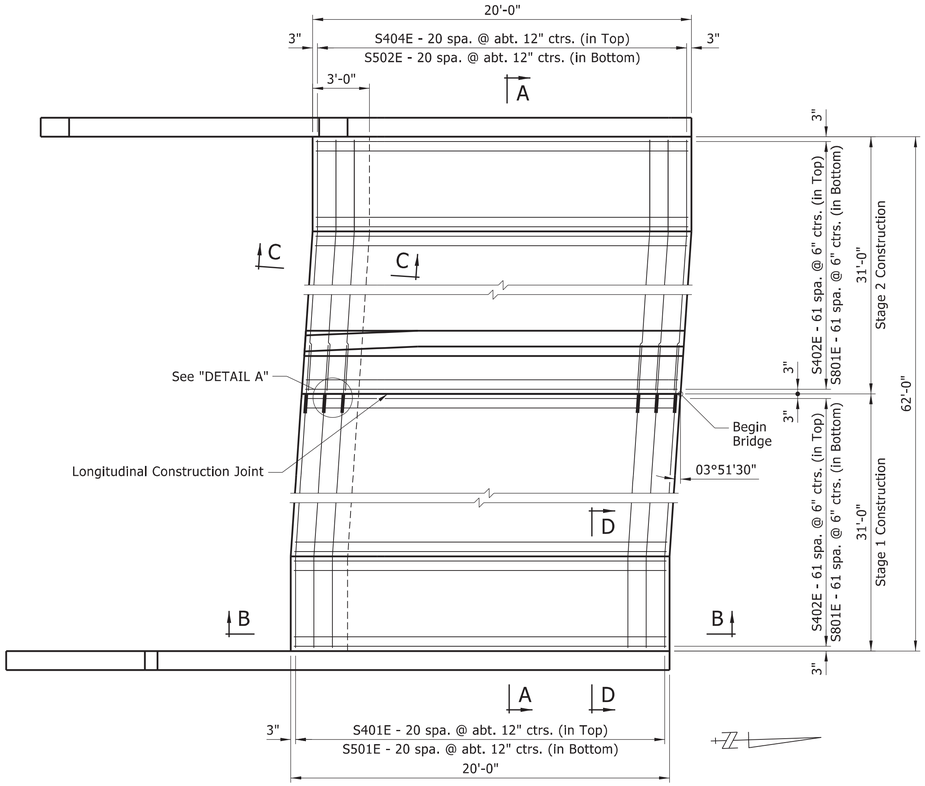

PLAN - APPROACH SLAB AT BEGIN BRIDGE

Scale: ¼" = 1'-0"

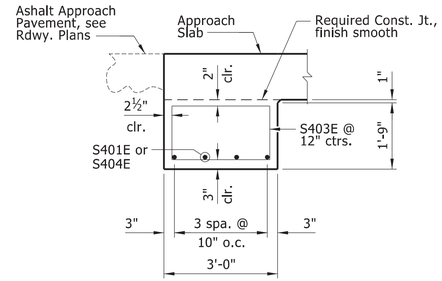

SECTION C-C

Slab reinforcing omitted for clarity

Scale: ½" = 1'-0"

NOTES:

All concrete shall be Class S(AE) with a minimum 28 day compressive strength f'c = 4,000 psi and shall be poured in the dry.

All reinforcing steel shall be Grade 60 (yield strength = 60,000 psi) conforming to AASHTO M 31 or M 322, Type A, mill test reports.

The surface finish for approach slabs, transitional approach rails, and sidewalks shall match that used on the bridge deck.

Approach slabs will be measured and paid for in accordance with Section 504.

All costs for transitional approach rails, sidewalks, approach slabs, end footings, epoxy coated reinforcing steel, sawed joints, preformed joint filler, poured joint sealer, Class 3 textured coating finish, architectural finish, mechanical reinforcing bar splices, and any other incidentals necessary to complete the work shall be considered subsidiary to the unit price bid per cubic yard for "APPROACH SLABS".

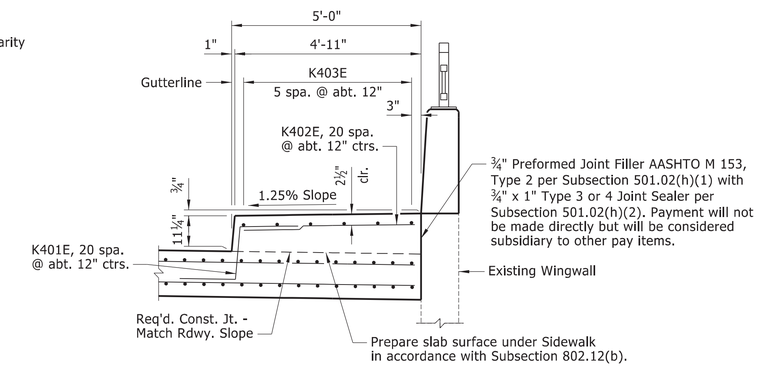

SECTION D-D

Scale: ½" = 1'-0"

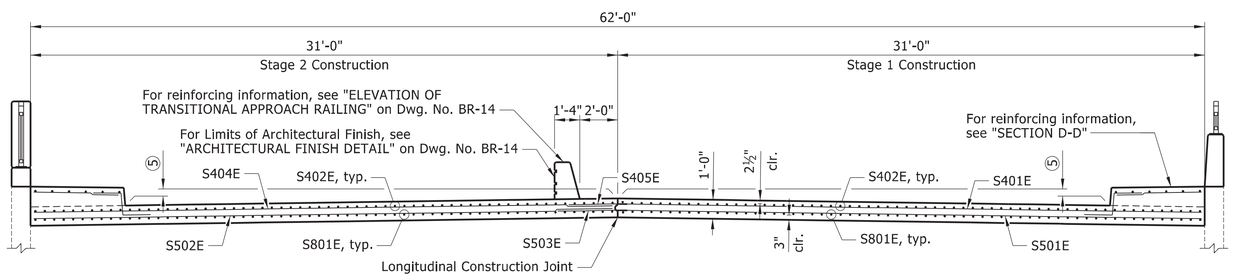

SECTION A-A

Scale: ¼" = 1'-0"

⑤ Match Existing Slope

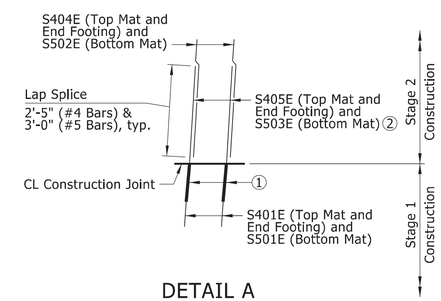

DETAIL A

Scale: ½" = 1'-0"

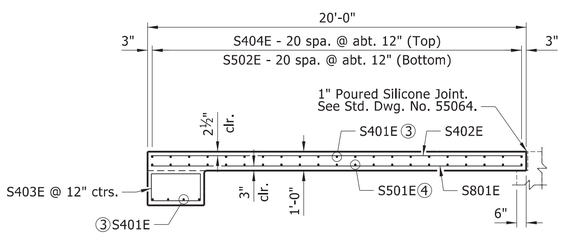

SECTION B-B

Scale: ¼" = 1'-0"

③ S404E for Stage 2 Construction

④ S502E for Stage 2 Construction

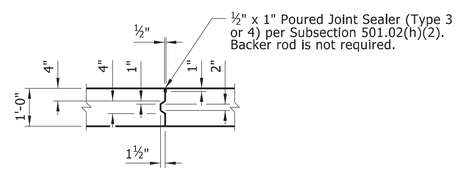

LONGITUDINAL CONSTRUCTION JOINT

Scale: ½" = 1'-0"

NOTE:

The threaded dowel and coupler assembly shall consist of a QPL approved mechanical splice with protective cap and threaded dowel bars as shown and shall develop at least 125% of the yield strength of the dowel bars.

① Install Mechanical Reinforcing Bar Splice (Epoxy Coated) in accordance with Section 804.07. Installation shall follow the Manufacturer's recommendations. Couplers shall be attached to: S401E (Top Mat and End Footing) and S501E (Bottom Mat).

② Splice the following Bars:
S401E with S405E (Top Mat and End Footing, Stage 2 Construction)
S501E with S503E (Bottom Mat, Stage 2 Construction)

Lap the following Bars:
S405E with S404E (Top Mat and End Footing, Stage 2 Construction)
S503E with S502E (Bottom Mat, Stage 2 Construction)

Burns & McDonnell Engineering Co., Inc.
9400 Ward Parkway
Kansas City, Missouri 64114
816-333-9400
Certificate of Authority No. : 17
BMcD Project No. 149612
BURNS McDONNELL

STATE OF ARKANSAS
LICENSED PROFESSIONAL ENGINEER
No. 17472
TRAVIS MICHAEL RAPP
1/22/2025
ORIGINAL SIGNATURE ON FILE

JOB NO. 061757
JONESBORO DR. CHILDREN'S TRAIL (LITTLE ROCK) (S)
LITTLE ROCK, ARKANSAS

REVISIONS		
NO.	DATE	DESCRIPTION

APPROACH SLAB DETAILS (SHEET 1 OF 2)

DRAWN BY: TLW	DATE: 3/2024
CHECKED BY: RMH	DATE: 5/2024
DESIGNED BY: JGS	DATE: 3/2024
ARDOT BRIDGE NO. 03492	
SCALE: AS SHOWN	JOB NUMBER: 061757

BR-13

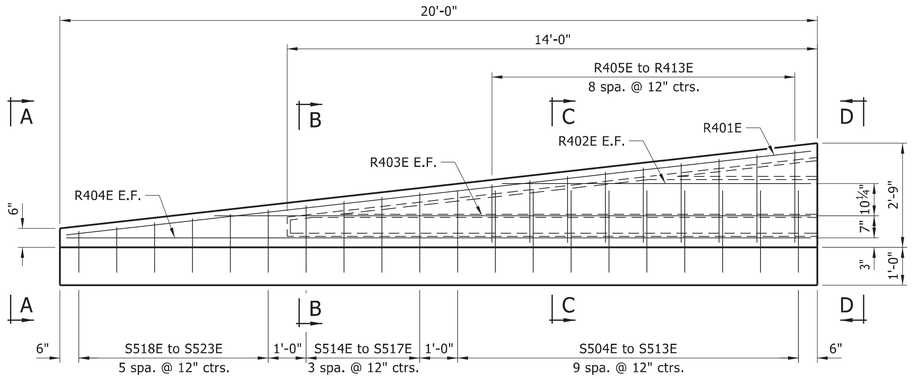

ELEVATION OF TRANSITIONAL APPROACH RAILING

Looking West at Begin Bridge, Railing at
End Bridge Similar but Opposite Hand
Scale: ½" = 1'-0"

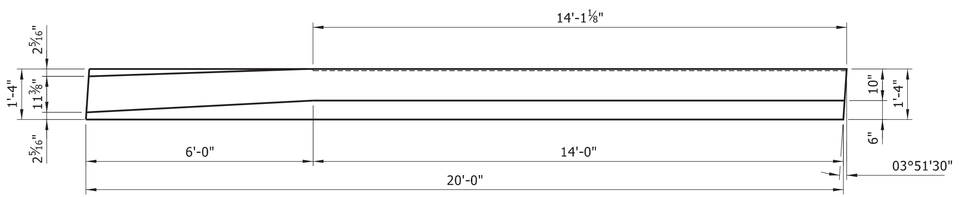

PLAN OF TRANSITIONAL APPROACH RAILING

Railing at Begin Bridge Shown, Railing at
End Bridge Similar but Opposite Hand
Scale: ½" = 1'-0"

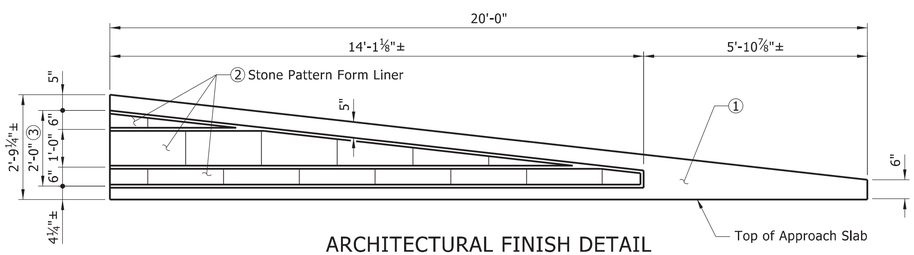

ARCHITECTURAL FINISH DETAIL

Looking East at Begin Bridge, Railing at
End Bridge Similar but Opposite Hand
Scale: ½" = 1'-0"

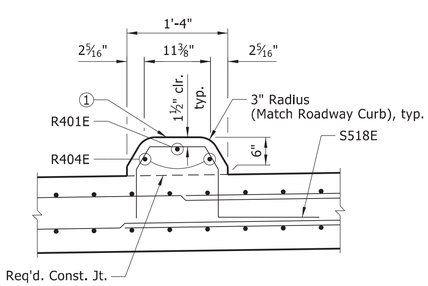

VIEW A-A

Scale: 1" = 1'-0"

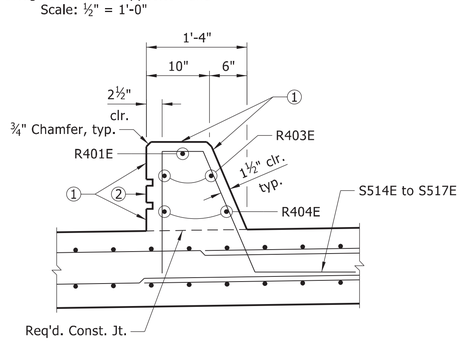

SECTION B-B

Scale: 1" = 1'-0"

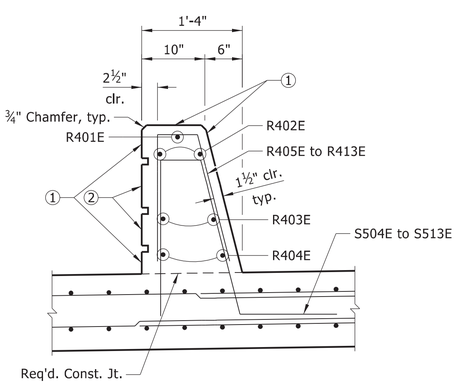

SECTION C-C

Scale: 1" = 1'-0"

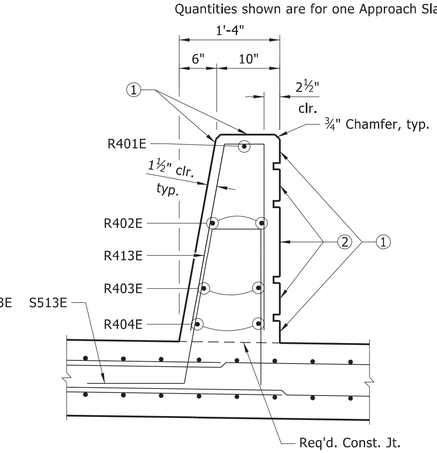

VIEW D-D

Scale: 1" = 1'-0"

BAR LIST - PER APPROACH SLAB

	MARK	NO. REQ'D.	LENGTH	P.D.
STAGE 1 CONSTRUCTION	K401E	21	4'-3"	2"
	K402E	21	4'-7"	Str.
	K403E	6	19'-8"	Str.
	S401E	25	30'-11"	3"
	S402E	62	19'-8"	Str.
	S403E	32	8'-4"	2"
	S501E	21	30'-11"	3¾"
	S801E	62	19'-8"	Str.
STAGE 2 CONSTRUCTION	K401E	21	4'-3"	2"
	K402E	21	4'-7"	Str.
	K403E	6	19'-8"	Str.
	R401E	1	19'-10"	Str.
	R402E	2	8'-2"	Str.
	R403E	2	15'-9"	Str.
	R404E	2	19'-8"	Str.
	R405E To R413E	1 Each	3'-5" To 5'-3½"	2"
	S402E	62	19'-8"	Str.
	S403E	32	8'-4"	2"
	S404E	25	30'-9"	3"
	S405E	25	2'-7"	Str.
	S502E	21	30'-9"	3¾"
	S503E	21	3'-2"	Str.
	S504E To S513E	1 Each	5'-11½" To 6'-1½"	2½"
	S514E To S517E	1 Each	5'-2" To 5'-10"	2½"
	S518E To S523E	1 Each	3'-11½" To 5'-1½"	2½"
	S801E	62	19'-8"	Str.

BENDING DIAGRAMS

Bar dimensions are out-to-out. Bars with an "E" suffix are to be epoxy coated.
The first bar designation number indicates the reinforcing bar size.

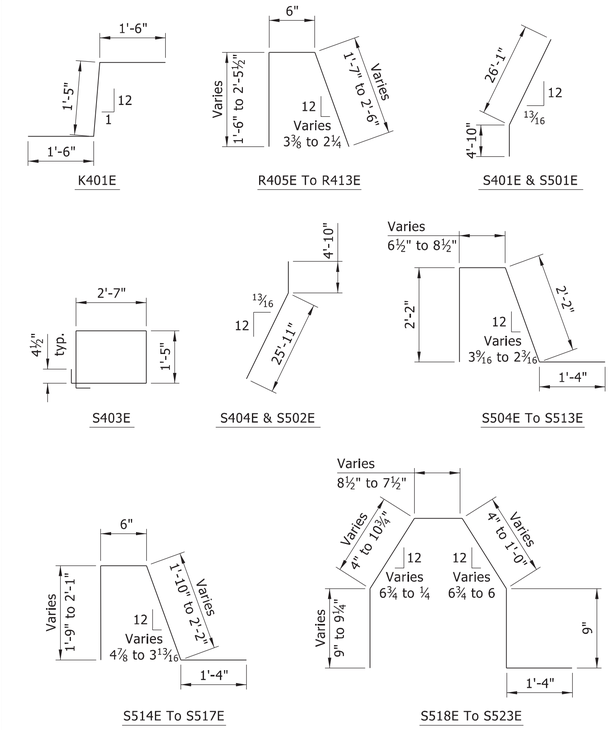

STAGE OF CONSTRUCTION	SCHEDULE OF QUANTITIES - FOR INFO ONLY				
	CLASS S(AE) CONCRETE	EPOXY COATED REINFORCING STEEL (GRADE 60)	MECHANICAL COUPLERS	CLASS 3 TEXTURED COATING FINISH	ARCHITECTURAL FINISH
STAGE 1 CONSTRUCTION	33.00 CU. YD.	5,650 LB.	46 EACH	----	----
STAGE 2 CONSTRUCTION	34.30 CU. YD.	5,960 LB.	----	9.4 SQ. YD.	17.0 SQ. FT.

Quantities shown are for one Approach Slab only.

NOTES:
Form liner shall be a max. depth of 1" to provide a min. clearance of 1½" to approach railing reinforcing.

A Class 3 Textured Coating Finish shall be applied to approach railing as specified in Special Provision "TEXTURED COATING FINISH" and in accordance with Subsection 802.19(b)(3).

① Class 3 Textured Coating Finish. Contractor shall match the color of the existing bridge.

② Class 3 Textured Coating Finish (Color = Brown, Color Chip No. 30219).

③ Limits of Architectural Finish

Burns & McDonnell Engineering Co., Inc.
9400 Ward Parkway
Kansas City, Missouri 64114
816-333-9400
Certificate of Authority No. : 17
BMcD Project No. 149612
BURNS McDONNELL

STATE OF ARKANSAS
LICENSED PROFESSIONAL ENGINEER
No. 17472
JESSE MICHAEL RAPP
1/22/2025
ORIGINAL SIGNATURE ON FILE

JOB NO. 061757
JONESBORO DR. CHILDREN'S TRAIL
(LITTLE ROCK) (S)
LITTLE ROCK, ARKANSAS

REVISIONS		
NO.	DATE	DESCRIPTION

APPROACH SLAB DETAILS (SHEET 2 OF 2)

DRAWN BY: TLW	DATE: 3/2024
CHECKED BY: RMH	DATE: 5/2024
DESIGNED BY: JGS	DATE: 3/2024
ARDOT BRIDGE NO. 03492	
SCALE: AS SHOWN	JOB NUMBER: 061757

BR-14

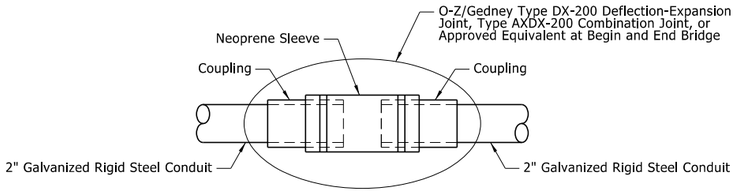

EXPANSION FITTING DETAIL, TYP.

No Scale

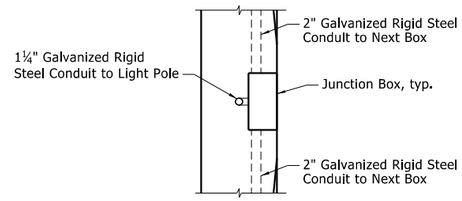

SECTION C-C

Scale: ¾" = 1'-0"

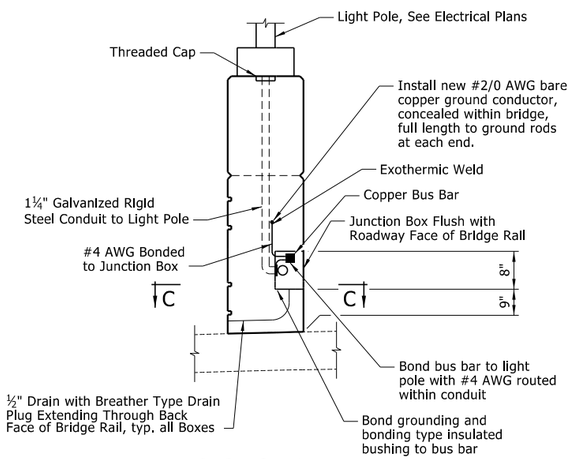

SECTION A-A

Scale: ¾" = 1'-0"

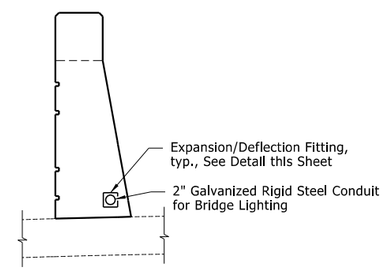

SECTION B-B

Scale: ¾" = 1'-0"

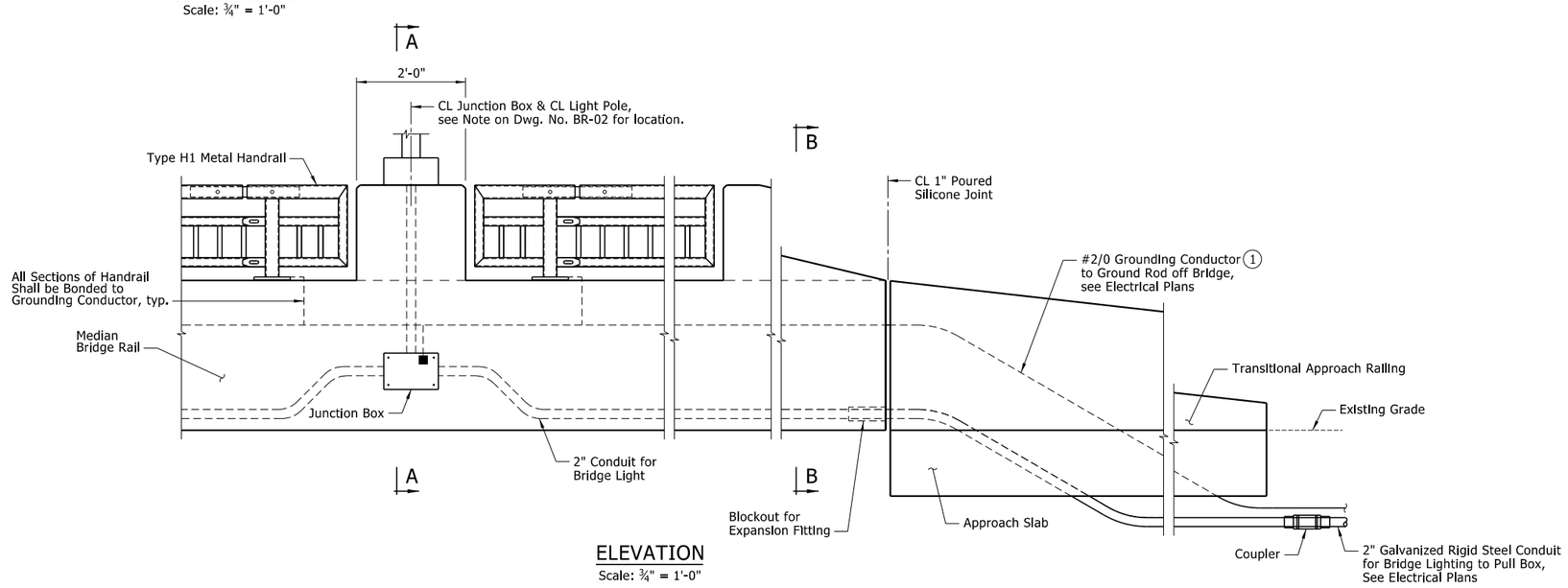

ELEVATION

Scale: ¾" = 1'-0"

(1) Internal copper ground bar bonded to box with minimum 6 lugs sized for connections as indicated.

NOTES:
For light fixtures and pole details, see Electrical Plans.

All hardware shall be corrosion resistant, galvanized or stainless rigid steel.

Construct foundation in accordance with pole manufacturer's guidelines and per these plans. Contractor shall coordinate with the Engineer for manufacturing requirements.

Use long sweep 90° elbows on all conduit bends that meet NEC minimum radius requirements.

Tie all pole, equipment ground, and all other metal equipment and grounding lugs together using minimum #4 AWG solid bare copper and approved connectors or exothermic welds and connect to ground rod system.

The Contractor shall use caution when installing conduits in bridge rail to not impact rebar or construction joints.

The general scope of the lighting work shall include junction boxes, expansion fittings, conduit and all incidentals necessary for installation of final lighting, wiring, power supply and additional pull boxes (see Electrical Plans). Only lighting materials and scope shown on the bridge plans will be included on the bridge. Payment for lighting work will be considered subsidiary to other pay items.

The Contractor shall coordinate the location of the pull boxes and other electrical details installed off the bridge with the City of Little Rock.

Provide and install ¾" dia. x 10'-0" copper clad steel sectional ground rods. Top of ground rods shall be a minimum 18" below finished grade. Exothermically weld each copper grounding conductor to the top of the associated rod. Maintain 30" installation depth of copper grounding conductor otherwise. Ground rods shall be located within 20' of end of each approach slab.

Contractor shall clearly mark the final location of the ground rods for future connection to lighting power source's grounding system.

Junction box and lid material shall be ¼" A36 steel. Fasteners shall be 3/16" dia. x ¾" S.S. FH socket screws. Weld per ARDOT standard spec. Hot dip galvanized and powder coat after fabrication per bridge railing general notes. Prefabricated junction boxes may be substituted by the Contractor if approved by the Engineer. The junction boxes shall be adequately anchored to the bridge rail by means of an approved mechanical device.

BOX NOTES:
NEMA 4X galvanized steel construction with gasket, recessed and flush in bridge rail wall.

Junction box dimensions shall be a minimum of 8" high x 8" wide x 6" deep.

Splice wires in box according to NEC. All wires shall be type THHW, THHN/THWN-2, or XHHW-2.

Burns & McDonnell Engineering Co., Inc.
9400 Ward Parkway
Kansas City, Missouri 64114
816-333-9400
Certificate of Authority No.: 17
BMcD Project No. 149612
BURNS McDONNELL

STATE OF ARKANSAS
LICENSED PROFESSIONAL ENGINEER
No. 17472
JESSIE MICHAEL RAPP
1/22/2025
ORIGINAL SIGNATURE ON FILE

JOB NO. 061757
JONESBORO DR. CHILDREN'S TRAIL
(LITTLE ROCK) (S)
LITTLE ROCK, ARKANSAS

REVISIONS		
NO.	DATE	DESCRIPTION

ELECTRICAL DETAILS

DRAWN BY: TLW	DATE: 3/2024
CHECKED BY: RMH	DATE: 5/2024
DESIGNED BY: JGS	DATE: 3/2024
ARDOT BRIDGE NO. 03492	
SCALE: AS SHOWN	JOB NUMBER: 061757

BR-15

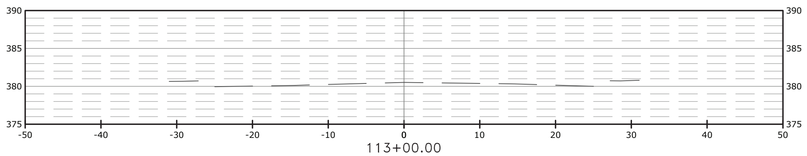

Total Volume at Station 113+00.00	
Cut Area	0.00
Fill Area	0.00
Cut Vol	0.00
Fill Vol	0.00
Net Vol	0.00

ORIGINAL ELEV: 380.51
DESIGN ELEV:

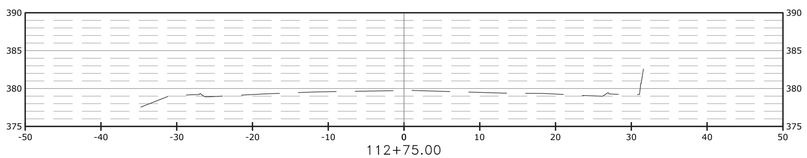

Total Volume at Station 112+75.00	
Cut Area	0.00
Fill Area	0.00
Cut Vol	0.00
Fill Vol	0.00
Net Vol	0.00

ORIGINAL ELEV: 379.73
DESIGN ELEV:

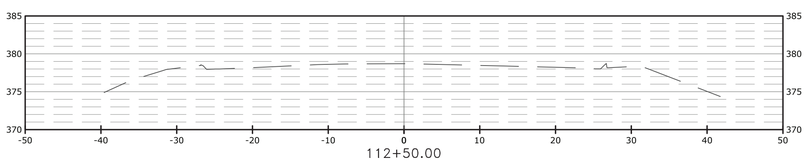

Total Volume at Station 112+50.00	
Cut Area	0.00
Fill Area	0.00
Cut Vol	0.00
Fill Vol	0.00
Net Vol	0.00

ORIGINAL ELEV: 378.69
DESIGN ELEV:

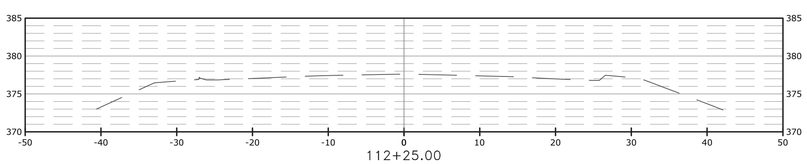

Total Volume at Station 112+25.00	
Cut Area	0.00
Fill Area	0.00
Cut Vol	0.00
Fill Vol	0.00
Net Vol	0.00

ORIGINAL ELEV: 377.61
DESIGN ELEV:

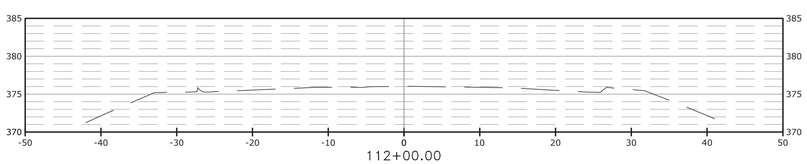

Total Volume at Station 112+00.00	
Cut Area	0.00
Fill Area	0.00
Cut Vol	0.00
Fill Vol	0.00
Net Vol	0.00

ORIGINAL ELEV: 376.04
DESIGN ELEV:

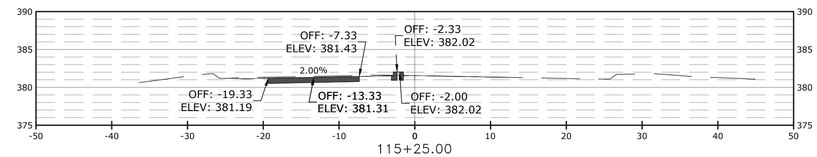

Total Volume at Station 115+25.00	
Cut Area	10.91
Fill Area	4.42
Cut Vol	10.09
Fill Vol	2.48
Net Vol	28.97

ORIGINAL ELEV: 381.54
DESIGN ELEV: 381.55

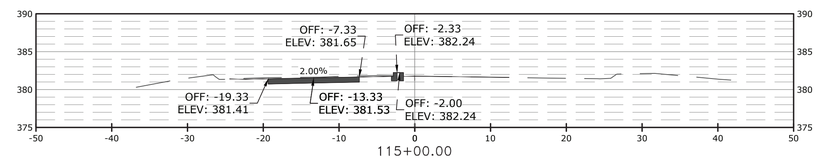

Total Volume at Station 115+00.00	
Cut Area	10.89
Fill Area	0.92
Cut Vol	9.90
Fill Vol	0.59
Net Vol	21.35

ORIGINAL ELEV: 381.78
DESIGN ELEV: 381.77

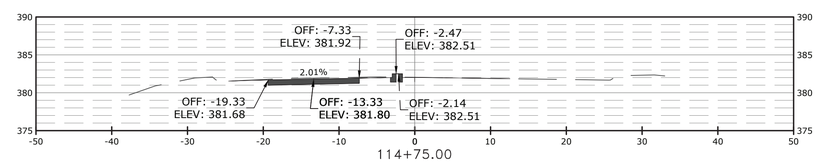

Total Volume at Station 114+75.00	
Cut Area	10.50
Fill Area	0.36
Cut Vol	8.76
Fill Vol	0.39
Net Vol	12.04

ORIGINAL ELEV: 382.04
DESIGN ELEV: 382.04

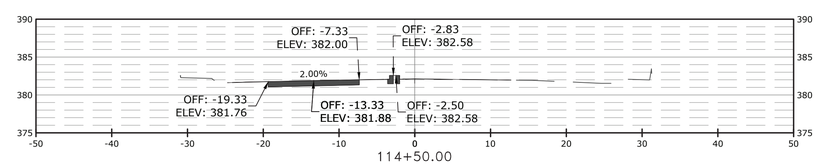

Total Volume at Station 114+50.00	
Cut Area	8.41
Fill Area	0.48
Cut Vol	3.89
Fill Vol	0.22
Net Vol	3.67

ORIGINAL ELEV: 382.13
DESIGN ELEV: 382.12

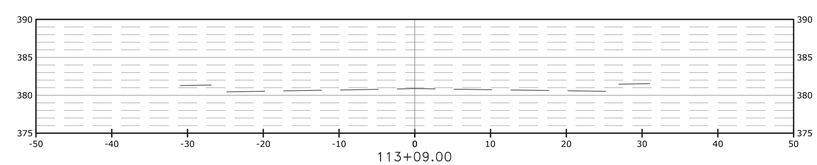

Total Volume at Station 113+09.00	
Cut Area	0.00
Fill Area	0.00
Cut Vol	0.00
Fill Vol	0.00
Net Vol	0.00

ORIGINAL ELEV: 380.87
DESIGN ELEV:

EARTHWORK QUANTITIES:
TO BE PAID PER PLAN
QUANTITIES ONLY

SCALE:
1"= 10' HORIZ.
1"= 10' VERT.

McCLELLAND CONSULTING ENGINEERS, INC.
DESIGNED TO SERVE
7302 KANIS ROAD
LITTLE ROCK, ARKANSAS 72204
PH: (501) 371-0272
HTTP://WWW.MCE.US.COM

STATE OF ARKANSAS
LICENSED PROFESSIONAL ENGINEER
No. 18021
TAYLOR CLARK
2-20-25

JOB NO. 061757
JONESBORO DR. CHILDREN'S TRAIL (LITTLE ROCK) (S)
LITTLE ROCK, ARKANSAS

811 Know what's below. Call before you dig.

REVISIONS

REV	DATE	DESCRIPTION

CROSS SECTIONS I

DESIGNED BY:	DRAWN BY:
WTC	WTC
DATE: 1/23/25	REVISION:
SCALE: N.T.S.	JOB NUMBER: 22-5767

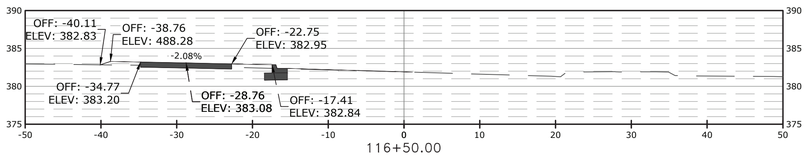

Total Volume at Station 116+50.00	
Cut Area	8.14
Fill Area	12.55
Cut Vol	11.16
Fill Vol	10.34
Net Vol	16.31

ORIGINAL ELEV: 381.90
DESIGN ELEV: 381.90

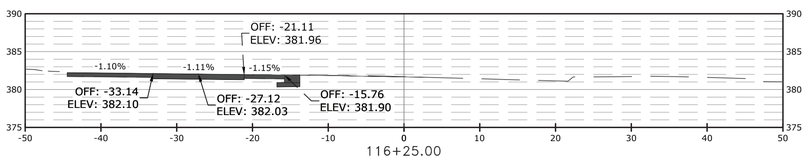

Total Volume at Station 116+25.00	
Cut Area	13.81
Fill Area	10.48
Cut Vol	9.69
Fill Vol	11.87
Net Vol	15.50

ORIGINAL ELEV: 381.69
DESIGN ELEV: 381.66

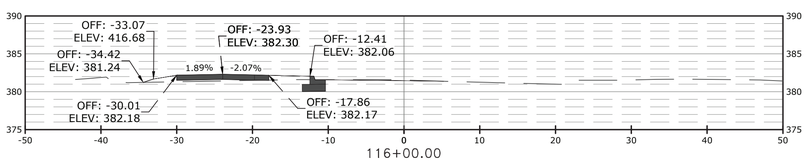

Total Volume at Station 116+00.00	
Cut Area	5.56
Fill Area	16.08
Cut Vol	5.00
Fill Vol	15.11
Net Vol	17.67

ORIGINAL ELEV: 381.53
DESIGN ELEV: 381.45

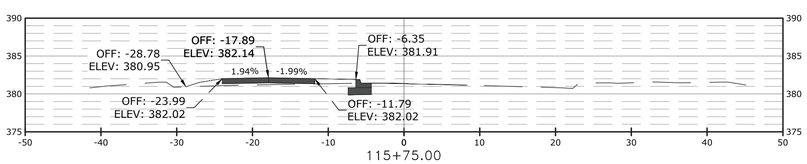

Total Volume at Station 115+75.00	
Cut Area	4.86
Fill Area	16.93
Cut Vol	6.68
Fill Vol	11.57
Net Vol	27.78

ORIGINAL ELEV: 381.39
DESIGN ELEV: 381.34

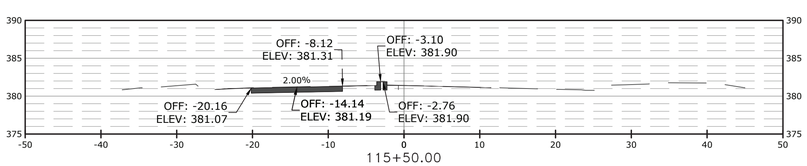

Total Volume at Station 115+50.00	
Cut Area	8.89
Fill Area	9.13
Cut Vol	9.58
Fill Vol	5.88
Net Vol	32.67

ORIGINAL ELEV: 381.41
DESIGN ELEV: 381.41

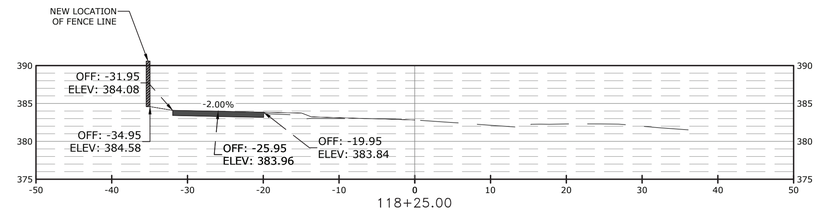

Total Volume at Station 118+25.00	
Cut Area	1.56
Fill Area	2.58
Cut Vol	1.50
Fill Vol	1.46
Net Vol	28.83

ORIGINAL ELEV: 382.82
DESIGN ELEV: 382.82

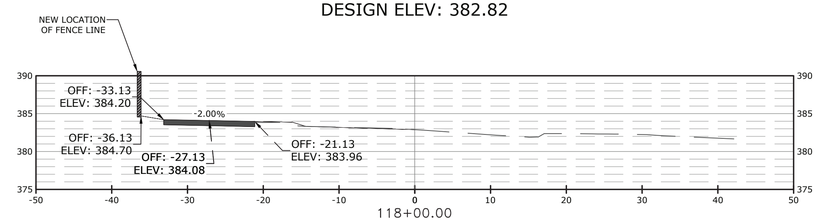

Total Volume at Station 118+00.00	
Cut Area	1.67
Fill Area	0.57
Cut Vol	1.41
Fill Vol	0.97
Net Vol	28.79

ORIGINAL ELEV: 382.89
DESIGN ELEV: 382.89

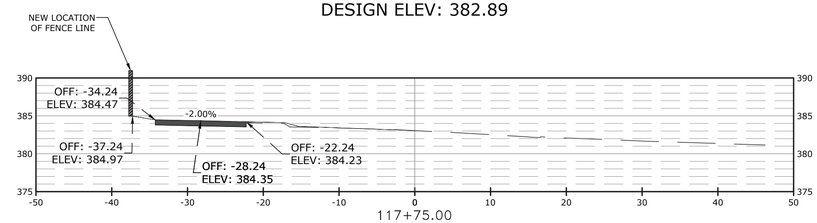

Total Volume at Station 117+75.00	
Cut Area	1.38
Fill Area	1.53
Cut Vol	3.85
Fill Vol	0.77
Net Vol	28.34

ORIGINAL ELEV: 383.06
DESIGN ELEV: 383.06

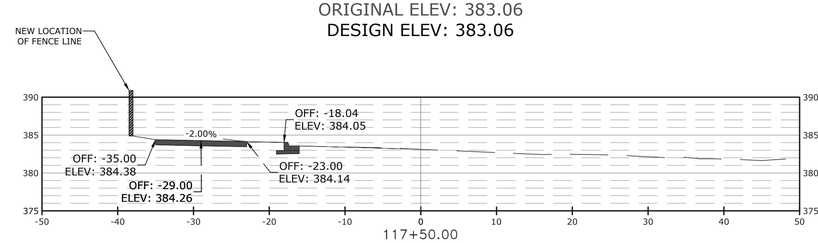

Total Volume at Station 117+50.00	
Cut Area	6.52
Fill Area	0.06
Cut Vol	3.28
Fill Vol	0.03
Net Vol	25.26

ORIGINAL ELEV: 383.12
DESIGN ELEV: 383.12

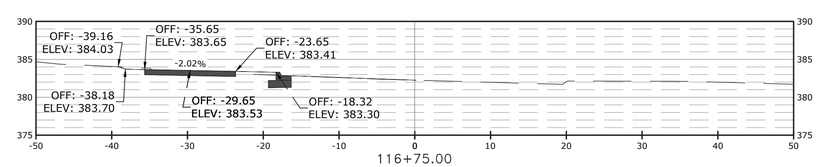

Total Volume at Station 116+75.00	
Cut Area	10.69
Fill Area	3.83
Cut Vol	9.68
Fill Vol	7.67
Net Vol	18.32

ORIGINAL ELEV: 382.25
DESIGN ELEV: 382.25

EARTHWORK QUANTITIES:
TO BE PAID PER PLAN
QUANTITIES ONLY

SCALE:
1"= 10' HORIZ.
1"= 10' VERT.

MCE McCLELLAND CONSULTING ENGINEERS, INC.
DESIGNED TO SERVE
7302 KANIS ROAD
LITTLE ROCK, ARKANSAS 72204
PH: (501) 371-0272
HTTP://WWW.MCE.US.COM

STATE OF ARKANSAS
LICENSED PROFESSIONAL ENGINEER
No.18021
TAYLOR CLARK
2-20-25

JOB NO. 061757
JONESBORO DR. CHILDREN'S TRAIL (LITTLE ROCK) (S)
LITTLE ROCK, ARKANSAS

811 Know what's below. Call before you dig.

REVISIONS

REV	DATE	DESCRIPTION

CROSS SECTIONS II

DESIGNED BY:	DRAWN BY:
WTC	WTC
DATE: 1/23/25	REVISION:
SCALE: N.T.S.	JOB NUMBER: 22-5767

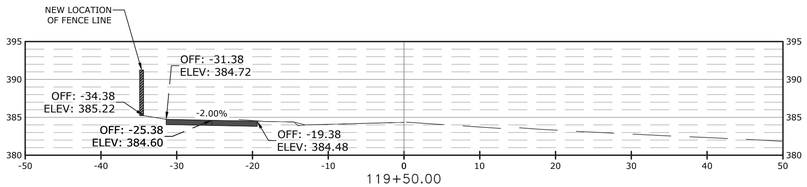

Total Volume at Station 119+50.00	
Cut Area	1.93
Fill Area	0.28
Cut Vol	1.73
Fill Vol	0.28
Net Vol	43.48

ORIGINAL ELEV: 384.33
DESIGN ELEV: 384.33

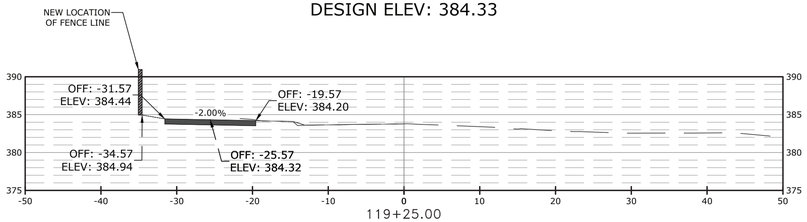

Total Volume at Station 119+25.00	
Cut Area	2.01
Fill Area	0.36
Cut Vol	5.93
Fill Vol	0.16
Net Vol	42.03

ORIGINAL ELEV: 383.79
DESIGN ELEV: 383.79

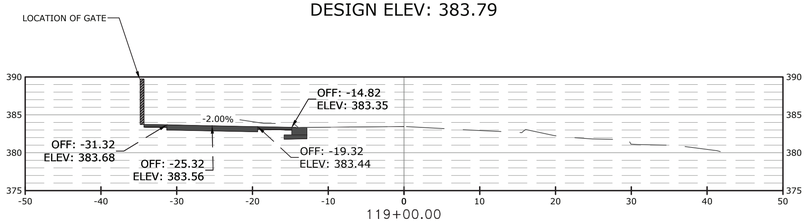

Total Volume at Station 119+00.00	
Cut Area	11.42
Fill Area	0.01
Cut Vol	5.87
Fill Vol	0.14
Net Vol	36.27

ORIGINAL ELEV: 383.45
DESIGN ELEV: 383.45

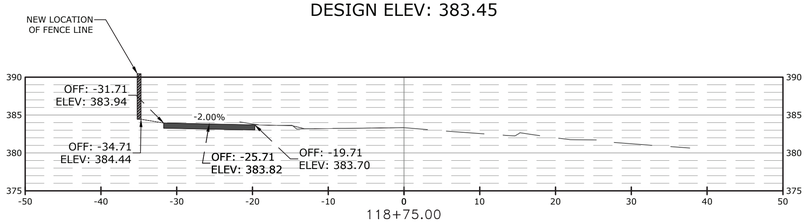

Total Volume at Station 118+75.00	
Cut Area	1.88
Fill Area	0.31
Cut Vol	1.70
Fill Vol	0.27
Net Vol	30.54

ORIGINAL ELEV: 383.33
DESIGN ELEV: 383.33

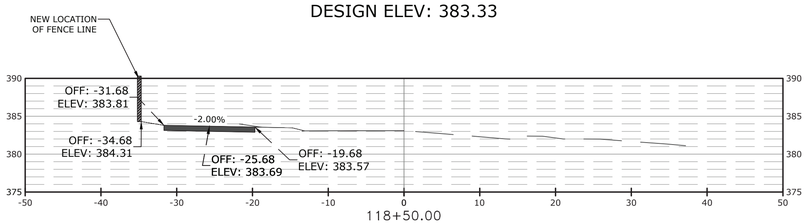

Total Volume at Station 118+50.00	
Cut Area	2.00
Fill Area	0.29
Cut Vol	1.56
Fill Vol	1.28
Net Vol	29.11

ORIGINAL ELEV: 383.10
DESIGN ELEV: 383.10

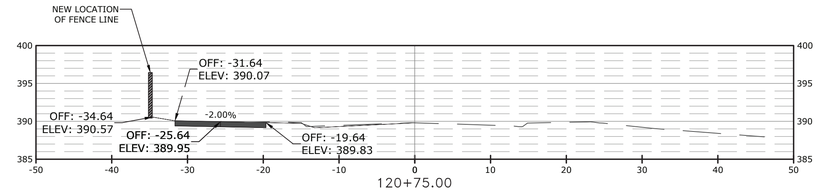

Total Volume at Station 120+75.00	
Cut Area	4.01
Fill Area	0.11
Cut Vol	2.48
Fill Vol	0.22
Net Vol	56.62

ORIGINAL ELEV: 389.79
DESIGN ELEV: 389.79

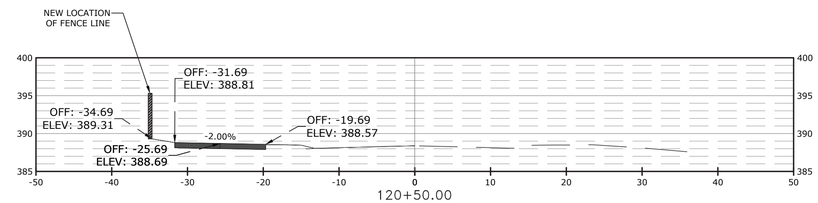

Total Volume at Station 120+50.00	
Cut Area	1.62
Fill Area	0.37
Cut Vol	3.39
Fill Vol	0.17
Net Vol	54.35

ORIGINAL ELEV: 388.39
DESIGN ELEV: 388.39

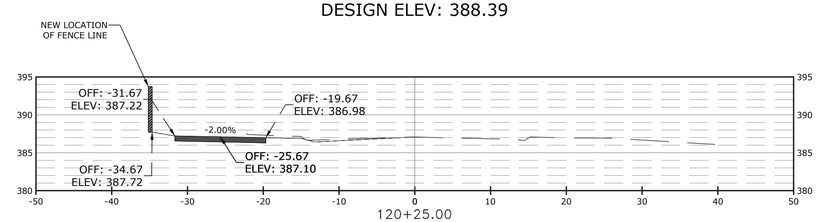

Total Volume at Station 120+25.00	
Cut Area	6.06
Fill Area	0.01
Cut Vol	3.97
Fill Vol	0.14
Net Vol	51.13

ORIGINAL ELEV: 387.08
DESIGN ELEV: 387.08

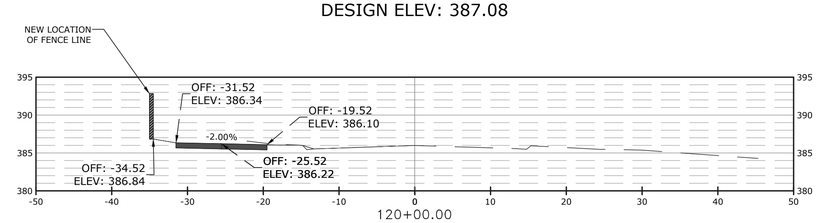

Total Volume at Station 120+00.00	
Cut Area	2.94
Fill Area	0.29
Cut Vol	2.40
Fill Vol	0.27
Net Vol	47.30

ORIGINAL ELEV: 385.99
DESIGN ELEV: 385.99

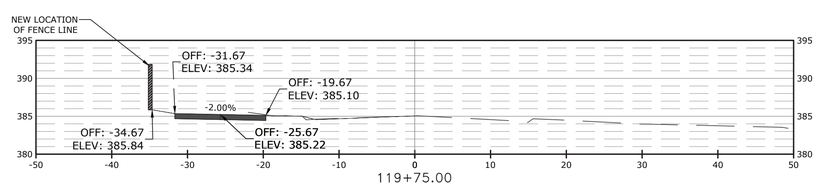

Total Volume at Station 119+75.00	
Cut Area	2.54
Fill Area	0.32
Cut Vol	1.96
Fill Vol	0.27
Net Vol	45.17

ORIGINAL ELEV: 385.05
DESIGN ELEV: 385.05

EARTHWORK QUANTITIES:
TO BE PAID PER PLAN
QUANTITIES ONLY

SCALE:
1"= 10' HORIZ.
1"= 10' VERT.

McCLELLAND CONSULTING ENGINEERS, INC.
DESIGNED TO SERVE
7302 KANIS ROAD
LITTLE ROCK, ARKANSAS 72204
PH: (501) 371-0272
HTTP://WWW.MCE.US.COM

STATE OF ARKANSAS
LICENSED PROFESSIONAL ENGINEER
No. 18021
TAYLOR CLARK
2-20-25

JOB NO. 061757
JONESBORO DR. CHILDREN'S TRAIL (LITTLE ROCK) (S)
LITTLE ROCK, ARKANSAS

811 Know what's below. Call before you dig.

REVISIONS

REV	DATE	DESCRIPTION

CROSS SECTIONS III

DESIGNED BY: WTC	DRAWN BY: WTC
DATE: 1/23/25	REVISION:
SCALE: N.T.S.	JOB NUMBER: 22-5767

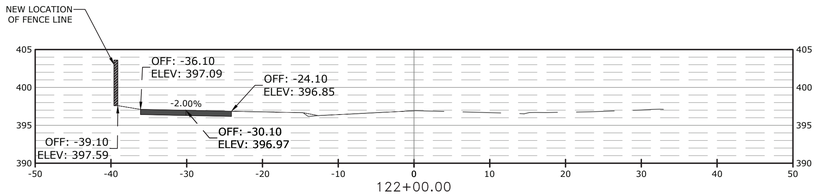

Total Volume at Station 122+00.00	
Cut Area	0.08
Fill Area	0.36
Cut Vol	2.03
Fill Vol	0.71
Net Vol	75.40

ORIGINAL ELEV: 396.92
DESIGN ELEV: 396.92

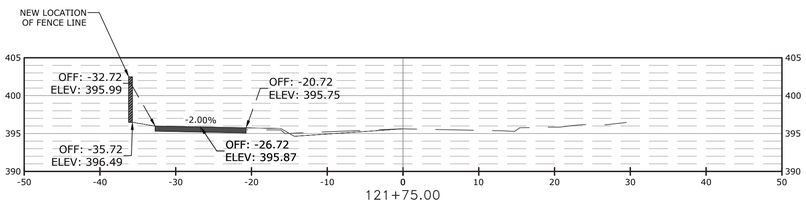

Total Volume at Station 121+75.00	
Cut Area	4.48
Fill Area	1.25
Cut Vol	2.82
Fill Vol	0.73
Net Vol	74.08

ORIGINAL ELEV: 395.62
DESIGN ELEV: 395.62

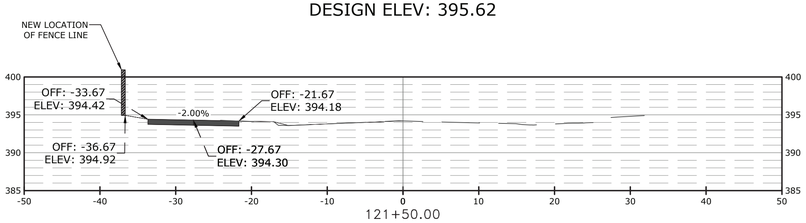

Total Volume at Station 121+50.00	
Cut Area	1.87
Fill Area	0.42
Cut Vol	2.56
Fill Vol	0.62
Net Vol	71.99

ORIGINAL ELEV: 394.19
DESIGN ELEV: 394.19

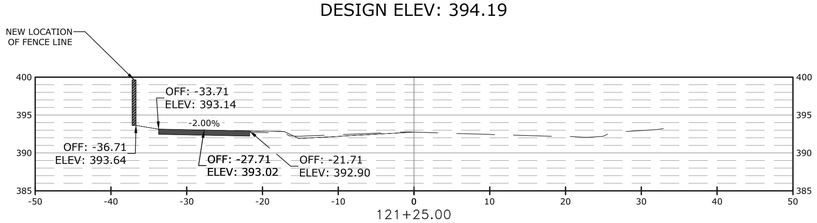

Total Volume at Station 121+25.00	
Cut Area	3.91
Fill Area	0.99
Cut Vol	6.94
Fill Vol	0.43
Net Vol	70.05

ORIGINAL ELEV: 392.75
DESIGN ELEV: 392.75

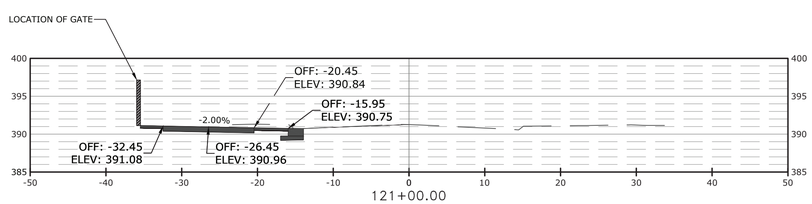

Total Volume at Station 121+00.00	
Cut Area	11.79
Fill Area	0.00
Cut Vol	6.97
Fill Vol	0.05
Net Vol	63.55

ORIGINAL ELEV: 391.27
DESIGN ELEV: 391.27

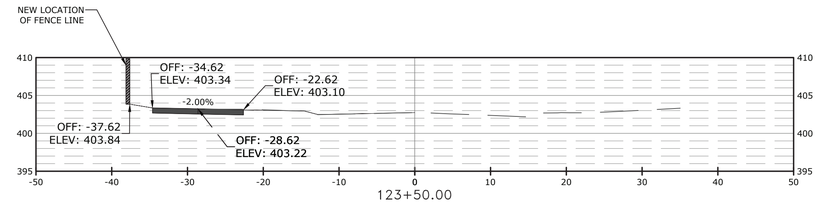

Total Volume at Station 123+50.00	
Cut Area	6.99
Fill Area	0.39
Cut Vol	6.73
Fill Vol	1.14
Net Vol	102.52

ORIGINAL ELEV: 402.73
DESIGN ELEV: 402.73

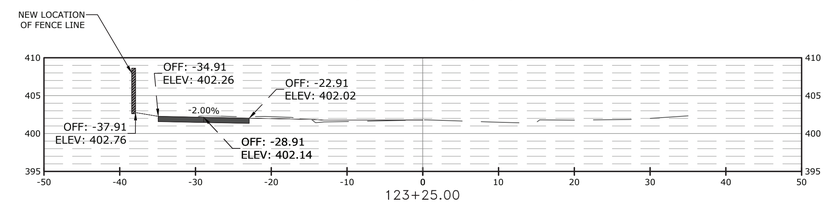

Total Volume at Station 123+25.00	
Cut Area	7.55
Fill Area	2.08
Cut Vol	6.24
Fill Vol	1.08
Net Vol	96.93

ORIGINAL ELEV: 401.78
DESIGN ELEV: 401.78

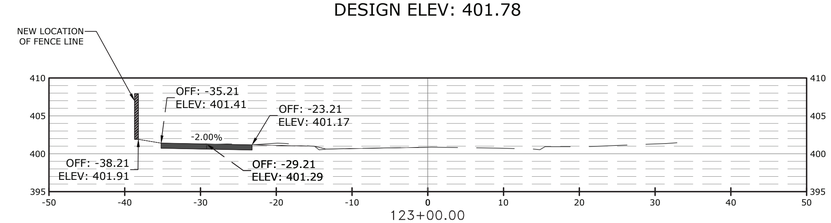

Total Volume at Station 123+00.00	
Cut Area	5.93
Fill Area	0.26
Cut Vol	3.66
Fill Vol	1.44
Net Vol	91.77

ORIGINAL ELEV: 400.86
DESIGN ELEV: 400.86

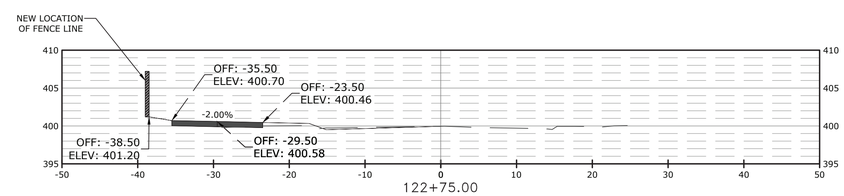

Total Volume at Station 122+75.00	
Cut Area	1.98
Fill Area	2.86
Cut Vol	4.42
Fill Vol	1.56
Net Vol	89.56

ORIGINAL ELEV: 399.96
DESIGN ELEV: 399.96

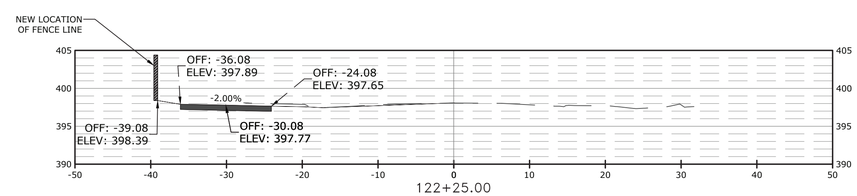

Total Volume at Station 122+25.00	
Cut Area	9.08
Fill Area	0.11
Cut Vol	4.10
Fill Vol	0.22
Net Vol	79.28

ORIGINAL ELEV: 398.07
DESIGN ELEV: 398.07

EARTHWORK QUANTITIES:
TO BE PAID PER PLAN
QUANTITIES ONLY

SCALE:
1"= 10' HORIZ.
1"= 10' VERT.

McCLELLAND CONSULTING ENGINEERS, INC.
DESIGNED TO SERVE
7302 KANIS ROAD
LITTLE ROCK, ARKANSAS 72204
PH: (501) 371-0272
HTTP://WWW.MCE.US.COM

STATE OF ARKANSAS
LICENSED PROFESSIONAL ENGINEER
No. 18021
TAYLOR CLARK
2-20-25

JOB NO. 061757
JONESBORO DR. CHILDREN'S TRAIL (LITTLE ROCK) (S)
LITTLE ROCK, ARKANSAS

811 Know what's below. Call before you dig.

REVISIONS

REV	DATE	DESCRIPTION

CROSS SECTIONS IV

DESIGNED BY:	DRAWN BY:
WTC	WTC
DATE: 1/23/25	REVISION:
SCALE: N.T.S.	JOB NUMBER: 22-5767

TITLE	Issue Date	Revision Date
RECTANGULAR CURB INLET WITH THROAT EXTENSIONS	APR 2015	PW–1A

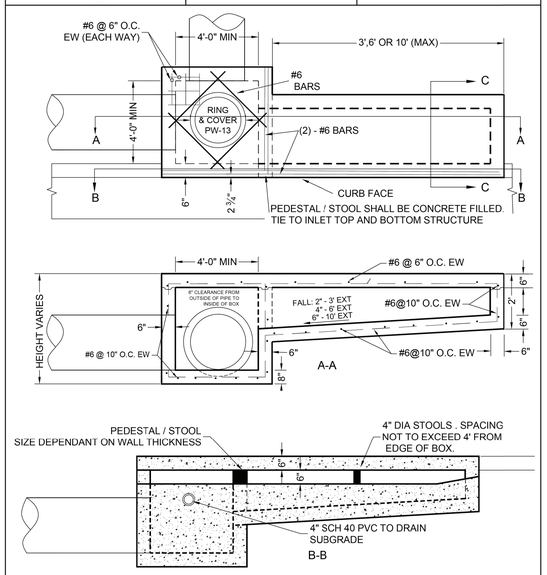

TITLE	Issue Date	Revision Date
GUTTER DEPRESSION DETAIL TYPICAL DEPRESSION IS 4"	02/15	PW–3 APR 2015

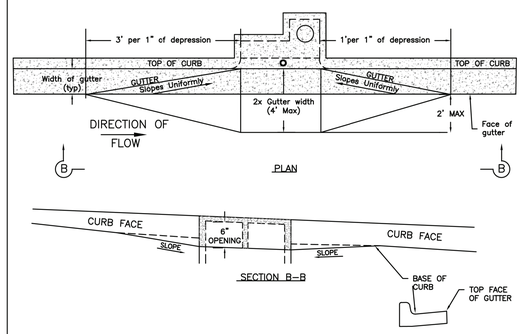

NOTE: LOW POINT /(SAG) INLETS : SLOPE SHALL BE 1 FT PER 1" OF DEPRESSION BOTH SIDES

GUTTER DEPRESSION DETAIL

NOTE: THE TOP FACE OF GUTTER SHALL DROP 1/2 OF THE GUTTER DEPRESSION ACROSS THE INLET OPENING.

TITLE	Issue Date	Revision Date
AREA INLET	APRIL 2014	PW–6 APR 2015

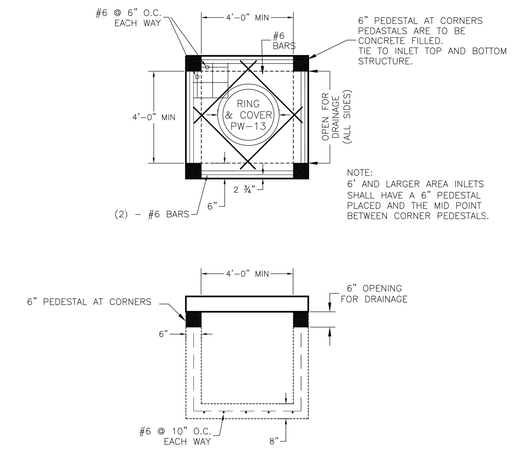

NOTE:

PRE–CAST STRUCTURES ARE ALLOWED. IT SHALL BE THE CONTRACTOR'S RESPONSIBILITY TO ASSURE COMPLIANCE OF PRE–CAST STRUCTURES TO STANDARD DESIGN DETAILS AND PLAN CONFIGURATIONS.

ROUND AREA INLETS ARE ALLOWED. REFER TO PW–1B FOR STRUCTURE REINFORCING.

TITLE	Issue Date	Revision Date
TYPICAL DRAINAGE INLET THROAT OPENING DETAIL (NOT IN RADIUS)	AUG, 2006	PW–9 APR 2015

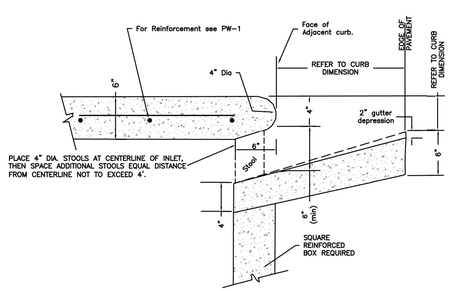

INLET THROAT BETWEEN STOOLS

NOTE: This detail is not to be used for inlets in curb radius. See PW–10 for detail of inlet top in curb radius.

TITLE	Issue Date	Revision Date
CURB INLET STEPS	AUG, 2006	PW–12 APR 2015

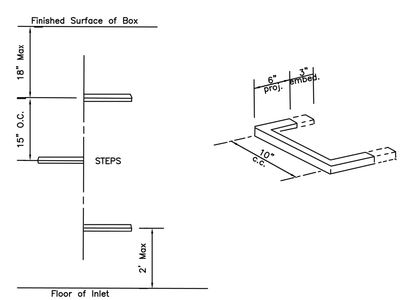

A. Manhole steps: corrosion resistant, coated, and reinforced with steel per ASTM C–478. Steel reinforcing minimum 1/2" diameter.

B. Acceptable Manufacturers:

1. Utility Products Inc. Perma Step 100–2
2. ICM Inc. Polypropylene coated steps.
3. M.A Industries, Inc. Polypropylene coated steps. #PSI–PF
4. BOWCO, by H. Bowen Co.

C. Capable of supporting minimum 300 lb. load.

D. Non–Slip textured treads.

E. Required in all structures 3'–0" deep or greater.

TITLE	Issue Date	Revision Date
MANHOLE FRAME & COVER	AUG, 2006	PW–13 APR 2015

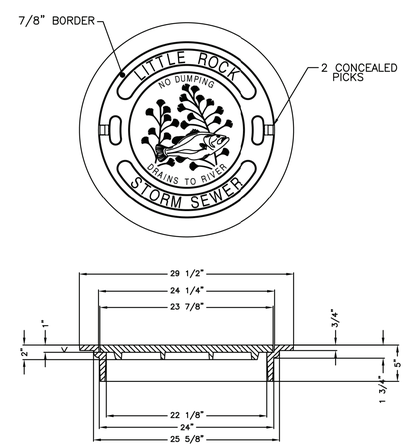

MATERIAL:	CAST GRAY IRON ASTM A–48, CLASS 35B
FINISH:	NO PAINT
WEIGHT:	COVER 140 LBS. FRAME 133 LBS.

NOTE:
1. FURNISHED WITH MACHINED HORIZONTAL BEARING SURFACES.

ITEM:
1. #2018–A (ENVIRONMENTAL) AS MANUFACTURED BY DEETER FOUNDARY, INC. OR EAST JORDAN 2750A MANHOLE COVER (275–24) WITH ABOVE LETTERING, OR APPROVED EQUAL PER ENGINEER.

McCLELLAND CONSULTING ENGINEERS, INC.
DESIGNED TO SERVE
7302 KANIS ROAD
LITTLE ROCK, ARKANSAS 72204
PH: (501) 371-0272
HTTP://WWW.MCE.US.COM

STATE OF ARKANSAS LICENSED PROFESSIONAL ENGINEER NO:18021 TAYLOR CLARK
2-20-25

JOB NO. 061757
JONESBORO DR. CHILDREN'S TRAIL (LITTLE ROCK) (S)
LITTLE ROCK, ARKANSAS

811 Know what's below. Call before you dig.

REVISIONS

REV	DATE	DESCRIPTION

STANDARD DETAILS I

DESIGNED BY: WTC	DRAWN BY: WTC
DATE: 1/23/25	REVISION:
SCALE: N.T.S.	JOB NUMBER: 22-5767

TITLE	Issue Date	Revision Date
DRAINAGE PIPE BACKFILL	AUG, 2006	APR 2015

PW-26

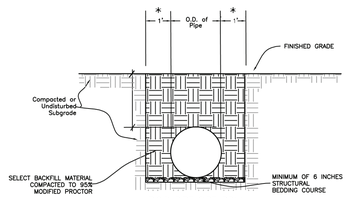

RIGID PIPE SIDE DRAIN
(REINFORCED CONCRETE PIPE)

OUTSIDE ROADWAY / SIDE DRAIN BEDDING

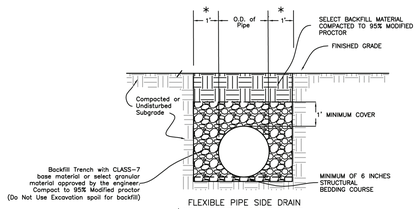

FLEXIBLE PIPE SIDE DRAIN
(HIGH DENSITY POLYETHYLENE
HIGH DENSITY POLYPROPYLENE)

OUTSIDE ROADWAY / SIDE DRAIN BEDDING

* SEE PUBLIC WORKS STANDARD SPECIFICATIONS FOR TRENCH WIDTH AND DEPTH REQUIRED FOR STORM DRAIN APPLICATIONS.

TITLE	Issue Date	Revision Date
CURB & GUTTER SECTIONS RESIDENTIAL & COLLECTOR STREETS	AUG, 2006	APR 2015

PW-29

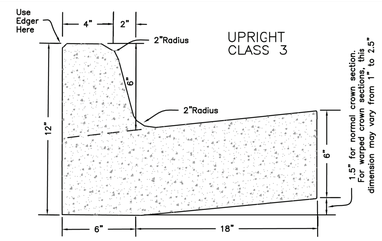

Install 1/2" Bituminous Expansion Joint Material At 100' Max. Intervals Or At Tie Ins To Boxes, Radius Returns Or Driveway Aprons. Control Joints 15' Max. O.C.

Joint Sealant Shall be Sonneborn SL2 Self Leveling Urethane as Manufactured by Chemrex or Equivalent.

TITLE	Issue Date	Revision Date
DRIVEWAY DETAIL FOR RESIDENTIAL DRIVEWAYS (SIDEWALK AT BACK OF CURB)	AUG, 2006	APR 2015

PW-32

Spacing Per City Ordinance 31-210

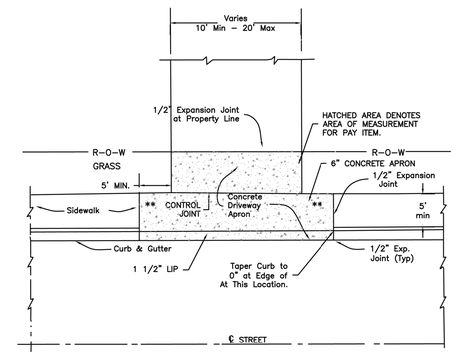

* Sidewalks at back of curb by permission of Department of Public Works (only when conditions dictate).

** Sidewalk area at driveway shall have cross slope of 1:50. See City Ordinance Section 31-210 for permissable driveway slopes.

Thickness and reinforcements are required for conditions & expected wheel loading - 6" minimum thickness.

DRIVEWAY GRADES SHALL BE DESIGNED BY ENGINEER TO KEEP STORMWATER IN STREET, 2% MINIMUM SLOPE AT SIDEWALK CROSSING, MAXIMUM % OF GRADE CHANGE IS 16.

TITLE	Issue Date	Revision Date
SIDEWALK DETAILS	AUG, 2006	APR 2015

PW-41

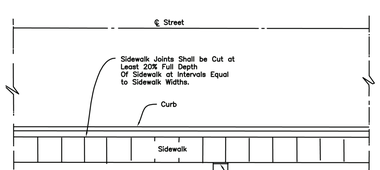

NOTE:

(1).1/2" Expansion Joint Spacing at 60' Or adjacent to Structures and Drives.
(2).Sidewalk Expansion Material is Required Between Sidewalk and Curb.
(3).Dowel bars with Expansion Joint Material required at inlets. See PW-42.

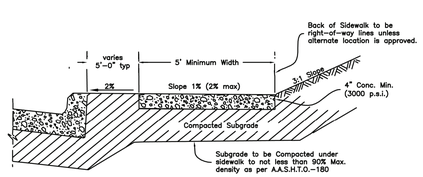

SECTION

Expansion joint shall be installed between public and private sidewalk, buildings or driveways.

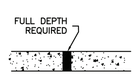

EXPANSION DETAIL

TITLE	Issue Date	Revision Date
SIDEWALK ADJACENT TO CURB (AT-GRADE SECTION)	AUG, 2006	APR 2015

PW-42

GENERAL NOTE: PUBLIC SIDEWALK SHALL BE BUFFERED FROM STREET. SIDEWALK MAY BE INSTALLED ADJACENT TO CURB ONLY UPON RECIEVING WRITTEN AUTHORIZATION FROM PUBLIC WORKS.

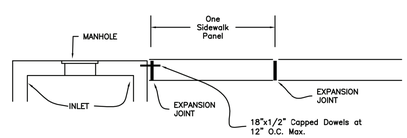

SIDEWALK AT INLETS

NOTE:
1/2" Expansion Joint Spacing at 60' Or adjacent to Structures and Drives.
Sidewalk Expansion Material is Required Between Sidewalks and Inlets.
Dowel bars with Expansion Joint Material required at Inlets.

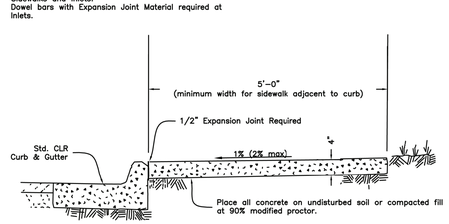

Expansion joint shall be installed between public sidewalks and private sidewalks, buildings or driveways.

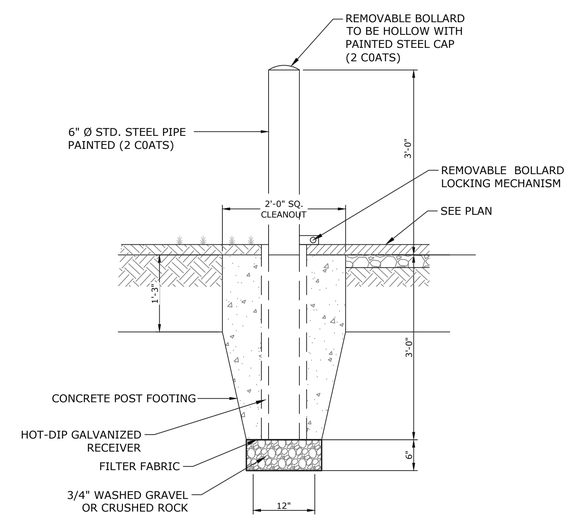

REMOVABLE BOLLARD DETAIL

NTS

McCLELLAND CONSULTING ENGINEERS, INC.
DESIGNED TO SERVE
7302 KANIS ROAD
LITTLE ROCK, ARKANSAS 72204
PH: (501) 371-0272
HTTP://WWW.MCE.US.COM

STATE OF ARKANSAS
LICENSED PROFESSIONAL ENGINEER
No. 18021
TAYLOR CLARK
2-20-25

JOB NO. 061757
JONESBORO DR. CHILDREN'S TRAIL (LITTLE ROCK) (S)
LITTLE ROCK, ARKANSAS

811 Know what's below. Call before you dig.

REVISIONS

REV	DATE	DESCRIPTION

STANDARD DETAILS II

DESIGNED BY:	DRAWN BY:
WTC	WTC
DATE: 1/23/25	REVISION:
SCALE: N.T.S.	JOB NUMBER: 22-5767

TITLE	Issue Date	Revision Date
ACCESS RAMP (GENERAL NOTES & RAMP CRITERIA)	AUG. 2006	PW-48 APR 2015

(A) THE SLOPE OF THE RAMP SHALL NOT EXCEED 1:12 (8.33%). CONTRACTORS SHOULD FORM RAMPS AT A GRADE LOWER THAN 8.33% TO ALLOW ROOM FOR CONSTRUCTION TOLERANCES. POURING AND FINISHING RAMPS WITHOUT THE AID OF A DIGITAL LEVEL IN CHECKING GRADES IS DISCOURAGED, BECAUSE CONTRACTORS WILL BE REQUIRED TO REMOVE ANY RAMP WITH GRADES EXCEEDING REQUIREMENTS SHOWN IN STANDARD DETAILS. RAMP SURFACE SHALL BE COURSE BROOMED TRANSVERSE TO THE SLOPE. GROOVES/JOINTS ARE NOT TO BE INSTALLED IN THE RAMP SURFACE.

(B) THE MINIMUM THICKNESS OF RAMPS, SIDEWALKS AND LANDING AREAS SHALL BE 4 INCHES. CONCRETE TO BE MINIMUM 3000 p.s.i.. EXPOSED AGGREGATE CONCRETE SHALL NOT BE USED ON SURFACE RAMPS. WIRE REINFORCEMENT IS NOT REQUIRED IN RAMPS OR SIDEWALKS UNLESS SPECIFICALLY STATED IN DESIGN PLANS.

(C) THE MAXIMUM RAMP AND LANDING CROSS-SLOPE SHALL BE 2.0% UNLESS THE STREET GRADE EXCEEDS 2.0%, THEN THE CROSS-SLOPE OF THE RAMP SHALL MATCH THE STREET RUNNING GRADE. DO NOT PROVIDE TRANSITIONAL WARPS IN THE GUTTER, RAMP SURFACE OR LANDING AREA. THE STREET RUNNING GRADE IS MEASURED DIRECTLY IN FRONT OF THE RAMP WITH A 4 FOOT DIGITAL LEVEL AND IS THE GRADE OF THE STREET PERPENDICULAR TO THE RAMP RUNNING SLOPE WHERE THE ASPHALT ABUTS THE GUTTER.

(D) GUTTER SHALL NOT EXCEED 5.0% DIRECTLY IN FRONT OF A CURB RAMP. NO LIP OR VERTICLE SEPARATION SHALL BE INSTALLED BETWEEN THE GUTTER AND THE RAMP.

(E) THE MINIMUM RAMP WIDTH SHALL BE 4 FEET. A THREE FOOT WIDE RAMP IS ACCEPTABLE ONLY IN THE CASE OF AN OBSTRUCTION AND WITH PUBLIC WORKS WRITTEN APPROVAL. CURB RAMPS, SIDEWALKS, MEDIAN CUTS AND CROSSWALKS SHALL BE ALIGNED UNLESS NOT POSSIBLE TO AID IMPAIRED USERS.

(F) RAMP SIDE FLARES SHALL NOT EXCEED 10.0% RELATIVE TO THE STREET. (EXAMPLE: IF THE STREET SLOPE IS 5.0% THEN THE SIDE FLARE SLOPE MAY BE UP TO 15.0% ON THE LOW SIDE TO ALLOW THE THE FLARE TO MATCH CURB HEIGHT IN A REASONABLE DISTANCE. THE SIDE FLARE SLOPE ON THE HIGH SIDE OF THE RAMP WOULD REMAIN AT 10.0% OR LESS GRADE SINCE IT WILL MATCH CURB HEIGHT QUICKLY).

(G) A MINIMUM 3 FOOT LONG SIDEWALK TRANSITION SHALL BE PROVIDED WHEN MATCHING CURB RAMP/LEVEL LANDING TO EXISTING SIDEWALKS WITH CROSS SLOPE EXCEEDING 2.0%. ADDITIONAL TRANSITION LENGTH MAY BE REQUIRED WHEN MATCHING TO EXISTING SIDEWALK WITH SEVERE CROSS SLOPE.

(H) MEDIAN CUTS: SHALL BE 6 FEET WIDE FOR TWO-WAY PEDESTRIAN TRAFFIC ALIGNED WITH CROSSING. MEDIAN CUT CROSS SLOPE SHALL BE MAXIMUM 2.0% OR MATCH STREET GRADE WHEN ROADWAY SLOPE EXCEEDS 2.0%.

(I) RAMP LENGTH IS LIMITED TO 15 FEET.

GENERAL NOTES FOR DETECTABLE WARNING DEVICES

THE DETECTABLE WARNING DEVICE SHALL BE LOCATED SO THAT THE NEAREST EDGE OF THE DEVICE IS 6 TO 8 INCHES FROM THE FACE OF CURB.

TRUNCATED DOMES IN THE DETECTABLE WARNING SURFACE SHALL MEET THE REQUIREMENTS OF THE GEOMETRC CONFIGURATION SHOWN.

DOMES SHALL BE ALIGNED ON A SQUARE GRID IN THE PREDOMINENT DIRECTION OF TRAVEL TO PERMIT THE WHEELS TO ROLL BETWEEN DOMES.

DETECTABLE WARNING DEVICE SHALL BE 24 INCHES IN THE DIRECTION OF TRAVEL AND EXTEND THE FULL WIDTH OF THE CURB RAMP OR FLUSH SURFACE.

DETECTABLE WARNING DEVICE SHALL BE ON THE AHTD QUALIFIED PRODUCTS LIST FOR CAST-IN-PLACE TACTILE PANELS (ADA DETECTABLE WARNING).

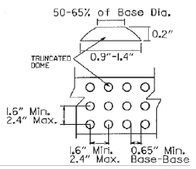

FIRST CHOICE	TYPE 1	CORNER LOCATIONS WITH WALK ADJACENT TO CURB BOTH NEW CONSTRUCTION AND ALTERATIONS
	TYPE 2	CORNER LOCATIONS WITH WALK OFFSET FROM CURB A DISTANCE INSUFFICIENT TO ALLOW REQUIRED RAMP SLOPE (BOTH NEW CONSTRUCTION AND ALTERATIONS)
	TYPE 3	CORNER LOCATIONS WITH WALK OFFSET FROM CURB A DISTANCE SUFFICIENT TO ALLOW REQUIRED RAMP SLOPE (BOTH NEW CONSTRUCTION AND ALTERATIONS)
	TYPE 4	TANGENT LOCATIONS (BOTH NEW CONSTRUCTION AND ALTERATIONS)
SECOND	TYPE 5	TANGENT LOCATIONS (ALTERATIONS ONLY)

TITLE	Issue Date	Revision Date
ACCESS RAMP TYPE 3 EXPANSION JOINT ALTERNATE 1	AUG. 2006	PW-51 APR 2015

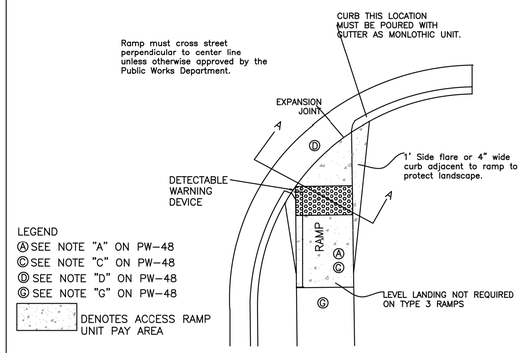

LEGEND
Ⓐ SEE NOTE "A" ON PW-48
Ⓒ SEE NOTE "C" ON PW-48
Ⓓ SEE NOTE "D" ON PW-48
Ⓖ SEE NOTE "G" ON PW-48
DENOTES ACCESS RAMP UNIT PAY AREA

TYPE 3 RAMP PLAN

EXPANSION JOINT ALTERNATE 1

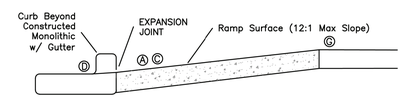

SECTION A–A

TITLE	Issue Date	Revision Date
ACCESS RAMP TYPE 3 EXPANSION JOINT ALTERNATE 2	AUG. 2006	PW-52 APR 2015

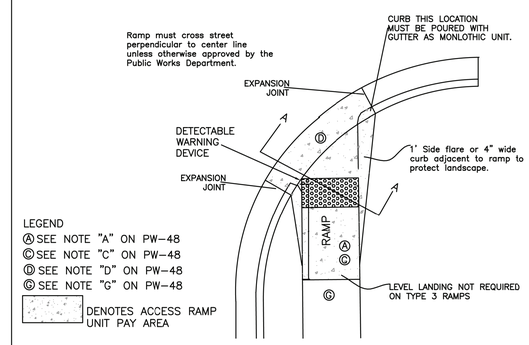

LEGEND
Ⓐ SEE NOTE "A" ON PW-48
Ⓒ SEE NOTE "C" ON PW-48
Ⓓ SEE NOTE "D" ON PW-48
Ⓖ SEE NOTE "G" ON PW-48
DENOTES ACCESS RAMP UNIT PAY AREA

TYPE 3 RAMP PLAN

EXPANSION JOINT ALTERNATE 2

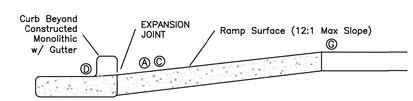

SECTION A–A

TITLE	Issue Date	Revision Date
SILT FENCE	AUG. 2006	PW-63 APR 2015

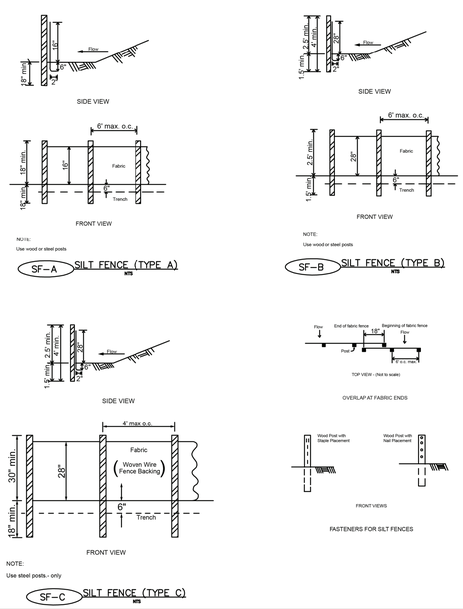

TITLE	Issue Date	Revision Date
SILT FENCE	AUG. 2006	PW-63 APR 2015

NOTES:
1. GEOTEXTILE FABRIC (TYPE 4) IN ACCORDANCE WITH SECTION 625 (AHTD SPECS).
2. TYPE A – USE ON SMALL DEVELOPMENTS WHERE THE LIFE OF THE PROJECT IS LESS THAN SIX MONTHS AND THE SLOPE GRADIENT IS LESS THAN 3:1.
3. TYPE B – USE ON DEVELOPMENTS WHERE THE LIFE OF THE PROJECT IS GREATER THAN SIX MONTHS AND WHERE THE SLOPE GRADIENT IS 3:1 OR GREATER.
4. TYPE C – USE WHERE SLOPES EXCEED A VERTICAL HEIGHT OF 20 FEET AND THE SLOPE GRADIENT IS STEEPER THEN 3:1.
5. INSPECT BARRIERS AT THE END OF EACH WORKING DAY, OR AFTER EACH RAIN, AND REPAIR OR CLEAN AS NECESSARY.
6. REMOVE SEDIMENT FROM BARRIER WHEN ONE HALF FULL.
7. DISPOSE OF SEDIMENT AND STABILIZE IT WITH VEGETATION.
8. REPLACE FILTER FABRIC WHEN DETERIORATED.
9. DESIGN LIFE OF A SYNTHETIC SILT FENCE IS APPROXIMATELY 6 MONTHS.
10. MAINTAIN UNTIL THE PROJECT IS VEGETATED OR OTHERWISE STABILIZED.
11. REMOVE BARRIERS AND ACCUMULATED SEDIMENT AND STABILIZE THE EXPOSED AREA WHEN THE PROJECT IS STABILIZED.
12. SILT FENCE SHALL BE INSTALLED ALONG THE CONTOUR, NEVER UP OR DOWN A SLOPE.
13. THE MAXIMUM DRAINAGE AREA FOR A CONTINUOUS FENCE WITHOUT BACKING SHALL BE 1/4 ACRE PER 100 LINEAR FEET OF FENCE LENGTH, UP TO A MAXIMUM AREA OF 2 ACRES. THE MAXIMUM SLOPE LENGTH BEHIND THE FENCE ON THE UPSLOPE SIDE SHOULD BE 110 FEET (AS MEASURED ALONG THE GROUND SURFACE).
14. THE MAXIMUM DRAINAGE AREA FOR A CONTINUOUS SILT FENCE WITH BACKING SHALL BE 1 ACRE PER 150 LINEAR FEET OF FENCE LENGTH. THE SLOPE LENGTH ABOVE THE SILT FENCE WITH BACKING SHOULD BE NO MORE THAN 300 FEET.

McCLELLAND CONSULTING ENGINEERS, INC.
DESIGNED TO SERVE
7302 KANIS ROAD
LITTLE ROCK, ARKANSAS 72204
PH: (501) 371-0272
HTTP://WWW.MCE.US.COM

STATE OF ARKANSAS LICENSED PROFESSIONAL ENGINEER No:18021 TAYLOR CLARK
2-20-25

JOB NO. 061757
JONESBORO DR. CHILDREN'S TRAIL (LITTLE ROCK) (S)
LITTLE ROCK, ARKANSAS

811 Know what's below. Call before you dig.

REVISIONS

REV	DATE	DESCRIPTION

STANDARD DETAILS III

DESIGNED BY: WTC	DRAWN BY: WTC
DATE: 1/23/25	REVISION:
SCALE: N.T.S.	JOB NUMBER: 22-5767

POWER, LIGHTING & SYSTEM LEGEND

- SITE LIGHT
- WALL SCONCE
- 2x4 FLUORESCENT LIGHT
- EL — FLUORESCENT LIGHT WITH EMERGENCY LIGHT (EL) BATTERY 1400 LUMENS MINIMUM FOR 2 LAMPS
- 2x2 FLUORESCENT LIGHT
- RECESSED LIGHT, UNLESS OTHERWISE SHOWN
- WALL MOUNTED LIGHT–MOUNTING HEIGHT AS INDICATED
- LED EXIT LIGHT, CEILING MOUNTED OR AS INDICATED, DARKENED AREA INDICATES FACE, ARROWS INDICATE DIRECTION OF EGRESS
- EMERGENCY EXIT LIGHT, WALL MOUNT 7'–6" A.F.F. OR AS NOTED
- 4 FT. STRIP FLUORESCENT LIGHT
- S — LIGHT SWITCH, MTD. 4'–0" A.F.F.
- S_2 — LIGHT SWITCH, 2 POLE, MTD 4'–0" A.F.F.
- S_3 — LIGHT SWITCH, 3–WAY, MTD. 4'–0" A.F.F.
- S_4 — LIGHT SWITCH, 4–WAY, MTD. 4'–0" A.F.F.
- S_P — LIGHT SWITCH WITH PILOT LIGHT, MTD. 4'–0" A.F.F.
- 20 AMP DUPLEX RECEPTACLE MTD. HORIZ. 6" ABOVE COUNTER TOP UNLESS OTHERWISE SHOWN
- 20 AMP DUPLEX RECEPTACLE MTD. 18" A.F.F., WITH #12 GROUND WIRE, GFCI INDICATES GROUND FAULT CIRCUIT INTERRUPTER, WP INDICATES WEATHERPROOF WHILE IN USE ENCLOSURE AND COVER
- SINGLE RECEPTACLE, RATINGS AS NOTED
- S_M — HP RATED TOGGLE SWITCH, 1 OR 2 POLES AS REQUIRED W/OVERLOADS
- OR — NON–FUSED DISCONNECT SWITCH, SIZE AS NOTED
- OR — COMBINATION DISCONNECT AND MOTOR STARTER, SIZE AS NOTED. FUSED TYPE SHOWN.
- F OR — FUSED DISCONNECT SWITCH, SIZE AS NOTED
- PUSHBUTTON STATION, NEMA 4X
- ELECTRICAL PANEL, SURFACE MOUNTED, 5'–6" TO TOP OF ENCLOSURE
- ELECTRICAL PANEL, RECESSED MOUNTED, 5'–6" TO TOP OT ENCLOSURE
- EQUIPMENT CABINET SIZE AS NOTED, RECESSED MOUNTED, 5'–6" TO TOP OF ENCLOSURE
- EQUIPMENT CABINET SIZE AS NOTED, SURFACE MOUNTED, 5'–6" TO TOP OF ENCLOSURE
- L–1 — HOME RUN TO PANEL, RECEPTACLES AND EQUIPMENT SHALL HAVE GREEN GROUND WIRE. NUMBER OF ARROWS INDICATES NUMBER OF PHASE CONDUCTORS, LETTER(S) INDICATE NAME OF PANEL, NUMBER(S) INDICATE CIRCUIT NUMBERS
- BRANCH CIRCUIT WITH PHASE, NEUTRAL, SWITCHED PHASE AND EQUIPMENT GROUNDING CONDUCTORS
- W — TELEPHONE OR DATA OUTLET, SINGLE GANG BOX MTD. 18" A.F.F. WITH 3/4"C STUB TO ABOVE LAY–IN CEILING. "W" INDICATES 4'–6" MTD. HEIGHT FOR WALL PHONE.
- 3/4" PLYWOOD TELEPHONE BACKBOARD, SIZE AS NOTED, MTD. 5'–6" TO TOP
- J — JUNCTION BOX 42 CUBIC INCH MINIMUM CAPACITY
- SD — SMOKE DETECTOR, WALL MTD.
- SD — SMOKE DETECTOR, CEILING MTD.
- F — FIRE ALARM PULL STATION MTD. 4'–0" A.F.F.
- F — FIRE ALARM PULL STATION MTD. 4'–0" A.F.F. AND HORN MTD. 7'–0" A.F.F.
- D — SMOKE DETECTOR, HVAC DUCT MTD.
- C — FIRE ALARM CHIME 7'–0" A.F.F.
- FS — SPRINKLER FLOW SWITCH
- FLOOR TELEPHONE OUTLET, CAST JUNCTION–BOX
- WALL TELEPHONE/DATA OUTLET
- S — DOOR SWITCH MOUNTED IN DOOR JAMB
- DOOR BUTTON WEATHER PROOF, 50" A.F.F.
- B — DOOR BUZZER MTD 7'–0" A.F.F.
- J OR MH — HANDHOLE OR MANHOLE REFER TO DETAIL
- CIRCUIT BREAKER, TRIP RATING SHOWN, 3–POLE UNLESS NOTED
- * — FUSE, CURRENT LIMITING, RATING AS SHOWN
- * * * — TRANSFORMER, RATINGS AS SHOWN
- M, 10 HP — ELECTRIC MOTOR, HORSEPOWER SHOWN
- * — MOTOR STARTER, SIZE AS SHOWN OR REQUIRED. FVNR UNLESS NOTED
- VARIABLE FREQUENCY DRIVE
- 4–4" — DUCT BANK, IDENTIFIER SHOWN. REFER TO DUCT BANK SCHEDULE FOR SIZE AND CONFIGURATION.
- 3/4" x 10' COPPER CLAD GROUND ROD
- SA — SURGE ARRESTOR
- G, * kW — GENERATOR
- ATS/BP/IS 3P400 — ATS
- WEATHERHEAD
- CABLE CONNECTION

LINE TYPES

- FURNISH + INSTALL
- EXISTING

GENERAL NOTE:

1. SOME SYMBOLS OR ABBREVIATIONS MAY APPEAR ON THIS SHEET AND NOT BE UTILIZED ON THE PROJECT.

2(3#8 + 1#8 + 1#10EG) 3/4" GRS

- CONDUIT TYPE (SEE ABBREVIATIONS) REFER TO SPECIFICATIONS IF NOT SHOWN
- CONDUIT SIZE
- GROUNDING (GROUND) CONDUCTOR, NUMBER AND SIZE
- GROUNDED (NEUTRAL) CONDUCTOR, NUMBER AND SIZE
- PHASE (HOT) CONDUCTOR, NUMBER AND SIZE
- NUMBER OF SETS

ABBREVIATIONS

A	AMP
ACU	AIR CONDITIONING UNIT
AFF	ABOVE FINISHED FLOOR
AIC	AMPS INTERRUPTING CAPACITY
AM	AMP–METER
ANN	ANNUNCIATOR
AP	AERIAL PRIMARY
AS	AERIAL SECONDARY
AUX	AUXILIARY
BFI	BLOWN FUSE INDICATOR
BKR	BREAKER
C	CONDUIT
CGRS	PVC COATED GALVANIZED RIGID STEEL
CKT	CIRCUIT
COM	COMMON
CONT	CONTINUOUS
CP	CONTROL PANEL
CPT	CONTROL POWER TRANSFORMER
CR	CONTROL RELAY
CS	CORD SET
CU	COEFFICIENT OF UTILIZATION
DEB	DIRECT EARTH BURIED
EC	EMPTY OR EMBEDDED CONDUIT
EF	EXHAUST FAN
EG	EQUIPMENT GROUND
EL	ELEVATION
EMT	ELECTRICAL METALLIC TUBING
ETM	ELASPED TIME METER
FA	FIRE ALARM
FAP	FIRE ALARM PANEL
FC	FAN COIL
FLR	FLOOR
FOC	FIBER OPTIC CABLE
FS	FLOAT SWITCH
FT	FEET
FVNR	FULL VOLTAGE NON–REVERSING STARTER
FVR	FULL VOLTAGE REVERSING STARTER
GFCI	GROUND FAULT CIRCUIT INTERRUPTER
GND	GROUND
GRS	GALVANIZED RIGID STEEL
HOA	HAND–OFF–AUTO
HP	HORSEPOWER OR HEAT PUMP
HR	HOUR
JB	JUNCTION BOX
kVA	KILOVOLT–AMPERE
kVAR	KILOVOLT–AMPERE, REACTIVE
kW	KILOWATT
LA	LIGHTNING ARRESTOR
L.O.	LUGS ONLY
LV	LOW VOLTAGE
MCB	MAIN CIRCUIT BREAKER
MCC	MOTOR CONTROL CENTER
MCP	MOTOR CIRCUIT PROTECTOR
MFR	MANUFACTURER
MIN	MINIMUM
MS	MOTOR STARTER
MTD	MOUNTED
NFDS	NON–FUSED DISCONNECT SWITCH
NTS	NOT TO SCALE
OC	ON CENTER
OH	OVERHEAD
OL	OVERLOAD
PB	PUSH BUTTON
PEC	PHOTO ELECTRIC CELL
PF	POWER FACTOR
PL	PILOT LIGHT
PMR	PHASE MONITOR RELAY
PNL	PANEL
PTT	PUSH–TO–TEST
PVC	SCHEDULE 40 POLYVINYL CONDUIT
RECPT	RECEPTACLE
RM	ROOM
RVAT	REDUCED VOLTAGE AUTO–TRANSFORMER STARTER
S	SECOND
SA	SURGE ARRESTER
SDBC	SOFT DRAWN BARE COPPER
SE	SERVICE ENTRANCE
SHT	SHEET
SN	SOLID NEUTRAL
SS	STAINLESS STEEL
STA	STATION
SW	SWITCH
TC	TIME CLOCK
TEL	TELEPHONE
TD	TIME DELAY
TDD	TIME DELAY ON DE–ENERGIZATION
TDE	TIME DELAY ON ENERGIZATION
TYP	TYPICAL
TVSS	TRANSIENT VOLTAGE SURGE SUPPRESSOR
UG	UNDER GROUND
UH	UNIT HEATER
UP	UNDERGROUND PRIMARY
US	UNDERGROUND SECONDARY
VA	VOLT–AMP
VFD	VARIABLE FREQUENCY DRIVE
VM	VOLT–METER
W	WATT OR WIRE
WH	WEATHER HEAD
WM	WATT METER
WP	WEATHERPROOF
W/	WITH
XMFR	TRANSFORMER

CONTROL SCHEMATIC LEGEND

- WIRING WITHIN PANEL
- WIRING TO FIELD DEVICE
- PUSHBUTTON SWITCH, NORMALLY OPEN
- PUSHBUTTON SWITCH, NORMALLY CLOSED
- SELECTOR SWITCH, NUMBER OF POSITIONS AND CONTACTS AS SHOWN
- RELAY CONTACT, NORMALLY OPEN
- RELAY CONTACT, NORMALLY CLOSED
- TIME DELAY CONTACT, CLOSE ON ENERGIZATION
- TIME DELAY CONTACT, OPEN ON ENERGIZATION
- TIME DELAY CONTACT, OPEN ON DE–ENERGIZATION
- TIME DELAY CONTACT, CLOSE ON DE–ENERGIZATION
- LEVEL SWITCH
- PRESSURE SWITCH
- LIMIT SWITCH CONTACT, NORMALLY OPEN
- LIMIT SWITCH CONTACT, NORMALLY CLOSED
- LIMIT SWITCH CONTACT, HELD OPEN
- LIMIT SWITCH CONTACT, HELD CLOSED
- RELAY COIL, "TR" INDICATES "TIMING RELAY"
- PILOT LIGHT; "A" INDICATES "AMBER LENS" "G" INDICATES "GREEN LENS" "R" INDICATES "RED LENS"
- SOLENOID
- ETM — ELAPSED TIME METER
- TERMINAL BLOCK
- ELECTRICAL CONNECTION
- FUSE, AMPERE RATING AS SHOWN OR REQUIRED "BFI" INDICATES "BLOWN FUSE INDICATOR" TYPE
- GROUND CONNECTION TO ENCLOSURE GROUND BAR

McCLELLAND CONSULTING ENGINEERS, INC.
DESIGNED TO SERVE
7302 KANIS RD.
LITTLE ROCK, ARKANSAS 72204
(501) 371-0272
HTTP://WWW.MCE.US.COM

STATE OF ARKANSAS REGISTERED PROFESSIONAL ENGINEER No. 10206 BRUCE W. BROWN 2-24-12-1

ORIGINAL SIGNATURE ON FILE

JOB NO. 061757
JONESBORO DR. CHILDREN'S TRAIL (LITTLE ROCK) (S)
LITTLE ROCK, ARKANSAS

811 Know what's below. Call before you dig.

REVISIONS

REV	DATE	DESCRIPTION

ELECTRICAL SITE PLAN

DESIGNED BY: BB	DRAWN BY: GF
DATE: DEC 2024	REVISION:
SCALE: AS SHOWN	JOB NUMBER: MCE-165

E1

GENERAL NOTES:

1. GENERAL NOTES SHALL APPLY TO ALL SUBSEQUENT ELECTRICAL SHEETS.

2. ALL ELECTRICAL WORK SHALL BE PERFORMED IN ACCORDANCE WITH NATIONAL ELECTRICAL CODE (NFPA 70, CURRENT EDITION), LIFE SAFETY CODE (NFPA 101, CURRENT EDITION), UNDERGROUND FACILITIES DAMAGE PREVENTION ACT (§14-271-101 ET SEQ.), AND LOCAL ELECTRICAL CODE.

3. PRIOR TO CONSTRUCTION, THE CONTRACTOR SHALL PROVIDE DOCUMENTATION TO THE PROJECT ENGINEER, TO ENSURE ARKANSAS STATE CODES (§17-28-101 ET SEQ. AND §20-31-101 ET SEQ.) ARE MET. THE DOCUMENTATION SHALL INCLUDE:
   (1) ELECTRICIANS' LICENSE INFORMATION AND EXPIRATION DATE
   (2) THE RATIO OF LICENSED-ELECTRICIAN-TO-APPRENTICE-ELECTRICIANS
   (3) PRINTED SEARCH RESULT OF LICENSED ELECTRICIANS FROM ARKANSAS DEPARTMENT OF LABOR ELECTRICIAN LICENSEE DIRECTORY (https://www.ark.org/labor/electrician/search/php)
   ALL LICENSES SHALL BE VALID AND CURRENT.

4. ANY EQUIPMENT OR APPURTENANCE THAT INTERFERES WITH THE PROPOSED CONSTRUCTION AND WHICH MAYBE THE PROPERTY OF UTILITY SERVICE ORGANIZATIONS SHALL BE MOVED BY THE OWNERS UNLESS OTHERWISE PROVIDED.

5. CONDUIT INSTALLED UNDER ROADWAY SURFACES SHALL BE INSTALLED BY A PUSHING OR BORING METHOD OR AS DIRECTED BY ENGINEER. PVC OR HDPE CONDUIT SHALL BE USED. PVC CONDUIT SHALL BE MARKED "DIR. BORING" OR "DIRECTIONAL BORING" AS PER NEC.

6. THE CONTRACTOR SHALL NOT ENGAGE IN EXCAVATION OR DEMOLITION ACTIVITIES WITHOUT HAVING FIRST NOTIFIED THE ARKANSAS ONE CALL CENTER IN ACCORDANCE WITH UNDERGROUND FACILITIES DAMAGE PREVENTION ACT. NOT ALL UTILITY COMPANIES ARE MEMBERS OF THE ARKANSAS ONE CALL SYSTEM. THE CONTRACTOR IS ADVISED TO CONTACT ALL NON-MEMBER UTILITIES AS WELL AS THE ONE CALL CENTER.

7. UNDERGROUND UTILITIES EXIST WITHIN AND ADJACENT TO THE LIMITS OF CONSTRUCTION. SOME UTILITIES MAY HAVE BEEN RELOCATED SINCE THE TIME OF DESIGN AND THE CONTRACTOR'S NOTICE TO PROCEED. THE CONTRACTOR SHALL CONTACT THE UTILITY COMPANIES INVOLVED AND VERIFY THE LOCATIONS OF UNDERGROUND UTILITIES. THE CONTRACTOR SHALL MAINTAIN THE UTILITY LOCATION MARKINGS UNTIL IT IS NO LONGER NECESSARY.

8. THE CONTRACTOR SHALL BE RESPONSIBLE FOR ALL COSTS OF REPAIR OR REPLACEMENT OF EXISTING UTILITIES DAMAGED DURING THE CONSTRUCTION.

9. PULL BOX LIDS SHALL CLOSE FLUSH WITHOUT PINCHING ANY CONDUCTORS. CONDUIT LENGTHS IN PULL BOXES SHALL BE SET ACCORDINGLY. ANY CONDUCTORS THAT HAVE BEEN DAMAGED BY PINCHING SHALL BE COMPLETELY REPLACED AT CONTRACTOR'S EXPENSE.

10. EACH LIGHT POLE SHALL BE BONDED TO EQUIPMENT GROUNDING CONDUCTOR PER NEC. SEE ARTICLES 250 AND 410.

11. ALL ELECTRICAL COMPONENTS SHALL BE UL LISTED.

12. ALL LUMINAIRE ASSEMBLIES SHALL HAVE A BUG RATING OF U0.

13. PULL CABLE SHALL BE MINIMUM 1/4" PULL NYLON OR POLYESTER ROPE, OR 1200 LBS PULL TAPE WHEN PULLING CONDUCTORS. STEEL CABLE OR FISH TAPE SHALL NOT BE USED. CONNECT PULLING DEVICES TO COPPER WIRE AND NOT TO JACKET. USE PULLING COMPOUND PER MANUFACTURER'S REQUIREMENTS. ALL BENDS SHALL NOT BE LESS THAN RECOMMENDED BY NEC FOR CONDUCTORS USED.

14. ALL PULL BOXES SHALL BE TYPE 2 HD UNLESS OTHERWISE INDICATED ON THE PLANS.

15. CONTRACTOR SHALL ATTACH A PERMANENT TAG OF RIGID PLASTIC OR NON-FERROUS METAL TO EACH CONDUIT AT PULLBOXES, POLE BASES, AND JUNCTION BOXES. TAGS SHALL BE EMBOSSED, STAMPED, OR ENGRAVED WITH LETTERS 1/4" OR GREATER IN HEIGHT AND SECURED TO THE CONDUIT WITH NYLON OR PLASTIC TIES. EACH TAG SHALL INDICATE THE END LOCATION OF CONDUIT RUN. THE COST OF THE TAGS SHALL BE SUBSIDIARY TO THE CONDUIT PAY ITEM.
   EXAMPLES FOR CONDUIT: SERVICE POINT TO PULL BOX 1(SP TO P-1.)
   PULL BOX 1 TO SERVICE POINT(P-1 TO SP)
   PULL BOX 1 TO PULL BOX 2(P-1 TO P-2)

16. CONDUIT BELL END FITTINGS SHALL BE INSTALLED ON ALL TERMINATING ENDS OF NON-METALLIC CONDUIT RUNS. THIS INCLUDES PULL BOXES AND POLE BASES. THE COST OF THE FITTINGS SHALL BE CONSIDERED SUBSIDIARY TO THE PAY ITEM. ALL NON-METALLIC CONDUIT SHALL USE LONG SWEEP 90 DEGREEE ELBOWS ON ALL CONDUIT BENDS.

CONTRACTOR SCOPE:

1. CONTRACTOR'S ELECTRICAL SCOPE OF WORK FOR THIS PROJECT SHALL INCLUDE:
   1.1. NEGOTIATION AND COORDINATION WITH ENTERGY TO PROVIDE NEW SINGLE PHASE SERVICE AS SHOWN IN PLANS.
   1.2. FURNISH AND INSTALL LIGHT POLE BASES, PULL BOXES, JUNCTION BOXES, CONDUIT, GROUNDING AND BONDING.
2. ALL POLES, LUMINAIRES, AND CONDUCTORS FOR LIGHTING SYSTEM WILL BE INSTALLED BY ENTERGY AT A LATER DATE, OUTSIDE OF THIS PROJECT.

LIGHTING NOTES:

1. UNLESS OTHERWISE INDICATED, PULL BOX SHALL BE INSTALLED WITHIN 5' OF POLE FOUNDATION.
2. ALL SPLICES SHALL BE WATERTIGHT AND UL-LISTED FOR CONTINUOUS USE IN SUBMERSIBLE INSTALLATIONS.
3. USE MINIMUM 1/4" PULL ROPE OR 1200 LBS. PULL TAPE WHEN PULLING CONDUCTORS.
4. E.G.C. SHALL BE EXOTHERMICALLY BONDED TO GROUND ROD.
5. CONDUCTORS SHALL CONTINUOUSLY RUN DIRECTLY FROM SERVICE POINTS TO ELECTRICAL DEVICES AND/OR PULL BOXES WITHOUT SPLICES BEING MADE IN THE CONDUIT.

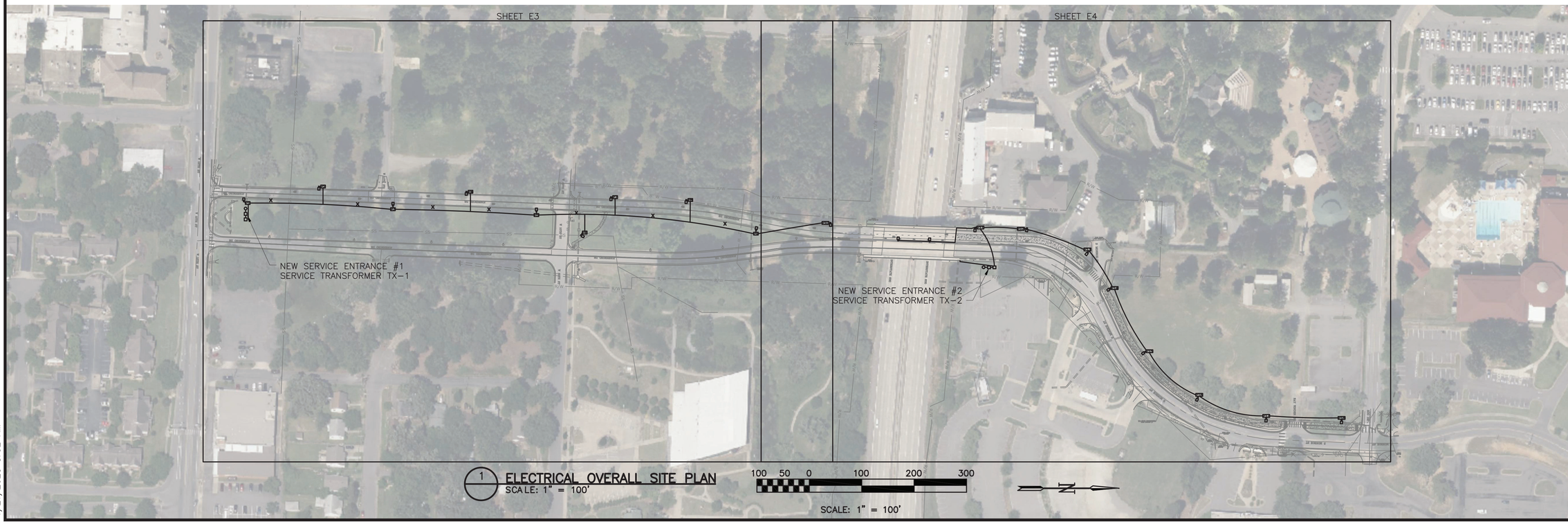

1 ELECTRICAL OVERALL SITE PLAN
SCALE: 1" = 100'

McCLELLAND CONSULTING ENGINEERS, INC.
DESIGNED TO SERVE
7302 KANIS RD.
LITTLE ROCK, ARKANSAS 72204
(501) 371-0272
HTTP://WWW.MCE.US.COM

STATE OF ARKANSAS REGISTERED PROFESSIONAL ENGINEER No. 10206 BRUCE W. BROWN 2-24-12-1

ORIGINAL SIGNATURE ON FILE

JOB NO. 061757
JONESBORO DR. CHILDREN'S TRAIL (LITTLE ROCK) (S)
LITTLE ROCK, ARKANSAS

811 Know what's below. Call before you dig.

REVISIONS

REV	DATE	DESCRIPTION

ELECTRICAL OVERALL SITE PLAN

DESIGNED BY: BB	DRAWN BY : GF
DATE: DEC 2024	REVISION:
SCALE: AS SHOWN	JOB NUMBER: MCE-165

E2

S:\PRODUCTION\PROJECTS\MCCLELLAND CONSULTING ENGINEERS (MCE)\MCE-165 JONESBORO TRAIL\DWG\E2_PROJECT OVERVIEW.DWG
1/21/2025 8:52 AM

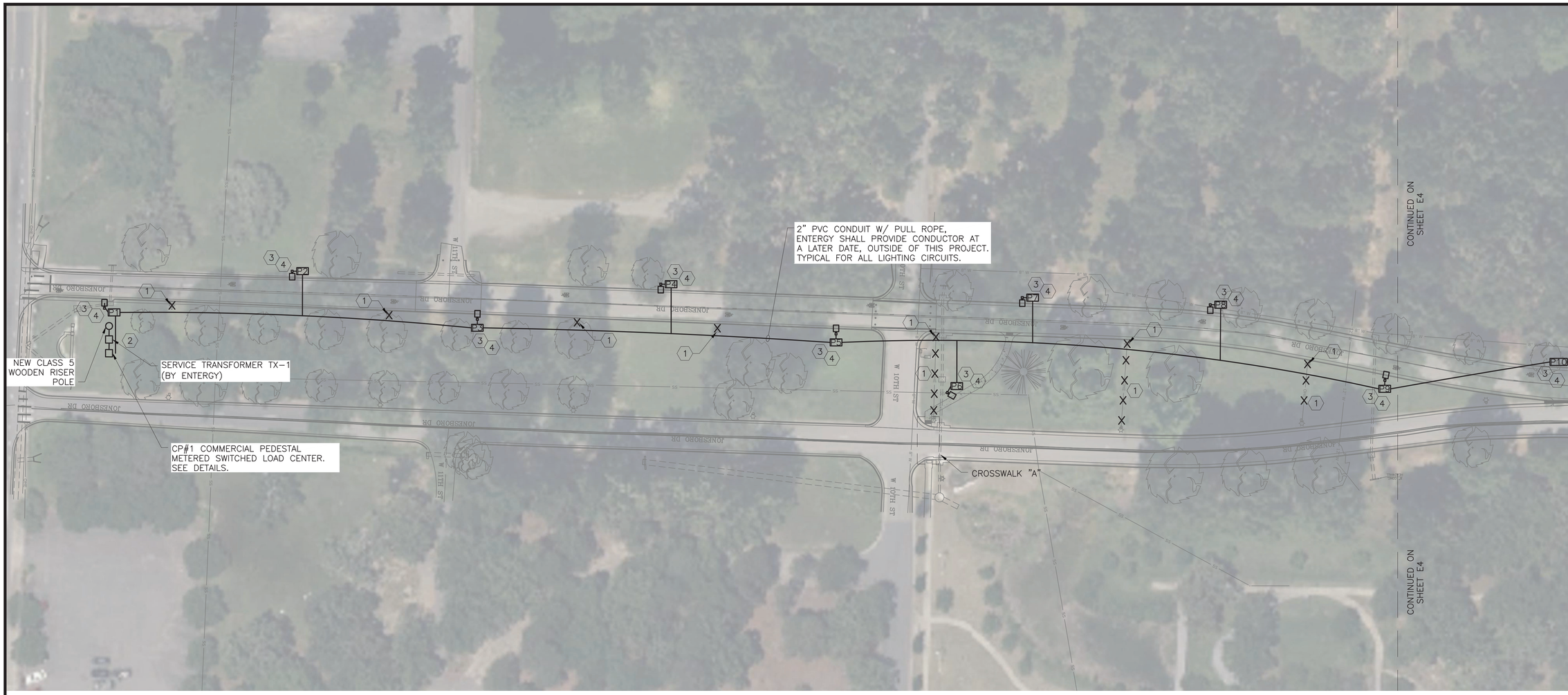

1 ELECTRICAL SITE PLAN I

SCALE: 1" = 40'

40 20 0 40 80 120

SCALE: 1" = 40'

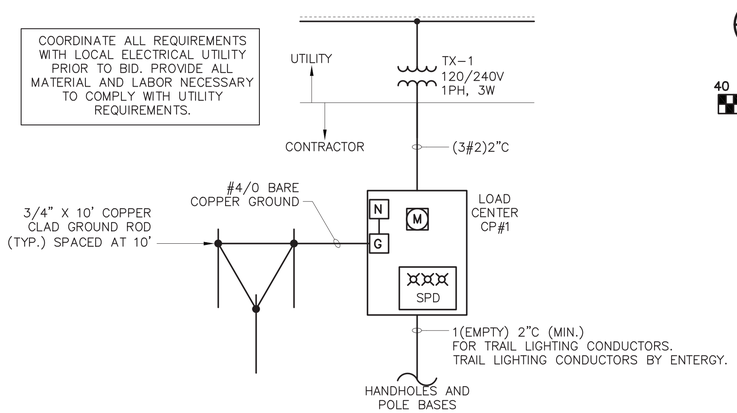

1 CP#1 ONE-LINE DIAGRAM

SCALE: NONE

GENERAL NOTES:

1. REFER TO NOTES ON SHEET E2, ALL NOTES APPLY TO THIS SHEET.
2. NON-METALLIC CONDUIT SHALL BE USED UNDERGROUND. GALVANIZED STEEL CONDUIT SHALL BE USED INSIDE CONCRETE, UNDER BRIDGES, AND WHERE IT MAY BE EXPOSED TO LIGHT. CONDUIT ROUTING IS SCHEMATIC IN NATURE.
3. REFER TO SHEET E6 LIGHTING CALCULATIONS.
4. REFER TO CIVIL SHEETS FOR STATION AND OFFSET FOR SERVICE ENTRANCE POINTS AND LIGHT POLE BASES.

KEYED NOTES:

1. CONTRACTOR SHALL COORDINATE WITH UTILITY TO DEMOLISH EXISTING LIGHT FIXTURE, POLE, HANDHOLE AND OVERHEAD CONDUCTORS AS SHOWN.
2. CONTRACTOR SHALL NEGOTIATE AND COORDINATE WITH ENTERGY TO PROVIDE NEW SINGLE PHASE ELECTRICAL SERVICE AS SHOWN. COORDINATE FINAL LOCATION WITH ENTERGY.
3. CONTRACTOR SHALL FURNISH AND INSTALL LIGHT POLE BASES. STUB CONDUIT UP, EXTENDING PAST FINISHED SURFACE OF POLE BASES, CAP CONDUIT ENDS FOR FUTURE LIGHTING CIRCUITS BY ENTERGY. ORIENTATE AND INSTALL ANCHOR BOLTS FOR FUTURE LIGHT POLES, POLES TO BE INSTALLED IN THE FUTURE. VERIFY ANCHOR BOLT REQUIREMENTS WITH POLE MANUFACTURER.
4. PULL BOX LOCATIONS ARE SCHEMATIC IN NATURE. COORDINATE FINAL PULL BOX LOCATIONS WITH POLE BASE, TRAIL, AND OTHER OBSTRUCTIONS AT EACH POLE LOCATION.

MCE DESIGNED TO SERVE
McCLELLAND CONSULTING ENGINEERS, INC.
7302 KANIS RD.
LITTLE ROCK, ARKANSAS 72204
(501) 371-0272
HTTP://WWW.MCE.US.COM

STATE OF ARKANSAS REGISTERED PROFESSIONAL ENGINEER No. 10206 BRUCE W. BROWN 12-12-24

ORIGINAL SIGNATURE ON FILE

JOB NO. 061757
JONESBORO DR. CHILDREN'S TRAIL (LITTLE ROCK) (S)
LITTLE ROCK, ARKANSAS

811 Know what's below. Call before you dig.

REVISIONS

REV	DATE	DESCRIPTION

ELECTRICAL LIGHTING PLAN I

DESIGNED BY: BB	DRAWN BY : GF
DATE: DEC 2024	REVISION:
SCALE: AS SHOWN	JOB NUMBER: MCE-165

E3

S:\PRODUCTION\PROJECTS\MCCLELLAND CONSULTING ENGINEERS (MCE)\MCE-165 JONESBORO TRAIL\DWG\E3_SITE PLAN I.DWG
12/20/2024 10:45 AM

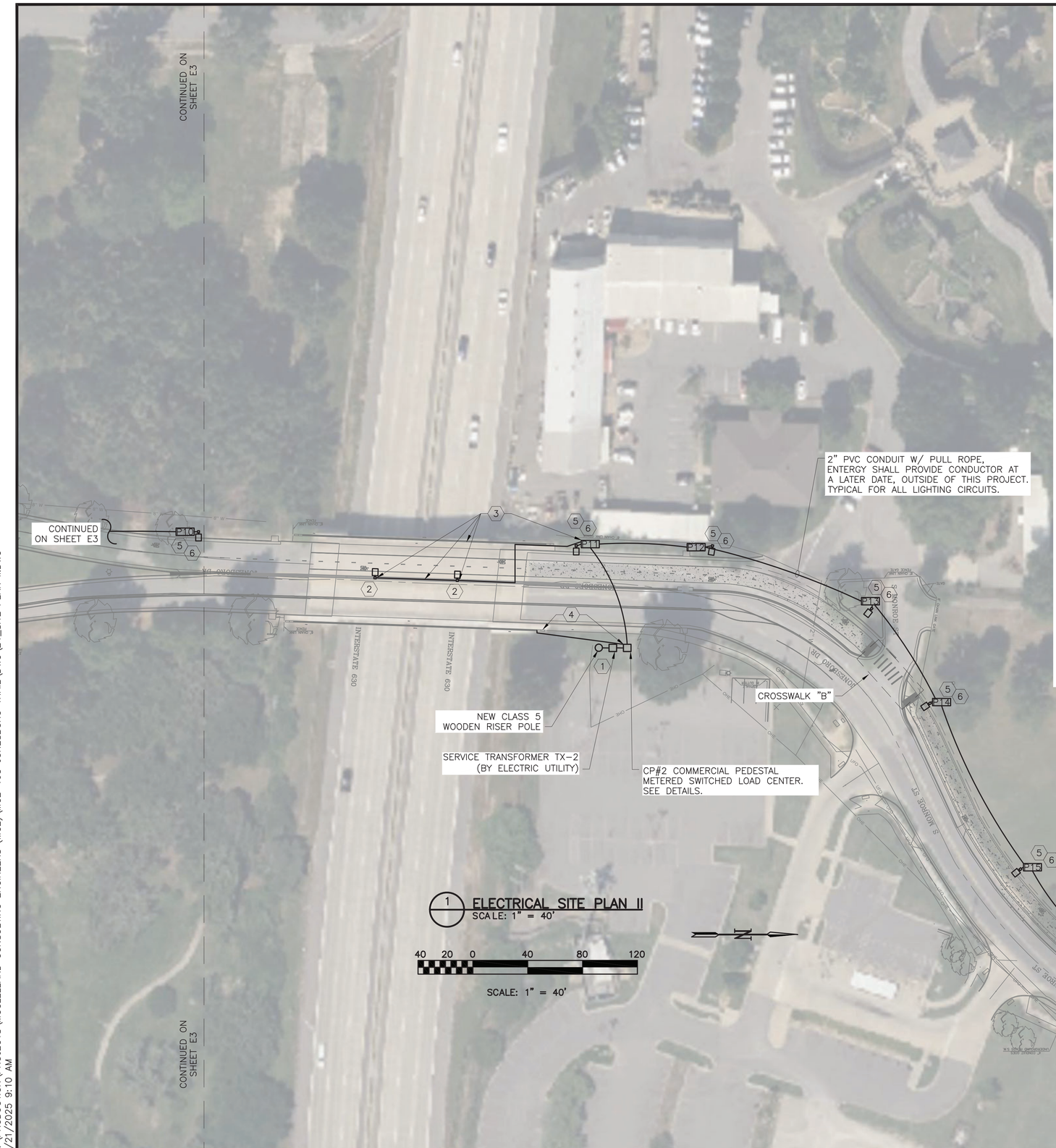

1 ELECTRICAL SITE PLAN II
SCALE: 1" = 40'

40 20 0 40 80 120
SCALE: 1" = 40'

GENERAL NOTES:

1. REFER TO SHEET E2 AND E3.

KEYED NOTES:

1. CONTRACTOR SHALL NEGOTIATE AND COORDINATE WITH ENTERGY TO PROVIDE NEW SINGLE PHASE ELECTRICAL SERVICE AS SHOWN. COORDINATE FINAL LOCATION WITH ENTERGY.
2. CONTRACTOR SHALL FURNISH AND INSTALL LIGHT POLE BASES, JUNCTION BOXES, AND CONDUIT FOR BRIDGE LIGHTING PER BRIDGE SHEETS. JUNCTION BOX AND LID MATERIAL SHALL BE NEMA 4X. PROVIDE 1/2" MIN. DIAMETER DRAINAGE HOLE NEAR THE BOTTOM OF THE JUNCTION BOX. SEE BRIDGE SHEETS FOR FURTHER INFORMATION.
3. CONTRACTOR SHALL BOND HANDRAILS AND JUNCTION BOXES PER NEC ARTICLE 250. ROUTE GROUNDING CONDUCTOR FROM GROUND ROD LOCATED PULL BOX P11 TO HANDRAILS AND JUNCTION BOXES. SEE BRIDGE SHEETS.
4. CONTRACTOR SHALL BOND HANDRAILS PER NEC ARTICLE 250. ROUTE GROUNDING CONDUCTOR FROM GROUND ROD LOCATED AT LOAD CENTER CP#2 TO HANDRAILS. SEE BRIDGE SHEETS.
5. CONTRACTOR SHALL FURNISH AND INSTALL LIGHT POLE BASES. STUB CONDUIT UP, EXTENDING PAST FINISHED SURFACE OF POLE BASES, CAP CONDUIT ENDS FOR FUTURE LIGHTING CIRCUITS BY ENTERGY. ORIENTATE AND INSTALL ANCHOR BOLTS FOR FUTURE LIGHT POLES, POLES TO BE INSTALED IN THE FUTURE. VERIFY ANCHOR BOLT REQUIREMENTS WITH POLE MANUFACTURER.
6. PULL BOX LOCATIONS ARE SCHEMATIC IN NATURE. COORDINATE FINAL PULL BOX LOCATIONS WITH POLE BASE, TRAIL, AND OTHER OBSTRUCTIONS AT EACH POLE LOCATION.

COORDINATE ALL REQUIREMENTS WITH LOCAL ELECTRICAL UTILITY PRIOR TO BID. PROVIDE ALL MATERIAL AND LABOR NECESSARY TO COMPLY WITH UTILITY REQUIREMENTS.

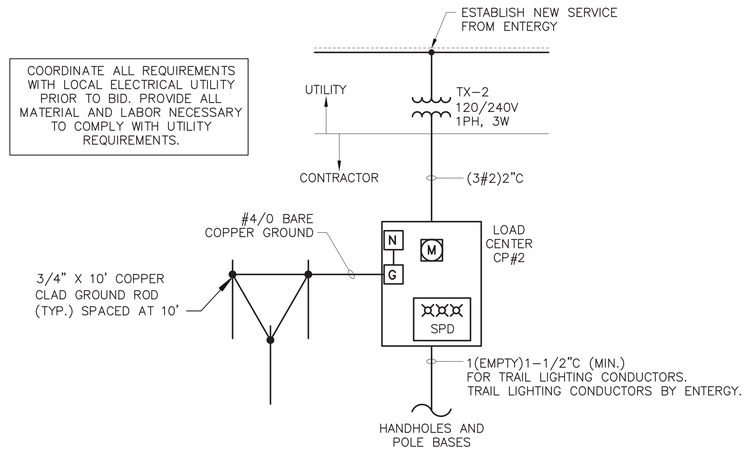

1 CP#2 ONE-LINE DIAGRAM
SCALE: NONE

McCLELLAND CONSULTING ENGINEERS, INC.
DESIGNED TO SERVE
7302 KANIS RD.
LITTLE ROCK, ARKANSAS 72204
(501) 371-0272
HTTP://WWW.MCE.US.COM

STATE OF ARKANSAS
REGISTERED PROFESSIONAL ENGINEER
No. 10206
BRUCE W. BROWN
24-12-1
ORIGINAL SIGNATURE ON FILE

JOB NO. 061757
JONESBORO DR. CHILDREN'S TRAIL (LITTLE ROCK) (S)
LITTLE ROCK, ARKANSAS

811 Know what's below. Call before you dig.

REVISIONS

REV	DATE	DESCRIPTION

ELECTRICAL SITE PLAN II

DESIGNED BY: BB	DRAWN BY : GF
DATE: DEC 2024	REVISION:
SCALE: AS SHOWN	JOB NUMBER: MCE-165

E4

S:\PRODUCTION\PROJECTS\MCCLELLAND CONSULTING ENGINEERS (MCE)\MCE-165 JONESBORO TRAIL\DWG\E4_SITE PLAN II.DWG
1/21/2025 9:10 AM

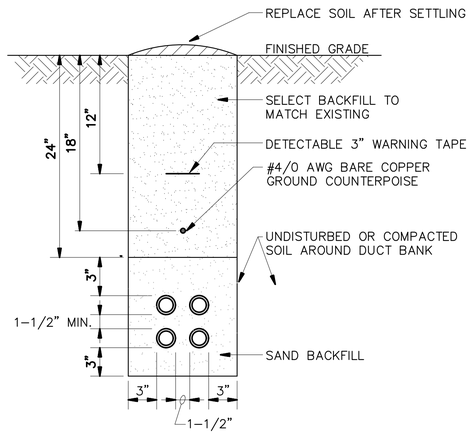

1 TRENCH DETAIL
SCALE: NONE

ELECTRICAL DUCT NOTES:

1. CONTRACTOR SHALL STAKE THE DUCT INSTALLATION IN PLAN AND ELEVATION FOR NEW ELECTRICAL DUCTS TO AVOID EXISTING UTILITIES.
2. CONTRACTOR SHALL ADJUST THE DEPTH OF THE ELECTRICAL DUCTS AS REQUIRED TO MAINTAIN THE MINIMUM COVER REQUIREMENT INDICATED AND AVOID EXISTING UTILITIES.
3. SIMILAR CONSTRUCTION FOR OTHER DUCT SIZES. SEE DUCT BANK SCHEDULE FOR QUANTITY AND SIZES.
4. INSTALL DUCT CONDUIT SUPPORTS AT 5'-0" O.C. MAXIMUM SPACING (TYPICAL ALL DUCTS).
5. OFFSETS AND BENDS OVER 10 DEGREES AND ELBOWS IN PVC CONDUIT RUNS SHALL BE GALVANIZED RIGID STEEL CONDUIT.
6. NO PVC SHALL EMERGE FROM THE GROUND OR CONCRETE SLAB OR ENCASEMENT, PVC SHALL CONVERT TO GALVANIZED RIGID STEEL CONDUIT PRIOR TO ITS EMERGENCE.
7. INSTALL GROUND RODS AT ENDS OF ELECTRICAL DUCT OR CONNECT TO GROUND RING BY EXOTHERMIC WELD.
8. INSTALL CONDUCTORS AND CABLES AS NOTED ON DRAWING. INSTALL PULLWIRE IN ALL SPARE DUCTS.
9. MINIMUM COVER REQUIREMENT FOR DUCT BANKS UNDER ROADS, DRIVEWAYS AND PARKING LOTS SHALL BE 24".
10. MINIMUM COVER REQUIREMENTS FOR ELECTRICAL SECONDARY SERVICE DUCT BANKS SHALL BE 30".
11. MINIMUM COVER REQUIREMENTS FOR ELECTRICAL PRIMARY SERVICE DUCT BANKS SHALL BE 36".

GENERAL NOTES:

1. POWER MARKING TAPES SHALL BE DETECTABLE TYPE CONSTRUCTION WITH RED BACKGROUND AND BLACK LETTERING.
2. COMMUNICATION MARKING TAPES SHALL BE DETECTABLE TYPE CONSTRUCTION WITH ORANGE BACKGROUND AND BLACK LETTERING, "TELEPHONE LINE" OR "FIBER OPTIC LINE" RESPECTIVELY.
3. TAPE SHALL BE DETECTABLE, DURABLE, HIGHLY VISIBLE, RESISTANT TO ELEMENTS, MEETING AND/OR EXCEEDING ALL INDUSTRY STANDARDS.

2 UNDERGROUND DETECTABLE WARNING TAPE
SCALE: NONE

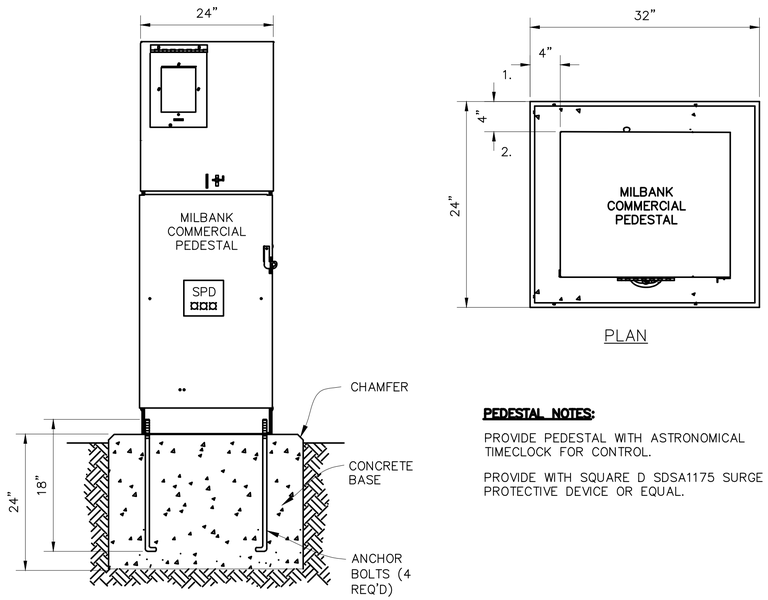

5 TYPICAL PEDESTAL MOUNTING DETAIL
SCALE: NONE

PEDESTAL NOTES:

PROVIDE PEDESTAL WITH ASTRONOMICAL TIMECLOCK FOR CONTROL.

PROVIDE WITH SQUARE D SDSA1175 SURGE PROTECTIVE DEVICE OR EQUAL.

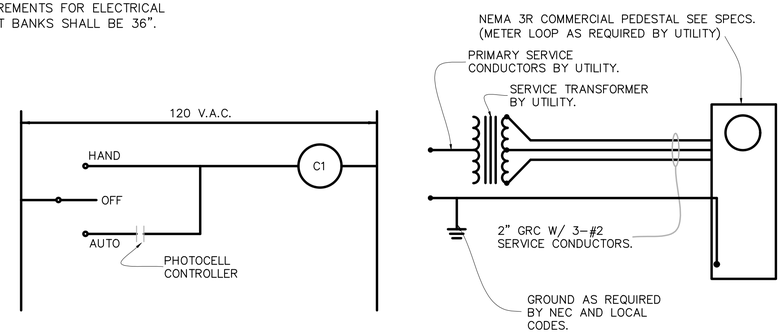

4 TYPICAL POWER SCHEMATIC
SCALE: NONE

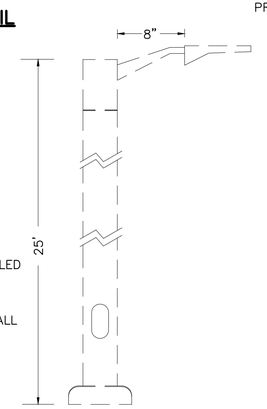

NOTES:

1. POLE AND LUMINAIRE TO BE INSTALLED BY ENTERGY AT A LATER DATE, OUTSIDE OF THIS PROJECT.
2. ENTERGY SHALL FURNISH AND INSTALL LUMINAIRE WITH 8" ARM.
3. BREAKAWAY BASE SHALL BE USED.

3 POLE DETAIL
SCALE: NONE

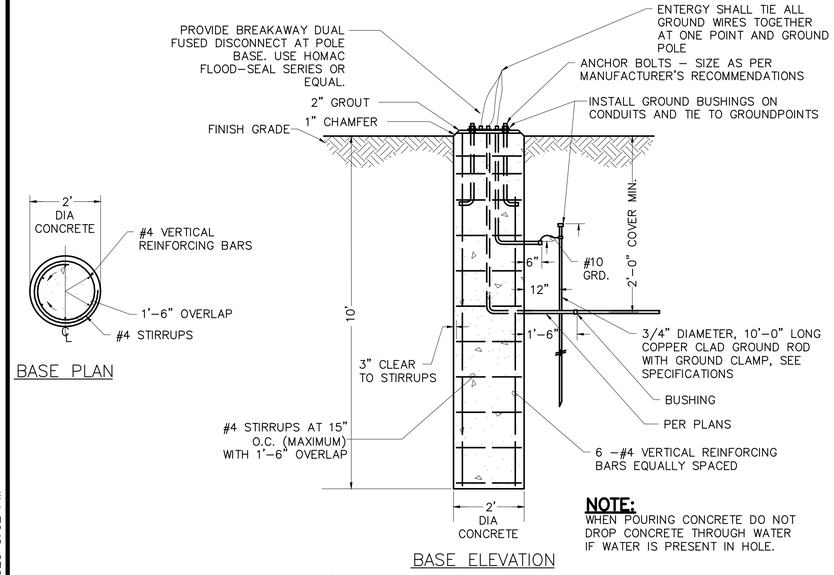

NOTE:
WHEN POURING CONCRETE DO NOT DROP CONCRETE THROUGH WATER IF WATER IS PRESENT IN HOLE.

6 LIGHT POLE BASE DETAILS
SCALE: N.T.S.

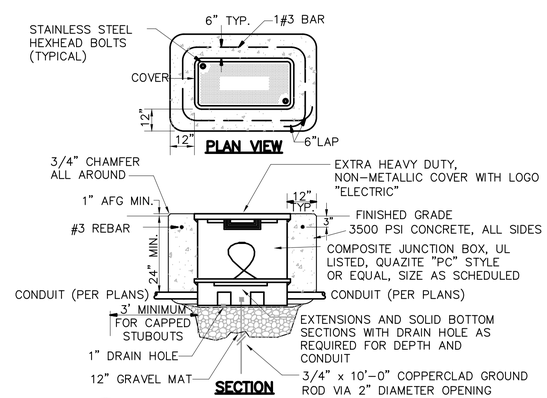

7 TYPICAL PULL BOX DETAIL
SCALE: NONE

PLAN SYMBOL P1

PULL BOX DETAIL NOTES:

1. PULL BOX AND EXTRA HEAVY-DUTY COVER SHALL BE DESIGNED FOR A TEST LOAD OF 22,550 LBS AND A DESIGN LOAD OF 15,000 LBS.
2. HANDHOLE INTERIOR DIMENSIONS SHALL BE 8.5"L x 6.5"W x 6"D.
3. PROVIDE MINIMUM 3' SLACK CABLE LOOP FOR EACH CABLE.
4. COLOR CODE, TAG AND IDENTIFY ALL CABLES IN HANDHOLE.
5. EXACT LOCATION OF EACH HANDHOLE SHALL BE APPROVED BY THE OWNER AND ENGINEER.

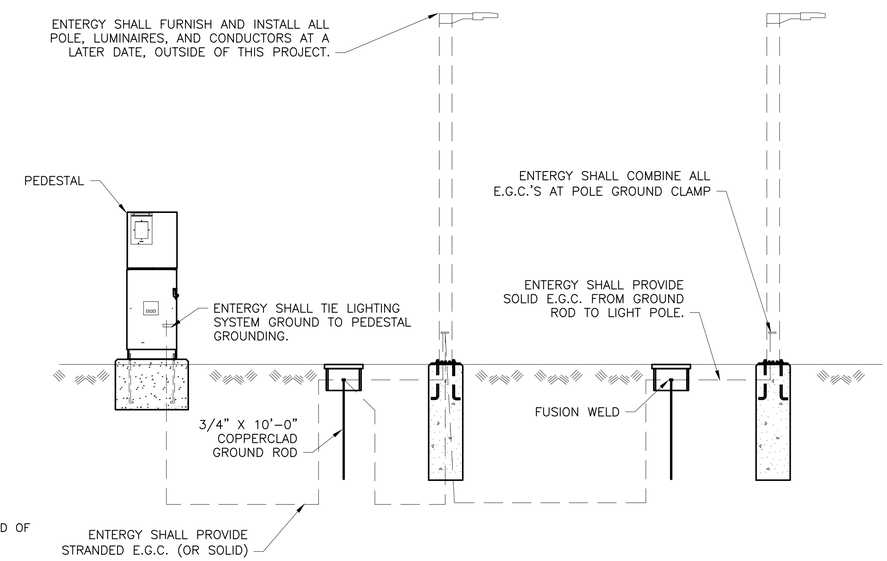

8 GROUNDING ARRAY DETAIL
SCALE: NONE

McCLELLAND CONSULTING ENGINEERS, INC.
DESIGNED TO SERVE
7302 KANIS RD.
LITTLE ROCK, ARKANSAS 72204
(501) 371-0272
HTTP://WWW.MCE.US.COM

STATE OF ARKANSAS REGISTERED PROFESSIONAL ENGINEER No. 10206 BRUCE W. BROWN 2024-12-1

ORIGINAL SIGNATURE ON FILE

JOB NO. 061757
JONESBORO DR. CHILDREN'S TRAIL (LITTLE ROCK) (S)
LITTLE ROCK, ARKANSAS

811 Know what's below. Call before you dig.

REVISIONS

REV	DATE	DESCRIPTION

ELECTRICAL DETAILS I

DESIGNED BY: BB	DRAWN BY : GF
DATE: DEC 2024	REVISION:
SCALE: AS SHOWN	JOB NUMBER: MCE-165

E5

P:\PRODUCTION\PROJECTS\MCCLELLAND CONSULTING ENGINEERS (MCE)\MCE-165 JONESBORO TRAIL\DWG\E5_ELECTRICAL DETAILS I.DWG
4/10/2025 3:02 PM

THESE TABLES PROVIDED FOR INFORMATION ONLY – NOT IN CONTRACT

LIGHTING -- FIXTURE SCHEDULE

MARK	MANUFACTURER	MODEL NUMBER	DESCRIPTION	LAMP TYPE	FIXTURE WATTAGE	VOLTAGE	POLE TYPE	MOUNTING	COMMENTS
A	AMERICAN ELECTRIC LIGHTING	ATB0 P304 R3 4K	TYPE 3 AUTOBAHN SMALL P304 PACKAGE ROADWAY FIXTURE	LED	124 W	240 V	POLE – SSP-4256-AX-M55EN	MOUNTING ASSEMBLY AS REQUIRED. 8" HORIZONTAL ARM FOR SQUARE POLE.	FURNISH AND INSTALL DUAL IN-LINE FUSE

NOTE:
1. ENTERGY SHALL INSTALL LIGHT POLES AND LUMINAIRES AT LATER DATE, OUTSIDE OF THIS PROJECT.
2. ENTERGY SHALL INSTALL LUMINAIRES WITH 8" ARM.

STATISTICS

DESCRIPTION	AVG	MAX	MIN	MAX/MIN	AVG/MIN
TRAIL	2.3 FC	3.9 FC	0.8 FC	4.9:1	2.9:1
TRAIL ENTRY	1.8 FC	3.2 FC	0.9 FC	3.6:1	2.0:1
CROSSWALK "A"	1.2 FC	1.7 FC	0.8 FC	2.1:1	1.5:1
CROSSWALK "B"	2.5 FC	2.6 FC	2.2 FC	1.2:1	1.1:1
CROSSWALK "C"	1.7 FC	1.8 FC	1.5 FC	1.2:1	1.1:1
CROSSWALK "D"	2.1 FC	2.4 FC	1.6 FC	1.5:1	1.3:1

NOTE:
DESIGN BASIS: AASHTO ROADWAY LIGHTING DESIGN GUIDE, 7TH ED. AND IES RP-8-18.

SINGLE PHASE VOLTAGE DROP SCHEDULE

SEGMENT	VOLTAGE	PHASE	SETS	CONDUCTOR	CURRENT	SEG AMP	Z/1000FT	LENGTH	VD	% VD
1	240	1	1	--	0.00	0.00	0.00	1150	0.00	0.00
2	240	1	1	--	0.00	0.00	0.00	1110	0.00	0.00
3	240	1	1	--	0.00	0.00	0.00	950	0.00	0.00
4	240	1	1	--	0.00	0.00	0.00	790	0.00	0.00
5	240	1	1	--	0.00	0.00	0.00	715	0.00	0.00
6	240	1	1	--	0.00	0.00	0.00	590	0.00	0.00
7	240	1	1	--	0.00	0.00	0.00	500	0.00	0.00
8	240	1	1	--	0.00	0.00	0.00	315	0.00	0.00
9	240	1	1	--	0.00	0.00	0.00	215	0.00	0.00
10	240	1	1	--	0.00	0.00	0.00	35	0.00	0.00
11	240	1	1	--	0.00	0.00	0.00	930	0.00	0.00
12	240	1	1	--	0.00	0.00	0.00	790	0.00	0.00
13	240	1	1	--	0.00	0.00	0.00	660	0.00	0.00
14	240	1	1	--	0.00	0.00	0.00	515	0.00	0.00
15	240	1	1	--	0.00	0.00	0.00	380	0.00	0.00
16	240	1	1	--	0.00	0.00	0.00	300	0.00	0.00
17	240	1	1	--	0.00	0.00	0.00	180	0.00	0.00
18	240	1	1	--	0.00	0.00	0.00	90	0.00	0.00
19	240	1	1	--	0.00	0.00	0.00	270	0.00	0.00
20	240	1	1	--	0.00	0.00	0.00	215	0.00	0.00
									TOTAL %VD	0.00

NOTE:
1. ENTERGY SHALL INSTALL CONDUCTOR AT LATER DATE, OUTSIDE OF THIS PROJECT.

CONDUIT FILL

CONDUIT SIZE	CONDUCTORS	CONDUIT FILL	MAX FILL
2"	--	0.00%	40.00%
2"	--	0.00%	40.00%
2"	--	0.00%	40.00%

NOTE:
1. ENTERGY SHALL INSTALL CONDUCTOR AT LATER DATE, OUTSIDE OF THIS PROJECT.

UN-SWITCHED LOAD CENTER #1 LAYOUT

VOLTS 120/240 ϕ 1 W 3 CAT. NO. MILBANK CP3B51110A22SL1, OR EQUAL.
MAIN: 100A LOCATION:
SOURCE: FROM METER
MOUNT: PEDESTAL BKR. SPACES 16 FEEDER AMPS 100A ENCLOSURE: NEMA 3R

LOAD DESCRIPTION	WIRE SIZE	CIR	BKR		BKR	CIR	WIRE SIZE	LOAD DESCRIPTION
M1 FROM METER (MAIN DISC.)	#2	1	2P		20	2	#12	PHOTOCELL CONTROL CIRCUIT
		3	100		20	8	#12	GFI DUPLEX OUTLET (LOCAL)
SPARE CIRCUIT BREAKER		5	2P		2P	4	#2	C1 TO SWITCHED LOAD CENTER
		7	60		60	6		
FUTURE SPACE		9			2P	10		SURGE ARRESTER DEVICE
FUTURE SPACE		11			60	12		
FUTURE SPACE		13				14		FUTURE SPACE
FUTURE SPACE		15				16		FUTURE SPACE

NOTE:
FURNISH AND INSTALL BREAKERS AS SHOWN.

SWITCHED LOAD CENTER #1 LAYOUT (CONTACTOR CONTROLLED)

VOLTS 120/240 ϕ 1 W 3 CAT. NO. MILBANK CP3B51110A22SL1, OR EQUAL.
LOCATION:
SOURCE FROM UN-SWITCHED LOAD CENTER
MOUNT: PEDESTAL BKR. SPACES 16 FEEDER AMPS 100A ENCLOSURE: NEMA 3R

LOAD DESCRIPTION	WIRE SIZE	CIR	BKR		BKR	CIR	WIRE SIZE	LOAD DESCRIPTION
POLE LIGHTS 1-10 (1240 VA)	#8	17	2P		2P	18		SPARE
		19	20		20	20		
SPARE		21	2P		2P	22		SPARE
		23	20		20	24		
FUTURE SPACE		25				26		FUTURE SPACE
FUTURE SPACE		27				28		FUTURE SPACE
FUTURE SPACE		29				30		FUTURE SPACE
FUTURE SPACE		31				32		FUTURE SPACE

NOTE:
FURNISH AND INSTALL BREAKERS AS SHOWN.
C1 LOAD

COMMERCIAL PEDESTAL #1

UN-SWITCHED LOAD CENTER #2 LAYOUT

VOLTS 120/240 ϕ 1 W 3 CAT. NO. MILBANK CP3B51110A22SL1, OR EQUAL.
MAIN: 100A LOCATION:
SOURCE: FROM METER
MOUNT: PEDESTAL BKR. SPACES 16 FEEDER AMPS 100A ENCLOSURE: NEMA 3R

LOAD DESCRIPTION	WIRE SIZE	CIR	BKR		BKR	CIR	WIRE SIZE	LOAD DESCRIPTION
M2 FROM METER (MAIN DISC.)	#2	1	2P		20	2	#12	PHOTOCELL CONTROL CIRCUIT
		3	100		20	8	#12	GFI DUPLEX OUTLET (LOCAL)
SPARE CIRCUIT BREAKER		5	2P		2P	4	#2	C2 TO SWITCHED LOAD CENTER
		7	60		60	6		
FUTURE SPACE		9			2P	10		SURGE ARRESTER DEVICE
FUTURE SPACE		11			60	12		
FUTURE SPACE		13				14		FUTURE SPACE
FUTURE SPACE		15				16		FUTURE SPACE

NOTE:
FURNISH AND INSTALL BREAKERS AS SHOWN.

SWITCHED LOAD CENTER #2 LAYOUT (CONTACTOR CONTROLLED)

VOLTS 120/240 ϕ 1 W 3 CAT. NO. MILBANK CP3B51110A22SL1, OR EQUAL.
LOCATION:
SOURCE FROM UN-SWITCHED LOAD CENTER
MOUNT: PEDESTAL BKR. SPACES 16 FEEDER AMPS 100A ENCLOSURE: NEMA 3R

LOAD DESCRIPTION	WIRE SIZE	CIR	BKR		BKR	CIR	WIRE SIZE	LOAD DESCRIPTION
POLE LIGHTS 11-20 (1240 VA)	#10	17	2P		2P	18		SPARE
		19	20		20	20		
SPARE		21	2P		2P	22		SPARE
		23	20		20	24		
FUTURE SPACE		25				26		FUTURE SPACE
FUTURE SPACE		27				28		FUTURE SPACE
FUTURE SPACE		29				30		FUTURE SPACE
FUTURE SPACE		31				32		FUTURE SPACE

NOTE:
FURNISH AND INSTALL BREAKERS AS SHOWN.
C2 LOAD

MCE McCLELLAND CONSULTING ENGINEERS, INC.
DESIGNED TO SERVE
7302 KANIS RD.
LITTLE ROCK, ARKANSAS 72204
(501) 371-0272
HTTP://WWW.MCE.US.COM

STATE OF ARKANSAS REGISTERED PROFESSIONAL ENGINEER No. 10206 BRUCE W. BROWN 2024-12-17

ORIGINAL SIGNATURE ON FILE

JOB NO. 061757
JONESBORO DR. CHILDREN'S TRAIL (LITTLE ROCK) (S)
LITTLE ROCK, ARKANSAS

811 Know what's below. Call before you dig.

REVISIONS

REV	DATE	DESCRIPTION

ELECTRICAL DETAILS II

DESIGNED BY: BB	DRAWN BY: GF
DATE: DEC 2024	REVISION:
SCALE: AS SHOWN	JOB NUMBER: MCE-165

E6

DATE REVISED	DATE FILMED	DATE REVISED	DATE FILMED	FED. ROAD DIST. NO.	STATE	FED. AID PROJ. NO.	SHEET NO.	TOTAL SHEETS
				6	ARK.			
				JOB NO.				
				1	JOINT REPAIR - 55064			

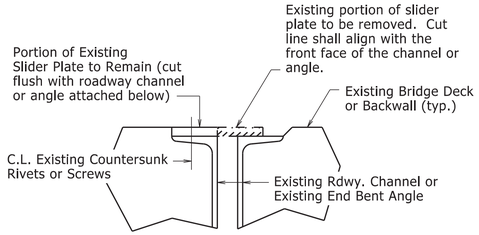

REMOVAL DETAILS AT EXISTING SLIDER PLATE JOINTS

At the direction of the Engineer, the portion of existing slider plate shown shall be removed and replaced with a new plate as shown in "SLIDER PLATE JOINT MODIFICATION". The portion of existing slider plate shall be removed and disposed of in accordance with Section 821. The cut face shall be ground square and flush with the face of the existing angle or channel. Removal and disposal of existing slider plate material will not be paid for directly, but shall be considered subsidiary to the item "Silicone Joint Sealant". Properly functioning slider plates need not be modified.

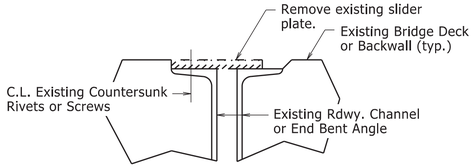

REMOVAL DETAILS AT EXISTING SLIDER PLATE JOINTS WITH GRADE RAISE

The existing slider plate shown shall be removed and replaced with new plates as shown in "JOINT MODIFICATION WITH GRADE RAISE". The existing slider plate shall be removed and disposed of in accordance with Section 821. Removal and disposal of existing slider plate material will not be paid for directly, but shall be considered subsidiary to the item "Silicone Joint Sealant".

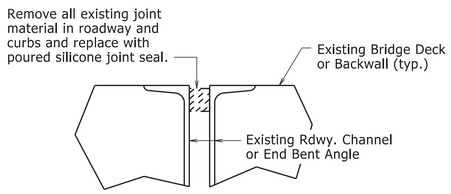

REMOVAL DETAILS AT EXISTING FILLED JOINTS

The existing joint material shall be removed and disposed of in accordance with Section 821. Removal and disposal of existing joint material will not be paid for directly, but shall be considered subsidiary to the item "Silicone Joint Sealant".

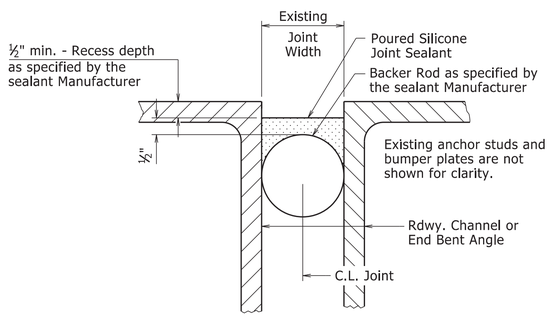

POURED SILICONE JOINT SEAL DETAILS

Existing Joint Seal shall be completely removed, backer rods placed, and Silicone Joint Sealant installed across the entire width of the bridge deck in accordance with these details, Section 809, and the Manufacturer's recommendations. Removal of existing Joint Seal will not be paid for directly, but shall be considered incidental to the item "Silicone Joint Sealant".

Backer rods shall be extended beyond the length of the poured joint in the initial joint repair area so that the two pieces can be properly spliced together prior to installing sealant for the adjacent joint repair. Manufacturer's recommendations shall be followed to prevent sealant leakage during repair work.

Backer rods shall be appropriately sized and set to the depth shown in the Manufacturer's literature based on the joint width at the time of sealing. Except as noted, do not install more backer rod than can be sealed in the same day. The Contractor shall verify separation of the backer rod from the joint material after joint material has set.

Backer rod shall be notched or otherwise fit around any existing seal supports or bumper plates to maintain its proper depth as defined above.

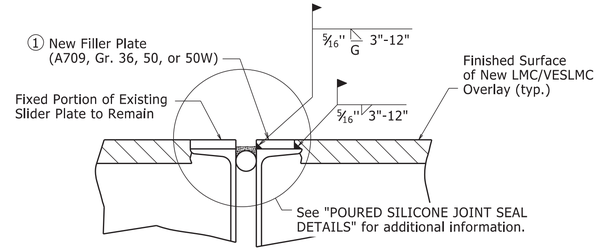

SLIDER PLATE JOINT MODIFICATION

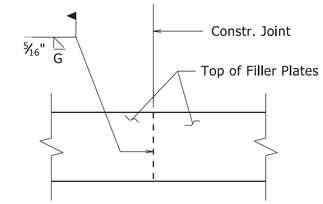

PLAN VIEW OF FILLER PLATE

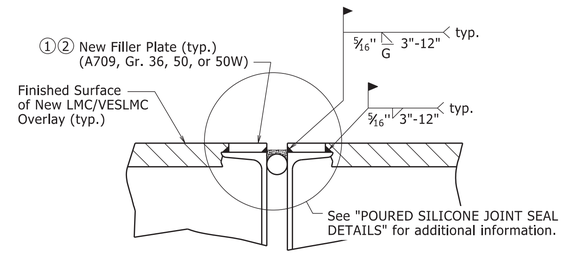

JOINT MODIFICATION WITH GRADE RAISE

① New field attached plates atop existing roadway channels or angles are required. The plate thickness shall be adjusted as necessary to match surface of finished surface of LMC/VESLMC Overlay and the width shall be ⅜" less than the existing channel flange or angle width to allow for fillet weld as shown.

All new Structural Steel shall be ASTM A709 (Gr. 36, 50, or 50W). The surfaces not in contact with concrete shall be cleaned and painted in accordance with Section 638. Only one coat of paint is required and shall be applied in the fabricator's shop. Grade 50W steel shall not be painted, but shall be cleaned in accordance with Subsection 807.84(e). Structural Steel and Painting will not be paid for directly, but shall be subsidiary to the item "Silicone Joint Sealant".

② Details shown are for an expansion joint where two bridge units meet. Eliminate filler plate on backwall and proceed with backwall repair in accordance with "BACKWALL REPAIR REMOVAL DETAIL" and "BACKWALL REPAIR INSTALLATION DETAIL" at end bents for bridge decks with grade raise, see Standard Drawing Number 55065.

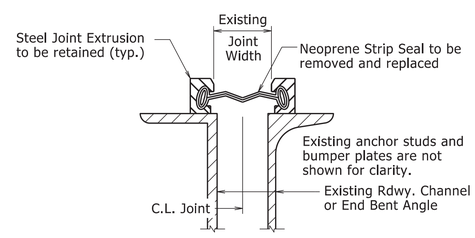

STRIP SEAL JOINT DETAILS

Existing neoprene strip seal joint material shall be completely removed and new neoprene strip seal joint material shall be installed across the entire width of the steel extrusions in accordance with these details, Section 809, and the Manufacturer's recommendations. Prior to installing the new joint material, the Contractor shall clean the steel extrusion at the Engineer's direction and in accordance with the new strip seal joint material Manufacturer's recommendations.

Removal and replacement of the existing neoprene strip seal joint material will require the removal of the parapet slider plates, where present. Parapet slider plates removed for this work shall be reinstalled after installation of the new neoprene strip seal joint material.

The new neoprene strip seal joint material shall provide a movement rating of four inches. The repaired expansion joint shall be capable of sealing the deck surface and parapet area to prevent moisture and other contaminants from descending through the joint.

All work and material associated with removing the existing joint material, cleaning the extrusions, removal and reinstallation of parapet slider plates, and installation of new joint material shall be paid for under the item "Modification of Existing Bridge Structure (Bridge No. _)".

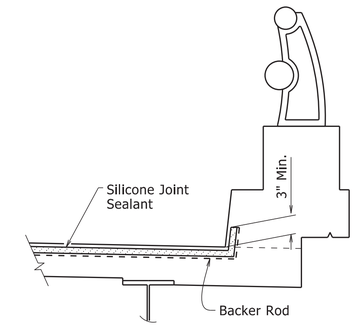

SILICONE JOINT SEAL PLACEMENT AT CURB

Vertical joints may require forming. The clearance from deck surface to joint material shall be maintained.

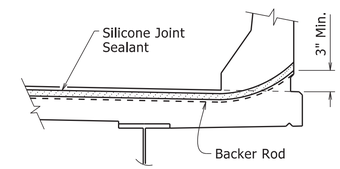

SILICONE JOINT SEAL PLACEMENT AT RAIL

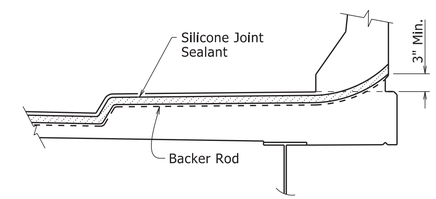

SILICONE JOINT SEAL PLACEMENT AT SIDEWALK

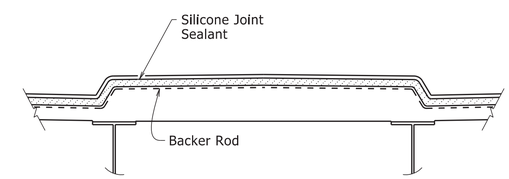

SILICONE JOINT SEAL PLACEMENT AT MEDIAN

STATE OF ARKANSAS
LICENSED PROFESSIONAL ENGINEER
No. 17472
TRAVIS MICHAEL RAPP
1/22/2025

BRIDGE ENGINEER

STANDARD DETAILS FOR JOINT REPAIRS & MODIFICATIONS

ARKANSAS STATE HIGHWAY COMMISSION

LITTLE ROCK, ARK.

DRAWN BY:	KWY	DATE:	11/7/2019	FILENAME:	b55064.dgn
CHECKED BY:	SWP	DATE:	11/7/2019	SCALE:	None
DESIGNED BY:	STD.	DATE:	-------		

DRAWING NO. 55064

PRINT DATE: 11/4/2020

NOTES:
1. REFER TO THE STRIPING DETAILS FOR PAVEMENT MARKING LINE WIDTHS.
2. THIS DRAWING SHALL BE USED IN CONJUNCTION WITH THE LATEST REVISED ADDITION OF THE "MANUAL ON UNIFORM TRAFFIC CONTROL DEVICES."
3. RAISED PAVEMENT MARKERS SHALL BE PLACED ON AN 80 FEET SPACING UNLESS OTHERWISE SHOWN IN THE PLANS.

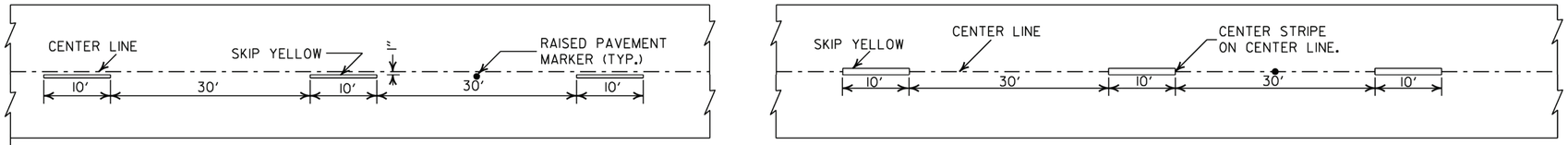

CONCRETE PAVEMENT

ASPHALT PAVEMENT

BROKEN LINE STRIPING

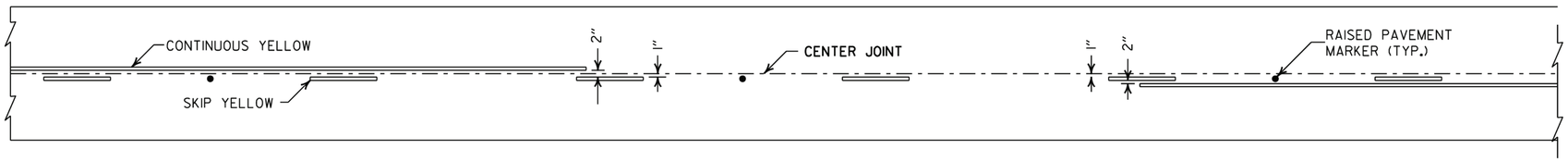

SOLID LINE STRIPING ON CONCRETE PAVEMENT

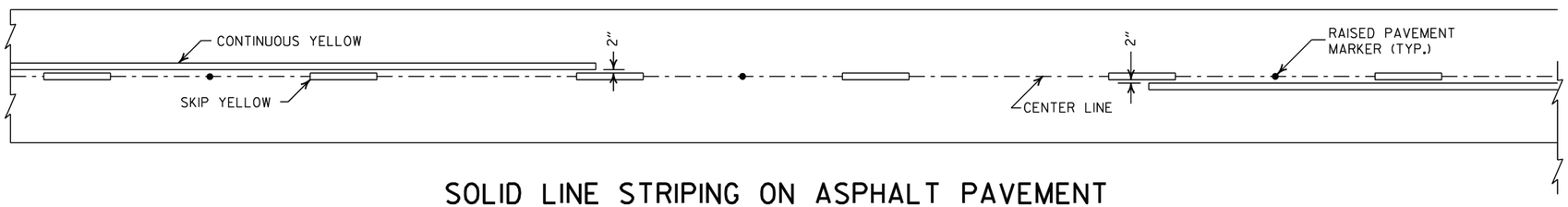

SOLID LINE STRIPING ON ASPHALT PAVEMENT

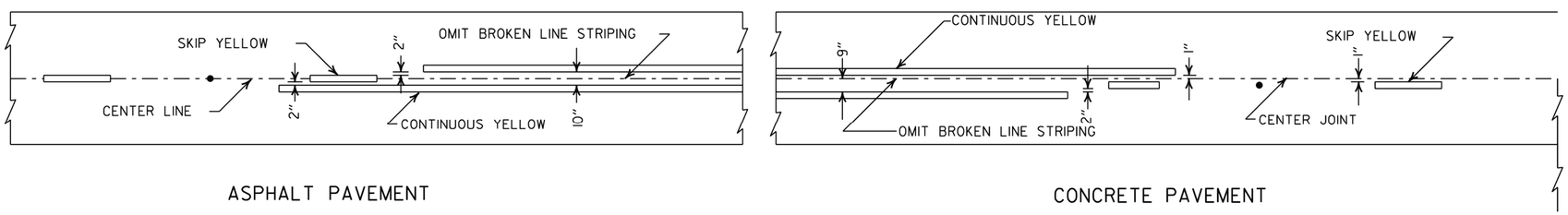

ASPHALT PAVEMENT

CONCRETE PAVEMENT

STRIPING AT ADJACENT NO PASSING LANES

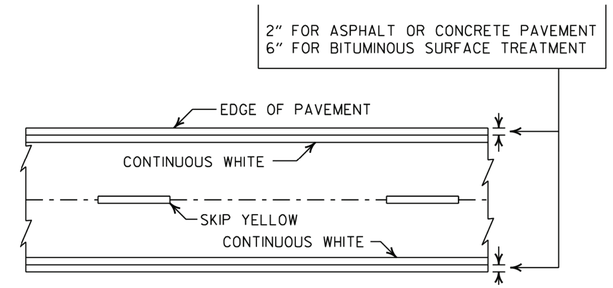

PAVEMENT EDGE LINE MARKING

NOTE:
THE RED LENS OF THE TYPE II R.P.M. SHALL FACE THE INCORRECT TRAFFIC MOVEMENT.

NOTE:
DIMENSIONS SHOWN FOR RAISED PAVEMENT MARKERS ARE TYPICAL. THE CONTRACTOR MAY SUBSTITUTE SIMILAR MARKERS WITH THE APPROVAL OF THE ENGINEER. REQUESTING APPROVAL FOR SIMILAR MARKERS MAY BE MADE BY REFERRING TO THE ARDOT QUALIFIED PRODUCTS LIST.

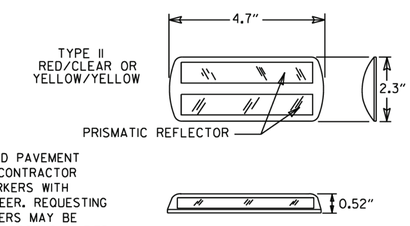

DETAIL OF STANDARD RAISED PAVEMENT MARKERS

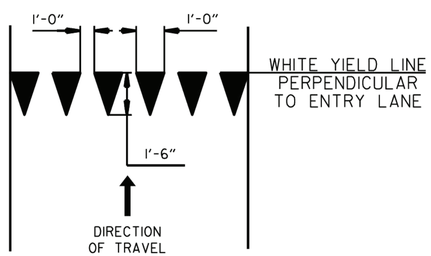

YIELD LINE DETAIL

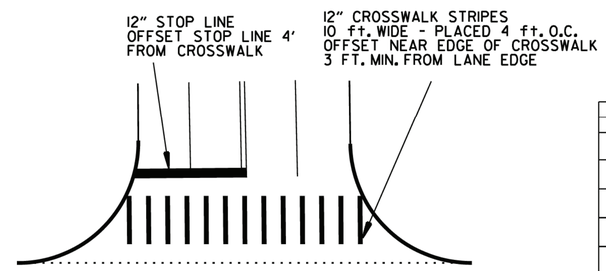

CROSSWALK AND STOP LINE DETAILS

DATE	REVISION	FILMED
2-27-20	REVISED STOP LINE DETAILS	
6-1-17	ADDED YIELD LINE DETAIL	
5-12-16	REVISED LINE WIDTHS, SPACING, & NOTES	
9-12-13	REVISED DETAIL OF STANDARD RAISED PAVEMENT MARKERS	
11-17-10	REVISED GENERAL NOTES & REMOVED PLOWABLE PVMT MRKRS	
11-18-04	REVISED NOTE 2 & GENERAL NOTES	
8-22-02	ADDED CROSSWALK & STOPBAR DTLS.	
7-02-98	ADDED DETAILS OF STD. RAISED PAV'T. MARKERS	
4-26-96	REV. NOTES 3&4; ADDED R.P.M.	
9-30-80	DRAWN	1-9-30-80

ARKANSAS STATE HIGHWAY COMMISSION

PAVEMENT MARKING DETAILS

STANDARD DRAWING PM-1

R1-1

STANDARD 30"X30"
EXPRESSWAY 36"X36"
SPECIAL 48"X48"

R1-2

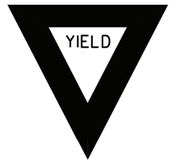

STD. 36"X36"X36"
EXPWY. 48"X48"X48"
FWY. 60"X60"X60"

R2-1

STD. 24"X30"
EXPWY. 36"X48"
FWY. 48"X60"

W3-5

STD. 36"X36"
EXPWY. 48"X48"
FWY. 48"X48"

W3-5a

STD. 36"X36"
EXPWY. 48"X48"
FWY. 48"X48"

R4-1

STD. 24"X30"
EXPWY. 36"X48"
FWY. 48"X60"

R4-2

STD. 24"X30"
EXPWY. 36"X48"
FWY. 48"X60"

R5-1

STD. 30"X30"
EXPWY. 36"X36"
SPECIAL 48"X48"

R11-2

48"X30"

R11-3A

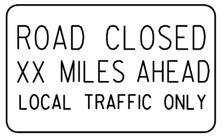

60"X30"

R11-4

60"X30"

W21-5a

STD. 36"X36"
FWY. 48"X48"

W1-1

STD. 36"X36"
FWY. 48"X48"

W1-2

STD. 36"X36"
FWY. 48"X48"

W1-3

STD. 48"X48"

W1-4

STD. 48"X48"

W1-6

STD. 48"X24"
SPECIAL 60"X30"

W1-8

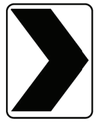

STD. 18"X24"
SPECIAL 24"X30"
EXPWY. 30"X36"
FWY. 36"X48"

W3-1

STD. 36"X36"
SPECIAL 48"X48"

W3-2

STD. 36"X36"
SPECIAL 48"X48"

W4-2

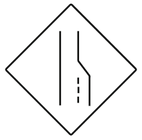

STD. 36"X36"
FWY. 48"X48"

W5-1

STD. 36"X36"
SPECIAL 48"X48"

W6-3

EXPWY. 36"X36"
SPECIAL 48"X48"

W8-7

EXPWY. 36"X36"
FWY. 48"X48"

W9-2

STD. 36"X36"
FWY. 48"X48"

W13-1

STD. 24"X24"

W20-1

STD. 48"X48"

W20-2

STD. 48"X48"

W20-3

STD. 48"X48"

W20-4

STD. 48"X48"

W20-5

STD. 48"X48"

W20-7a

STD. 36"X36"
FWY. 48"X48"

W21-2

STD. 30"X30"
SPECIAL 36"X36"

W21-5

STD. 30"X30"
SPECIAL 36"X36"

W24-1

STD. 36"X36"

W1-4b

STD. 48"X48"

R56-1

STD. 18"X18"

W8-11

STD. 36"X36"
FWY. 48"X48"

W8-9

STD. 36"X36"
FWY. 48"X48"

G20-1

60"X24"

G20-2

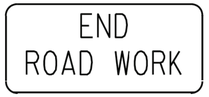

48"X24"

OM-3L OM-3R

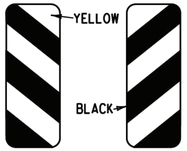

12"X36"

M4-9

STD. 30"X24"
SPECIAL 48"X36"
SPECIAL 60"X48"

M4-10

48"X18"

R55-1

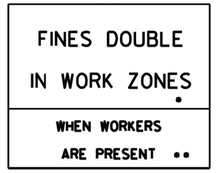

36"X60"

• USE 6" C LETTERS
•• USE 4" D LETTERS

ADVANCE DISTANCES
(XXXX)

500 FT	½ MILE
1000 FT	¾ MILE
1500 FT	1 MILE
	AHEAD

GENERAL NOTES:

1. ALL TRAFFIC CONTROL DEVICES USED ON ROAD CONSTRUCTION SHALL CONFORM TO THE MANUAL ON UNIFORM TRAFFIC CONTROL DEVICES, LATEST EDITION, AND TO THE STANDARD HIGHWAY SIGNS, LATEST EDITION, OR AS APPROVED BY THE FEDERAL HIGHWAY ADMINISTRATION.
2. TRAFFIC CONTROL DEVICES SHALL BE SET UP JUST BEFORE THE START OF CONSTRUCTION OPERATIONS AND SHALL BE PROPERLY MAINTAINED DURING THE TIME SUCH CONDITIONS EXIST. THEY SHALL REMAIN IN PLACE ONLY AS LONG AS NEEDED AND REMOVED THEREAFTER.
3. EXISTING SIGNS AND CONSTRUCTION SIGNS SHALL BE KEPT IN PROPER POSITION, AND BE CLEAN AND LEGIBLE AT ALL TIMES. SIGNS THAT DO NOT APPLY TO EXISTING CONDITIONS SHALL BE REMOVED. SIGNS THAT ARE DAMAGED, DEFACED, OR THAT ACCUMULATE DIRT DURING CONSTRUCTION SHALL BE CLEANED, REPAIRED, OR REPLACED.
4. • SIGNS ARE USUALLY MOUNTED ON A SINGLE POST, ALTHOUGH THOSE WIDER THAN 36" OR LARGER THAN 10 SQ. FT. SHALL BE MOUNTED ON TWO POSTS OR ABOVE A TYPE III BARRICADE.
5. • SIGN POSTS DIRECT BURIED IN SOIL SHALL BE 2 LB. MINIMUM CHANNEL POST OR 4"x4" WOOD POSTS. CHANNEL POSTS SHALL BE PAINTED GREEN. WOOD POSTS SHALL BE PAINTED WHITE. ALL POSTS SHALL BE NEATLY CONSTRUCTED, AND SHALL BE REPLUMBED, CLEANED, OR REPAIRED AS NEEDED FOR THE DURATION OF THE JOB. THERE SHALL NOT BE MORE THAN 2 POSTS IN A 7' PATH FOR WOOD OR CHANNEL POSTS. ANY CHANNEL POST SPLICE SHALL BE IN ACCORDANCE WITH STANDARD DRAWING TC-3.
6. POST MOUNTED SIGNS IN RURAL AREAS SHALL BE CONSTRUCTED WITH THE NEAR EDGE OF THE SIGN FROM 6 TO 12 FEET FROM THE PAVEMENT EDGE. SIGNS IN URBAN AREAS AND BARRICADE MOUNTED SIGNS SHALL BE MOUNTED A MINIMUM OF 2 FEET FROM THE PAVEMENT EDGE.
7. ALL POST AND BARRICADE MOUNTED SIGNS MOUNTED IN URBAN AREAS SHALL BE MOUNTED A MINIMUM DISTANCE OF 7' FROM THE BOTTOM OF THE SIGN TO THE ROADWAY SURFACE. ALL POST AND BARRICADE MOUNTED SIGNS MOUNTED IN RURAL AREAS SHALL BE MOUNTED A MINIMUM DISTANCE OF 7' FROM THE BOTTOM OF THE SIGN TO THE ROADWAY SURFACE, EXCEPT A MINIMUM OF 6' SHALL BE USED WHEN MOUNTING AN ADVISORY SIGN BELOW A WARNING SIGN. TEMPORARY SIGNS MAY BE MOUNTED ON PORTABLE SUPPORTS FOR INTERMEDIATE TERM STATIONARY WORK CONDITIONS. THE SIGNS MINIMUM MOUNTING HEIGHT SHALL BE 5'. RETROREFLECTIVE DEVICES SHALL BE USED. TEMPORARY SIGNS MAY BE MOUNTED ON PORTABLE SUPPORTS FOR SHORT-TERM, SHORT DURATION, AND MOBILE CONDITIONS. THEY SHALL BE NO LESS THAN ONE (1) FOOT ABOVE THE TRAVELED WAY. LONG-TERM STATIONARY SIGNS SHALL BE DIRECT BURIED IN SOIL, UNLESS CONDITIONS NECESSITATE THE USE OF PORTABLE SIGNS, OR AS APPROVED BY THE ENGINEER. CONCRETE PADS, CONCRETE OR ROCK BALLAST, OR OTHER SOLID MATERIALS SHALL NOT BE UTILIZED WITH PORTABLE SIGN SUPPORTS.
8. FLAGGERS SHALL USE REFLECTORIZED STOP-SLOW PADDLES. FLAGS MAY BE USED ONLY FOR EMERGENCY SITUATIONS.
9. MOST OF THE SIGNS SHOWN ARE ORIENTED TO THE RIGHT. HOWEVER, THIS DOES NOT PRECLUDE THE USE OF MIRROR IMAGES OF THESE SIGNS WHERE THE REVERSE ORIENTATION MIGHT BETTER CONVEY TO MOTORISTS THE PROPER DIRECTION OF MOVEMENT.
10. R55-1 SIGNS SHALL BE PLACED AT LEAST 1500' BUT NOT MORE THAN 1 MILE IN ADVANCE OF THE WORK ZONE. IF A SPEED LIMIT REDUCTION IS IN EFFECT, THE SIGN SHALL BE PLACED A MINIMUM OF 500' IN ADVANCE OF THE "REDUCED SPEED AHEAD" SIGN.

• NOTE: SUPPORTS FOR SIGNS, BARRICADES, AND VERTICAL PANELS THAT ARE DIFFERENT FROM THE REQUIREMENTS SHOWN IN NOTES 4 & 5, BUT MEET THE REQUIREMENTS OF MANUAL FOR ASSESSING SAFETY HARDWARE (MASH), WILL BE ACCEPTED. COMPLIANCE WITH THE REQUIREMENTS OF MANUAL FOR ASSESSING SAFETY HARDWARE (MASH) IS REQUIRED FOR ALL PROJECTS.

DATE	REVISION	FILMED
11-07-19	REVISED FOR MASH	
4-13-17	DELETED RSP-1 & ADDED W21-5a	
9-2-15	REVISED REDUCED SPEED LIMIT AHEAD SIGNS REVISED ROAD WORK NEXT XX MILES	
12-15-11	REVISED W24-1	
11-17-10	DELETED W8-9a & ADDED W8-9	
10-15-09	ADDED REFERENCE TO MASH & ADDED SIGN W24-1	
4-17-08	REVISED SIGN DESIGNATIONS	
11-18-04	REVISED NOTES	
10-9-03	REVISED NOTE 1	
11-16-01	REVISED NOTE 7	
9-28-00	REVISED NOTE	
11-18-98	ADDED NOTE	
6-26-97	REVISED NOTE 5	
4-03-97	REVISED NOTE 5	
10-18-96	ADDED CONTROLLED ACCESS HWY. SIGN & TO NOTE 7	
10-12-95	ADDED R55-1	
6-8-95	REVISED TO CORRECT SIGN ILLUSTRATIONS	6-8-95
2-2-95	REVISED PER PART VI, MUTCD SEPT. 3, 1993	
8-15-91	DRAWN AND PLACED IN USE	

ARKANSAS STATE HIGHWAY COMMISSION

STANDARD TRAFFIC CONTROLS FOR HIGHWAY CONSTRUCTION

STANDARD DRAWING TC-1

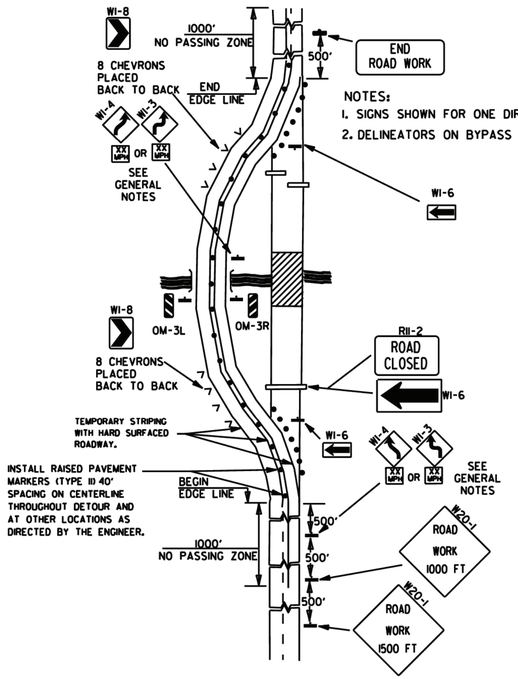

NOTES:
1. SIGNS SHOWN FOR ONE DIRECTION OF TRAVEL ONLY.
2. DELINEATORS ON BYPASS WHERE NEEDED.

(A) TYPICAL APPLICATION OF TRAFFIC CONTROL DEVICES ON A 2-LANE HIGHWAY WHERE THE ENTIRE ROADWAY IS CLOSED AND A BYPASS DETOUR IS PROVIDED.

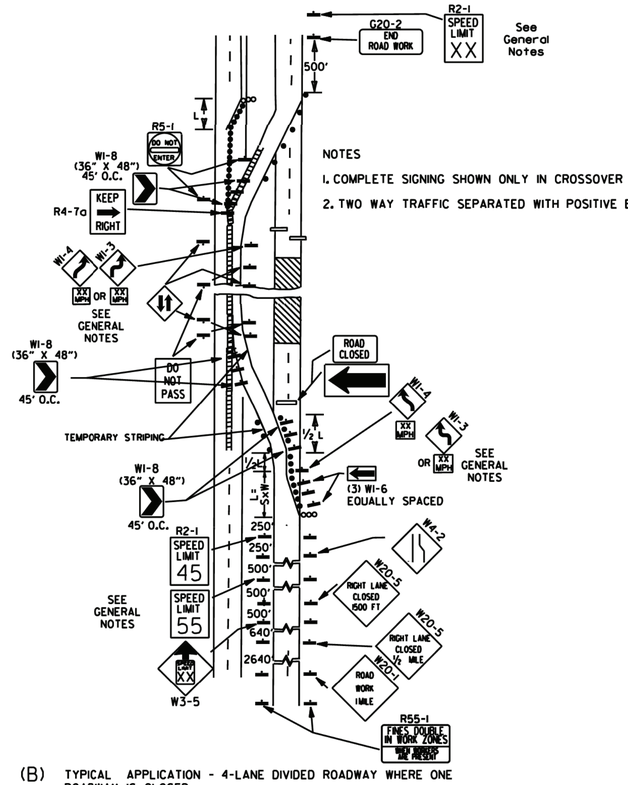

NOTES
1. COMPLETE SIGNING SHOWN ONLY IN CROSSOVER DIRECTION.
2. TWO WAY TRAFFIC SEPARATED WITH POSITIVE BARRIER.

(B) TYPICAL APPLICATION - 4-LANE DIVIDED ROADWAY WHERE ONE ROADWAY IS CLOSED.

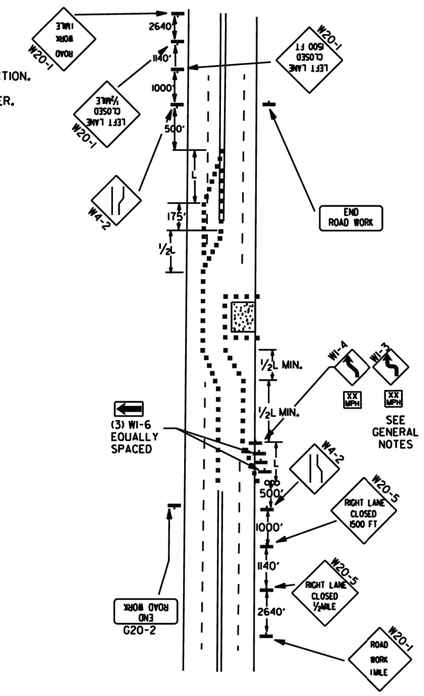

(C) TYPICAL APPLICATION - 4-LANE UNDIVIDED ROADWAY WHERE HALF OF THE ROADWAY IS CLOSED.

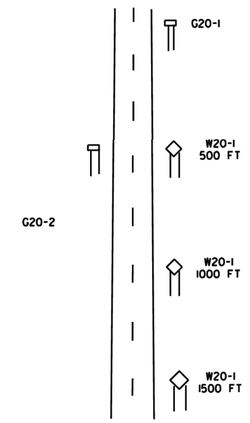

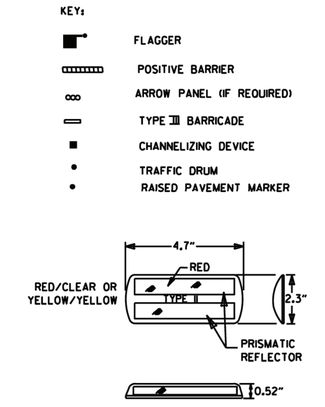

TYPICAL ADVANCE WARNING SIGN PLACEMENT

TAPER FORMULAE:

$L = SXW$ FOR SPEEDS OF 45MPH OR MORE.

$L = \frac{WS^2}{60}$ FOR SPEEDS OF 40MPH OR LESS.

WHERE:

L= MINIMUM LENGTH OF TAPER.

S= NUMERICAL VALUE OF POSTED SPEED LIMIT PRIOR TO WORK OR 85TH PERCENTILE SPEED.

W= WIDTH OF OFFSET.

GENERAL NOTES:

1. THE MAINTENANCE DIVISION SHALL CONDUCT A BALL BANK STUDY TO DETERMINE THE ADVISORY SPEED LIMIT PRIOR TO OPENING TO TRAFFIC. THE ADVISORY SPEED WILL BE POSTED ON W1-3 OR W1-4 CURVE WARNING SIGNS. USE W1-4 WHEN SPEED IS GREATER THAN 30MPH AND W1-3 WHEN 30MPH OR LESS
2. WHEN THE EXISTING SPEED LIMIT IS 55MPH AND THE PLANS REQUIRE A SPEED LIMIT OF 45MPH, THE R2-1(55) SHALL BE OMITTED AND THE W3-5 SHALL BE INSTALLED AT THAT LOCATION. ADDITIONAL R2-1 45MPH SPEED LIMIT SIGNS SHALL BE INSTALLED AT A MAXIMUM OF 1 MILE INTERVALS. AT THE END OF THE WORK AREA A R2-1(XX) SHALL BE INSTALLED TO MATCH ORIGINAL SPEED LIMIT.
3. WHEN THE EXISTING SPEED LIMIT IS 65MPH AND THE PLANS REQUIRE A SPEED LIMIT OF 55MPH, THE R2-1(45) SHALL BE OMITTED. ADDITIONAL R2-1 55MPH SPEED LIMIT SIGNS SHALL BE INSTALLED AT A MAXIMUM OF 1 MILE INTERVALS. AT THE END OF THE WORK AREA A R2-1(XX) SHALL BE INSTALLED TO MATCH ORIGINAL SPEED LIMIT.
4. THE MAXIMUM SPACING BETWEEN CHANNELIZING DEVICES IN A TAPER SHOULD BE APPROXIMATELY EQUAL IN FEET TO THE SPEED LIMIT. BEYOND THE TAPER, MAXIMUM SPACING SHALL BE TWO TIMES THE SPEED LIMIT, OR AS DIRECTED BY THE ENGINEER.
5. WARNING LIGHTS AND/OR FLAGS MAY BE MOUNTED TO SIGNS OR CHANNELIZING DEVICES AT NIGHT AS NEEDED.
6. PAVEMENT MARKINGS NO LONGER APPLICABLE WHICH MIGHT CREATE CONFUSION IN THE MINDS OF VEHICLE OPERATORS SHALL BE REMOVED OR OBLITERATED AS SOON AS PRACTICABLE.
7. TRAILER MOUNTED DEVICES SUCH AS ARROW PANELS AND PORTABLE CHANGEABLE MESSAGE SIGNS SHALL BE DELINEATED BY AFFIXING CONSPICUITY MATERIAL IN A CONTINUOUS LINE ON THE FACE OF THE TRAILER. WHEN PLACED ON OR ADJACENT TO THE SHOULDER AND NOT BEHIND A POSITIVE BARRIER, THESE DEVICES SHALL BE DELINEATED BY PLACING FIVE (5) TRAFFIC DRUMS, EQUALLY SPACED ALONG THE TRAFFIC SIDE OF THE DEVICE. PAYMENT FOR TRAFFIC DRUMS SHALL BE CONSIDERED INCLUDED IN THE PRICE BID FOR VARIOUS TRAILER MOUNTED DEVICES.
8. DIMENSIONS SHOWN FOR RAISED PAVEMENT MARKERS ARE TYPICAL. THE CONTRACTOR MAY SUBSTITUTE SIMILAR MARKERS WITH THE APPROVAL OF THE ENGINEER. REQUESTING APPROVAL FOR SIMILAR MARKERS MAY BE MADE BY REFERRING TO THE ARDOT QUALIFIED PRODUCTS LIST.
9. ALL TRAILER MOUNTED DEVICES SUCH AS ARROW PANELS AND PORTABLE CHANGEABLE MESSAGE SIGNS SHALL MEET THE REQUIREMENTS OF THE MANUAL FOR ASSESSING SAFETY HARDWARE (MASH).

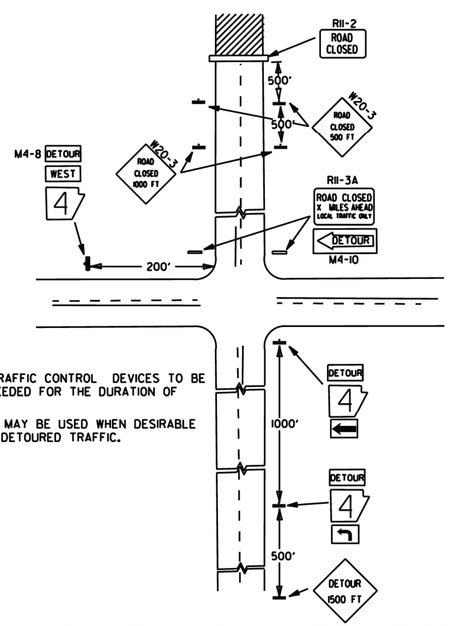

NOTES:
1. REGULATORY TRAFFIC CONTROL DEVICES TO BE MODIFIED AS NEEDED FOR THE DURATION OF THE DETOUR.
2. STREET NAMES MAY BE USED WHEN DESIRABLE FOR DIRECTING DETOURED TRAFFIC.

(D) TYPICAL APPLICATION - ROADWAY CLOSED BEYOND DETOUR POINT.

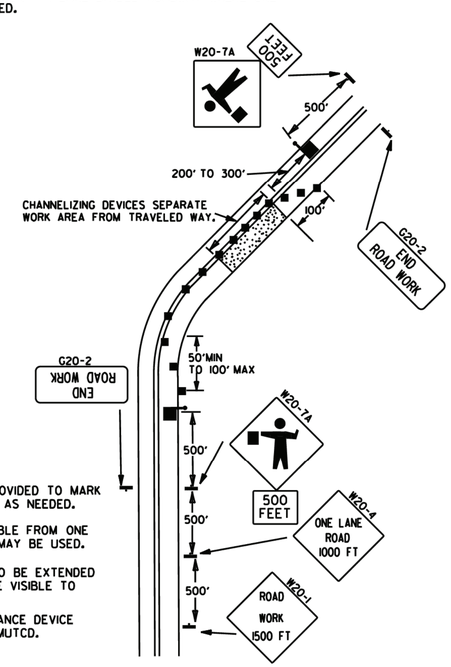

NOTES:
1. FLOOD LIGHTS SHOULD BE PROVIDED TO MARK FLAGGER STATIONS AT NIGHT AS NEEDED.
2. IF ENTIRE WORK AREA IS VISIBLE FROM ONE STATION, A SINGLE FLAGGER MAY BE USED.
3. CHANNELIZING DEVICES ARE TO BE EXTENDED TO A POINT WHERE THEY ARE VISIBLE TO APPROACHING TRAFFIC.
4. AUTOMATED FLAGGER ASSISTANCE DEVICE (AFAD) OPTIONAL. REFER TO MUTCD.

(E) TYPICAL APPLICATION OF TRAFFIC CONTROL DEVICES ON 2-LANE HIGHWAY WHERE ONE LANE IS CLOSED AND FLAGGING IS PROVIDED.

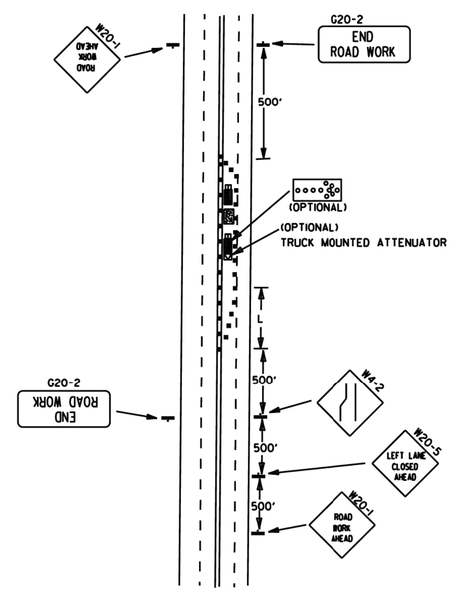

(F) TYPICAL APPLICATION - 4-LANE UNDIVIDED ROADWAY WITH INSIDE LANE CLOSED.

DATE	REVISION	FILMED
05-20-21	REVISED NOTE 7	
11-07-19	REVISED NOTE 1, ADDED NOTE 9	
9-2-15	REVISED NOTE 2. ADDED NOTE 8. REVISED DRAWING (A) & REPLACED R2-5A WITH W3-5	
9-12-13	REVISED DETAIL OF RAISED PAVEMENT MARKERS	
3-11-10	ADDED (AFAD)	
11-20-08	REVISED SIGN DESIGNATIONS	
11-18-04	ADDED GENERAL NOTE	
10-18-96	ADDED R55-1	
4-26-96	CORRECTED (a) BEHIND G20-2	
6-8-95	CORRECTED SIGN IDENT. ON W1-4A	6-8-95
2-2-95	REVISED PER PART VI, MUTCD, SEPT. 3, 1993	
8-15-91	DRAWN AND PLACED IN USE	

ARKANSAS STATE HIGHWAY COMMISSION

STANDARD TRAFFIC CONTROLS FOR HIGHWAY CONSTRUCTION

STANDARD DRAWING TC-2

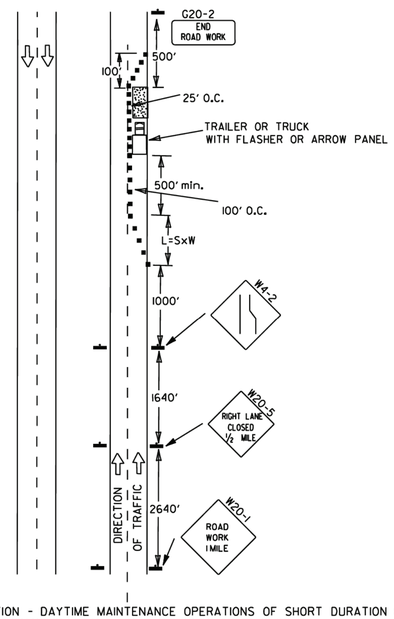

(A) TYPICAL APPLICATION - DAYTIME MAINTENANCE OPERATIONS OF SHORT DURATION ON A 4-LANE DIVIDED ROADWAY WHERE HALF OF THE ROADWAY IS CLOSED.

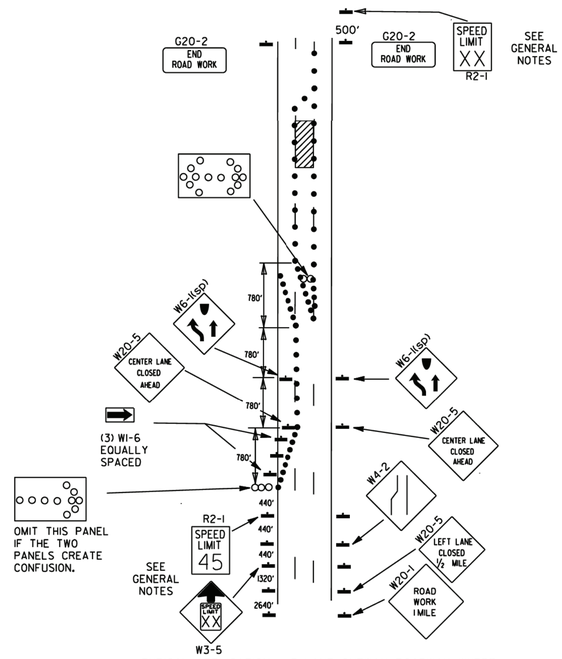

(B) TYPICAL APPLICATION - 3-LANE ONEWAY ROADWAY WHERE CENTER LANE IS CLOSED.

KEY:

ooo ARROW PANEL (IF REQUIRED)

■ CHANNELIZING DEVICE

● TRAFFIC DRUM

GENERAL NOTES:

1. A SPEED LIMIT REDUCTION MAY BE IMPLEMENTED ONLY WHEN DESIGNATED IN THE PLAN OR WHEN RECOMMENDED BY THE ROADWAY DESIGN DIVISION.
2. WHEN THE EXISTING SPEED LIMIT IS 55MPH AND THE PLANS REQUIRE A SPEED LIMIT OF 45MPH, THE R2-1(55) SHALL BE OMITTED AND THE W3-5 SHALL BE INSTALLED AT THAT LOCATION. ADDITIONAL R2-1 45MPH SPEED LIMIT SIGNS SHALL BE INSTALLED AT A MAXIMUM OF 1 MILE INTERVALS. AT THE END OF THE WORK AREA A R2-1(XX) SHALL BE INSTALLED TO MATCH ORIGINAL SPEED LIMIT.
3. WHEN THE EXISTING SPEED LIMIT IS 65MPH AND THE PLANS REQUIRE A SPEED LIMIT OF 55MPH, THE R2-1(45) SHALL BE OMITTED. ADDITIONAL R2-1 55MPH SPEED LIMIT SIGNS SHALL BE INSTALLED AT A MAXIMUM OF 1 MILE INTERVALS. AT THE END OF THE WORK AREA A R2-1(XX) SHALL BE INSTALLED TO MATCH ORIGINAL SPEED LIMIT.
4. THE MAXIMUM SPACING BETWEEN CHANNELIZING DEVICES IN A TAPER SHOULD BE APPROXIMATELY EQUAL IN FEET TO THE SPEED LIMIT. BEYOND THE TAPER, MAXIMUM SPACING SHALL BE TWO TIMES THE SPEED LIMIT OR AS DIRECTED BY THE ENGINEER.
5. WARNING LIGHTS AND/OR FLAGS MAY BE MOUNTED TO SIGNS OR CHANNELIZING DEVICES AT NIGHT AS NEEDED.
6. PAVEMENT MARKINGS NO LONGER APPLICABLE WHICH MIGHT CREATE CONFUSION IN THE MINDS OF VEHICLE OPERATORS SHALL BE REMOVED OR OBLITERATED AS SOON AS PRACTICABLE.
7. THE G20-1 SIGN WILL BE REQUIRED ON JOBS OF OVER TWO MILES IN LENGTH. WHEN THE LANE CLOSURE IS NOT AT THE BEGINNING OF THE PROJECT, THE G20-1 SIGN SHALL BE ERECTED 125' IN ADVANCE OF THE JOB LIMIT. ADDITIONAL W20-1 (1 MILE) SIGNS ARE NOT REQUIRED IN ADVANCE OF LANE CLOSURES THAT BEGIN INSIDE THE PROJECT LIMITS.
8. FLAGGERS SHALL USE STOP/SLOW PADDLES FOR CONTROLLING TRAFFIC THROUGH WORK ZONES. FLAGS MAY BE USED ONLY FOR EMERGENCY SITUATIONS.
9. ALL PLASTIC DRUMS AND CONES SHALL MEET THE REQUIREMENTS OF MANUAL FOR ASSESSING SAFETY HARDWARE (MASH).
10. TRAILER MOUNTED DEVICES SUCH AS ARROW PANELS AND PORTABLE CHANGEABLE MESSAGE SIGNS SHALL BE DELINEATED BY AFFIXING CONSPICUITY MATERIAL IN A CONTINUOUS LINE ON THE FACE OF THE TRAILER. WHEN PLACED ON OR ADJACENT TO THE SHOULDER AND NOT BEHIND A POSITIVE BARRIER, THESE DEVICES SHALL BE DELINEATED BY PLACING FIVE (5) TRAFFIC DRUMS, EQUALLY SPACED ALONG THE TRAFFIC SIDE OF THE DEVICE. PAYMENT FOR TRAFFIC DRUMS SHALL BE CONSIDERED INCLUDED IN THE PRICE BID FOR VARIOUS TRAILER MOUNTED DEVICES.
11. ALL TRAILER MOUNTED DEVICES SUCH AS ARROW PANELS AND PORTABLE CHANGEABLE MESSAGE SIGNS SHALL MEET THE REQUIREMENTS OF THE MANUAL FOR ASSESSING SAFETY HARDWARE (MASH).

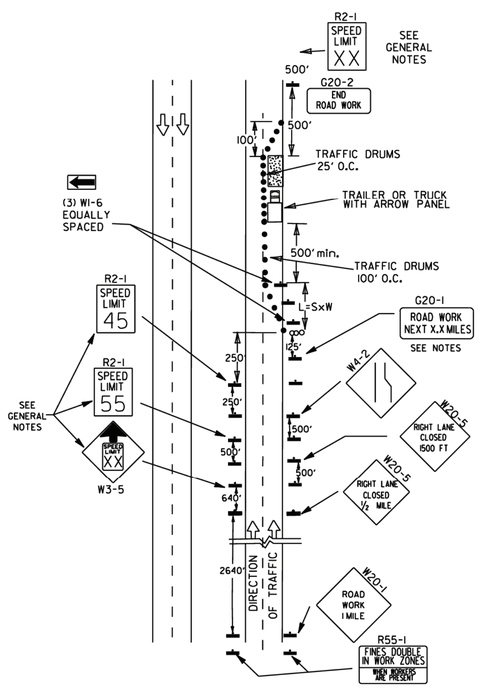

(C) TYPICAL APPLICATION - CONSTRUCTION OPERATIONS OF INTERMEDIATE TO LONG TERM DURATION ON A 4-LANE DIVIDED ROADWAY WHERE HALF OF THE ROADWAY IS CLOSED.

CHANNELIZING DEVICES

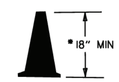

* WHEN CONES ARE USED ON FREEWAYS AND MULTI-LANE HIGHWAYS, THEY SHALL BE 28" MIN. DURING HOURS OF DARKNESS, 28" CONES SHALL BE USED ON ALL ROADWAYS, AND SHALL BE REFLECTORIZED IN ACCORDANCE WITH THE M.U.T.C.D.

CONES

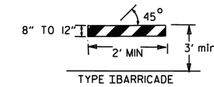

TYPE I BARRICADE

PLASTIC DRUM

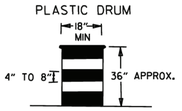

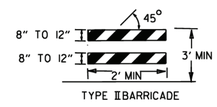

TYPE II BARRICADE

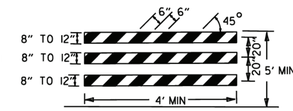

TYPE III BARRICADE

NOTE:
FOR ALL ROAD CLOSURES, THE TYPE III BARRICADES SHALL BE OF SUFFICIENT LENGTH TO EXTEND ACROSS ENTIRE ROADWAY.

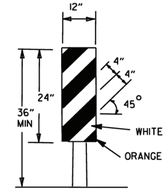

VERTICAL PANEL
VP-1R

VERTICAL PANEL PLACEMENT

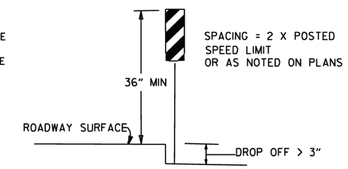

FLAG

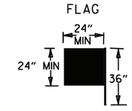

FLAG SHALL BE OF GOOD GRADE RED MATERIAL

TRAFFIC CONTROL DEVICES

NON-INTERSTATE			
VERTICAL DIFFERENTIAL	LOCATION	TRAFFIC CONTROL	
		≤ 45 MPH	> 45 MPH
≤ 1"	CENTERLINE	W8-11	W8-11
> 1" ≤ 3"	CENTERLINE	W8-11 AND CENTERLINE LANE STRIPING	W8-11 AND CENTERLINE LANE STRIPING
> 3"	CENTERLINE	STANDARD LANE CLOSURE(6)	STANDARD LANE CLOSURE(6)
≤ 3"	EDGE OF TRAVELED LANE OR EDGE OF SHOULDER	W8-9 AND TRAFFIC DRUMS(1)	W8-9 AND TRAFFIC DRUMS(1)
> 3" ≤ 6"	EDGE OF TRAVELED LANE OR EDGE OF SHOULDER	W8-17, EDGE LINE STRIPING, AND TRAFFIC DRUMS(1)	W8-17, EDGE LINE STRIPING, AND TRAFFIC DRUMS(1)
> 6" ≤ 18"	EDGE OF TRAVELED LANE OR EDGE OF SHOULDER	W8-17, EDGE LINE STRIPING, AND TRAFFIC DRUMS(1)	W8-17, EDGE LINE STRIPING, AND TRAFFIC DRUMS(2)
> 18" ≤ 24"	EDGE OF TRAVELED LANE OR EDGE OF SHOULDER	W8-17, EDGE LINE STRIPING, AND TRAFFIC DRUMS(1)	A STABILIZED WEDGE, W8-17, EDGE LINE STRIPING, AND TRAFFIC DRUMS(3)
> 24"	EDGE OF TRAVELED LANE OR EDGE OF SHOULDER	PRECAST CONCRETE BARRIER(4) & EDGE LINES	PRECAST CONCRETE BARRIER(4) & EDGE LINES

INTERSTATE		
VERTICAL DIFFERENTIAL	LOCATION	TRAFFIC CONTROL
≤ 3"	CENTERLINE	W8-11 AND LANE STRIPING
≤ 3"	EDGE OF TRAVELED LANE OR EDGE OF SHOULDER	W8-9, EDGE LINE STRIPING, AND TRAFFIC DRUMS(2)
> 3" ≤ 6"	EDGE OF TRAVELED LANE OR EDGE OF SHOULDER	W8-17, EDGE LINE STRIPING, AND TRAFFIC DRUMS(2)
> 6"	EDGE OF TRAVELED LANE OR EDGE OF SHOULDER	PRECAST CONCRETE BARRIER & EDGE LINES

INTERSTATE AND NON-INTERSTATE		
FORESLOPE	HEIGHT	TRAFFIC CONTROL
1:1	> 2 FT	PRECAST CONCRETE BARRIER
2:1	≤ 5 FT	TRAFFIC DRUMS
2:1	> 5 FT	PRECAST CONCRETE BARRIER
Flatter than 2:1	N/A	TRAFFIC DRUMS

GENERAL NOTES:

1. WHEN THE SHOULDER AREA IS USED AS PART OF THE TRAVELED LANE AND THERE IS INSUFFICIENT WIDTH TO PLACE TRAFFIC DRUMS ON THE REMAINING SHOULDER WIDTH, THEN VERTICAL PANELS SHALL BE USED.
2. WHEN THERE IS INSUFFICIENT WIDTH TO PLACE TRAFFIC DRUMS ON THE REMAINING SHOULDER WIDTH, A STABILIZED WEDGE SHALL BE USED.
3. PRECAST CONCRETE BARRIER WALL CAN BE USED IN LIEU OF A STABILIZED WEDGE, W8-17 SIGN, EDGE LINE STRIPING, AND TRAFFIC DRUMS, IF AND WHERE DIRECTED BY THE ENGINEER.
4. A STABILIZED WEDGE, W8-17 SIGN, EDGE LINE STRIPING, AND TRAFFIC DRUMS CAN BE USED IN LIEU OF PRECAST CONCRETE BARRIER WALL, IF AND WHERE DIRECTED BY THE ENGINEER.
5. W21-5, W21-5a, AND/OR W21-5b SIGNS SHALL BE USED WHERE THE ROADWAY IS UNOBSTRUCTED IF AND WHERE DIRECTED BY THE ENGINEER.
6. TIME LIMITATIONS MUST CONFORM TO SECTION 603 OF THE STANDARD SPECIFICATIONS FOR HIGHWAY CONSTRUCTION (CURRENT EDITION).

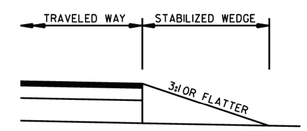

STABILIZED WEDGE

NOTE:
MATERIALS FOR THE STABILIZED WEDGE SHALL MEET THE REQUIREMENTS PROVIDED IN SECTION 603.02 OF THE STANDARD SPECIFICATIONS.

STOP SLOW PADDLE

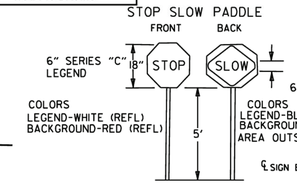

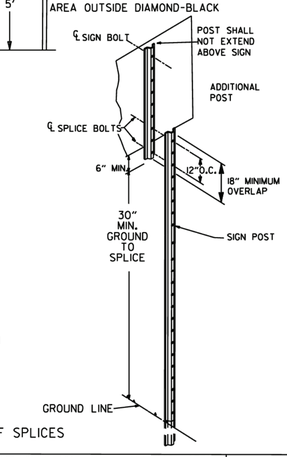

NOTES: USE SPLICES ONLY WHEN NECESSARY FOR INSTALLATION. TYPICAL INSTALLATION SHOULD HAVE NO SPLICES (SEE STD. DRAWING NO. SHS-2)

NORMAL INSTALLATIONS WILL REQUIRE 1/4" DIA. BOLTS TO MOUNT SIGNS TO POST AND 5/16" DIA. BOLTS TO ASSEMBLE THE VARIOUS POST SUPPORTS. EACH OF THESE BOLTS SHALL BE CARRIAGE BOLTS.

SIGN POSTS SHALL BE PAINTED GREEN; SIGNS SHALL NOT BE PAINTED, AND ALL SIGN POSTS SHALL BE PLUMB.

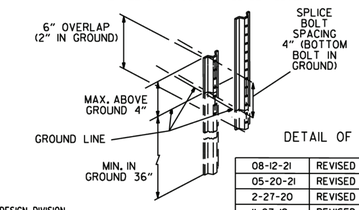

DETAIL OF SPLICES

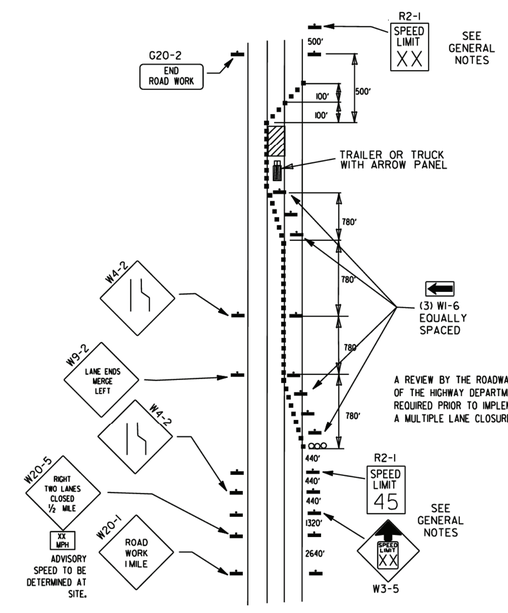

A REVIEW BY THE ROADWAY DESIGN DIVISION OF THE HIGHWAY DEPARTMENT WILL BE REQUIRED PRIOR TO IMPLEMENTING A MULTIPLE LANE CLOSURE.

(D) TYPICAL APPLICATION - CLOSING MULTIPLE LANES OF A MULTILANE HIGHWAY.

DATE	REVISION	FILMED
08-12-21	REVISED TRAFFIC CONTROL DEVICES AND NOTES	
05-20-21	REVISED NOTE 10	
2-27-20	REVISED TRAFFIC CONTROL DEVICES DETAILS	
11-07-19	REVISED NOTE 9, ADDED NOTE 11	
7-25-19	REVISED TRAFFIC CONTROL DEVICES DETAILS	
9-2-15	REVISED NOTE 2 & REPLACED R2-5A WITH W3-5	
10-15-09	ADDED REFERENCE TO MASH	
11-20-08	REVISED SIGN DESIGNATIONS	
11-18-04	ADDED NOTE	
10-1-98	ADDED NOTE	
4-03-97	ADDED (SP) TO W6-1& REVISED TRAFFIC CONTROL DEVICES NOTE	
10-18-96	ADDED R55-1	
10-12-95	MOVED UPPER SPLICE	
6-8-95	REVISED SPLICE DETAIL, TEXT	6-8-95
2-2-95	REVISED PER PART VI, MUTCD, SEPT. 3, 1993	
8-15-91	DRAWN AND PLACED IN USE	

ARKANSAS STATE HIGHWAY COMMISSION

STANDARD TRAFFIC CONTROLS FOR HIGHWAY CONSTRUCTION

STANDARD DRAWING TC-3

GENERAL NOTES

INSTALL A MINIMUM OF 2 UPSLOPE STAKES AND 4 DOWNSLOPE STAKES AT AN ANGLE TO WEDGE WATTLE TO BOTTOM OF DITCH.

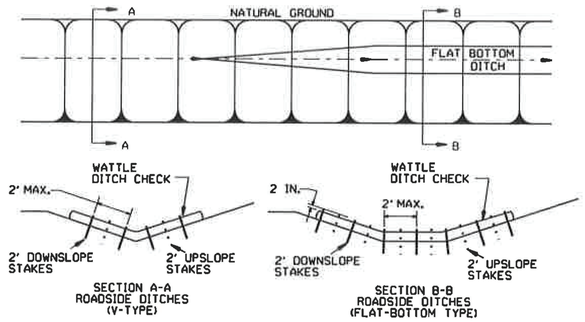

WATTLE DITCH CHECK (E-1)

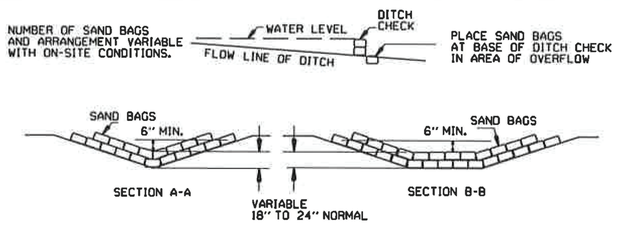

SAND BAG DITCH CHECK (E-5)

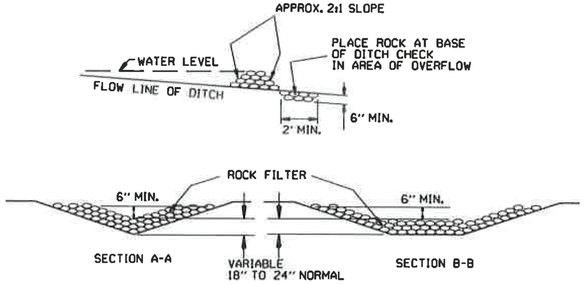

ROCK DITCH CHECK (E-6)

GENERAL NOTES

GEOTEXTILE FABRIC (TYPE 4) IN ACCORDANCE WITH SECTION 625

GEOTEXTILE FABRIC SHALL BE SPLICED TOGETHER WITH A SEWN SEAM ONLY AT A SUPPORT POST OR TWO SECTIONS OF FENCE MAY BE OVERLAPPED INSTEAD. PAYMENT OF ADDITIONAL MATERIAL FOR OVERLAP WILL NOT BE MADE.

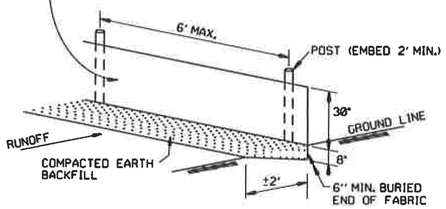

SILT FENCE (E-11)

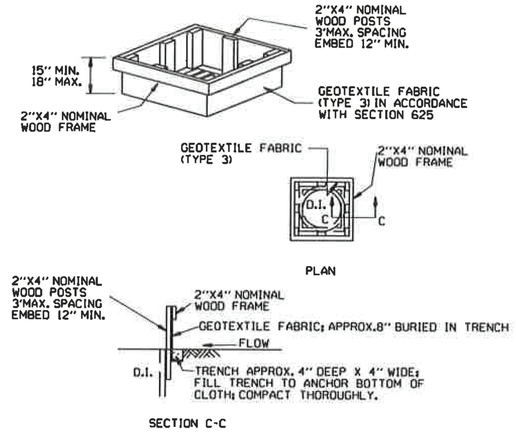

DROP INLET SILT FENCE (E-7)

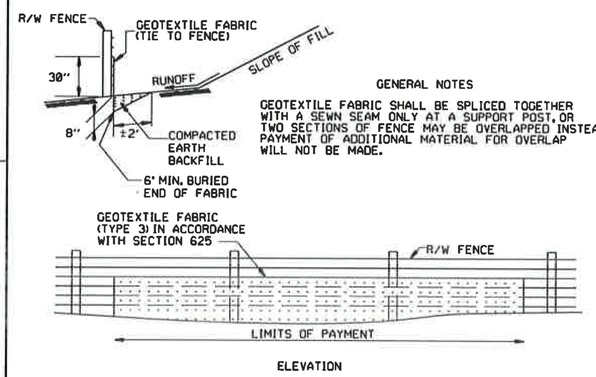

GENERAL NOTES

GEOTEXTILE FABRIC SHALL BE SPLICED TOGETHER WITH A SEWN SEAM ONLY AT A SUPPORT POST, OR TWO SECTIONS OF FENCE MAY BE OVERLAPPED INSTEAD. PAYMENT OF ADDITIONAL MATERIAL FOR OVERLAP WILL NOT BE MADE.

SILT FENCE ON R/W FENCE (E-4)

GENERAL NOTES

1. STRAW BALES SHALL BE INSTALLED SO THAT THE BINDINGS ARE ORIENTED AROUND THE SIDES RATHER THAN ALONG THE TOPS AND BOTTOMS OF THE BALES. THE BALES SHALL BE A MINIMUM OF 30 INCHES IN LENGTH.

2. NO GAPS SHALL BE LEFT BETWEEN BALES.

3. BALED STRAW FILTER BARRIERS COMPLETED AND ACCEPTED WILL BE MEASURED BY THE BALE IN PLACE AS AUTHORIZED BY THE ENGINEER AND WILL BE PAID FOR AT THE CONTRACT UNIT PRICE BID PER BALE FOR BALED STRAW DITCH CHECKS.

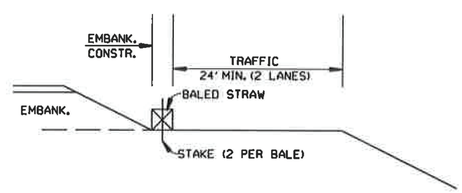

BALED STRAW FILTER BARRIER (E-2)

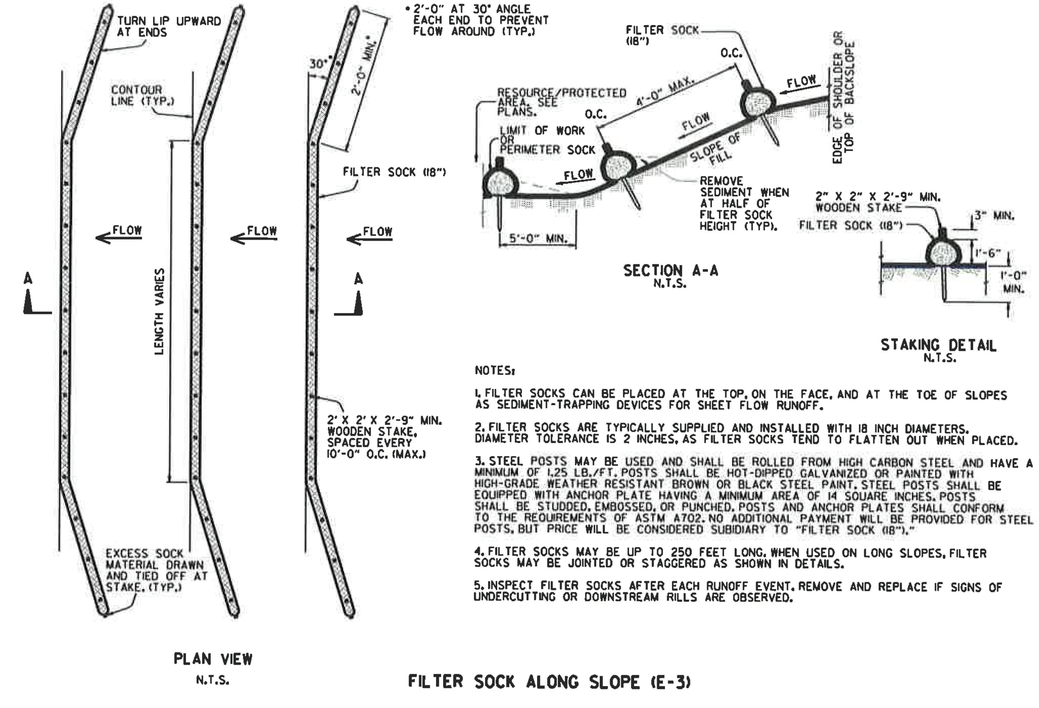

NOTES:

1. FILTER SOCKS CAN BE PLACED AT THE TOP, ON THE FACE, AND AT THE TOE OF SLOPES AS SEDIMENT-TRAPPING DEVICES FOR SHEET FLOW RUNOFF.

2. FILTER SOCKS ARE TYPICALLY SUPPLIED AND INSTALLED WITH 18 INCH DIAMETERS. DIAMETER TOLERANCE IS 2 INCHES, AS FILTER SOCKS TEND TO FLATTEN OUT WHEN PLACED.

3. STEEL POSTS MAY BE USED AND SHALL BE ROLLED FROM HIGH CARBON STEEL AND HAVE A MINIMUM OF 1.25 LB./FT. POSTS SHALL BE HOT-DIPPED GALVANIZED OR PAINTED WITH HIGH-GRADE WEATHER RESISTANT BROWN OR BLACK STEEL PAINT. STEEL POSTS SHALL BE EQUIPPED WITH ANCHOR PLATE HAVING A MINIMUM AREA OF 14 SQUARE INCHES. POSTS SHALL BE STUDDED, EMBOSSED, OR PUNCHED. POSTS AND ANCHOR PLATES SHALL CONFORM TO THE REQUIREMENTS OF ASTM A702. NO ADDITIONAL PAYMENT WILL BE PROVIDED FOR STEEL POSTS, BUT PRICE WILL BE CONSIDERED SUBIDIARY TO "FILTER SOCK (18")."

4. FILTER SOCKS MAY BE UP TO 250 FEET LONG. WHEN USED ON LONG SLOPES, FILTER SOCKS MAY BE JOINTED OR STAGGERED AS SHOWN IN DETAILS.

5. INSPECT FILTER SOCKS AFTER EACH RUNOFF EVENT. REMOVE AND REPLACE IF SIGNS OF UNDERCUTTING OR DOWNSTREAM RILLS ARE OBSERVED.

FILTER SOCK ALONG SLOPE (E-3)

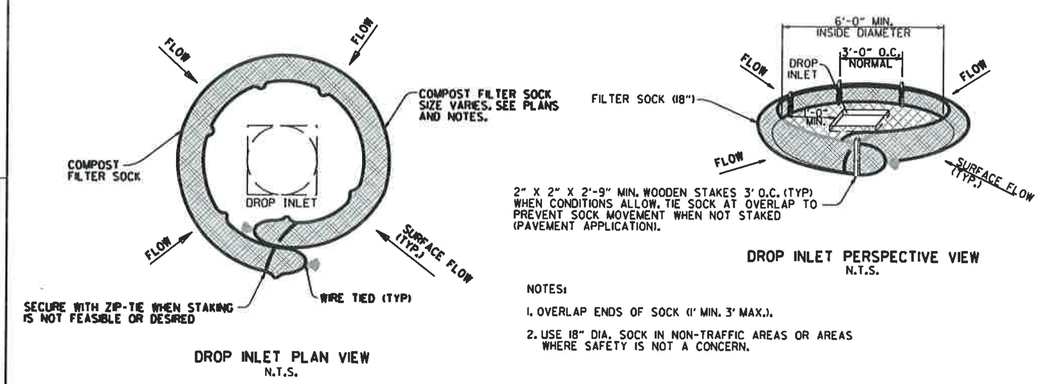

NOTES:

1. OVERLAP ENDS OF SOCK (1' MIN. 3' MAX.).

2. USE 18" DIA. SOCK IN NON-TRAFFIC AREAS OR AREAS WHERE SAFETY IS NOT A CONCERN.

COMPOST FILTER SOCK DROP INLET PROTECTION (E-13)

DATE	REVISION	FILMED
11-16-17	ADDED FILTER SOCK E-3 AND E-13	
12-15-11	DELETED BALED STRAW DITCH CHECK & ADDED WATTLE DITCH CHECK	
11-18-98	ADDED NOTES	
07-02-98	ADDED BALED STRAW FILTER BARRIER (E-2)	
07-20-95	REVISED SILT FENCE E-4 AND E-11	7-20-95
07-15-94	REV. E-4 & E-11 MIN. 13" BURIED END OF FABRIC	
06-02-94	REVISED E-1,4,7 & 11; DELETED E-2 & 3	6-2-94
04-01-93	REDRAWN	
10-01-92	REDRAWN	
08-02-76	ISSUED R.D.M.	298-7-28-76

ARKANSAS STATE HIGHWAY COMMISSION

TEMPORARY EROSION CONTROL DEVICES

STANDARD DRAWING TEC-1