DATE REVISED	DATE FILMED	DATE REVISED	DATE FILMED	FED. RD. DIST. NO.	STATE	FED. AID PROJ. NO.	SHEET NO.	TOTAL SHEETS
10/22/15		1/16/17		6	AR			
2/19/16		6/13/17		JOB No.		060907	1	67
5/19/16				(2) GEYER SPRINGS R.R. GRADE SEPARATION (LITTLE ROCK) (S)				

GEYER SPRINGS R.R. GRADE SEPARATION (LITTLE ROCK) (S)

PULASKI COUNTY
JOB 060907
FED. AID PROJECT HPP-0346(1)

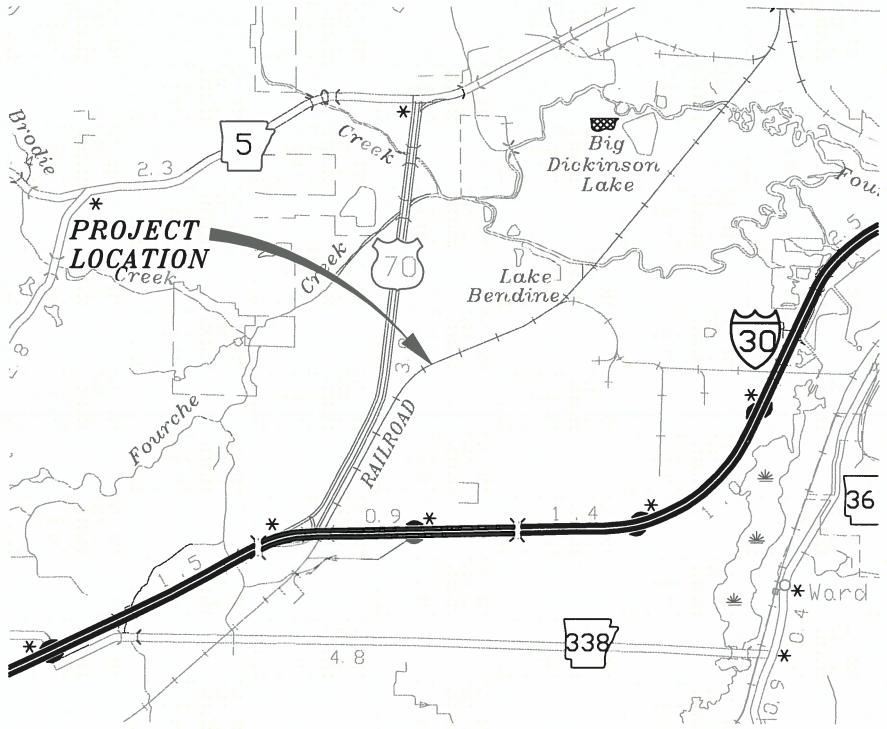

VICINITY MAP

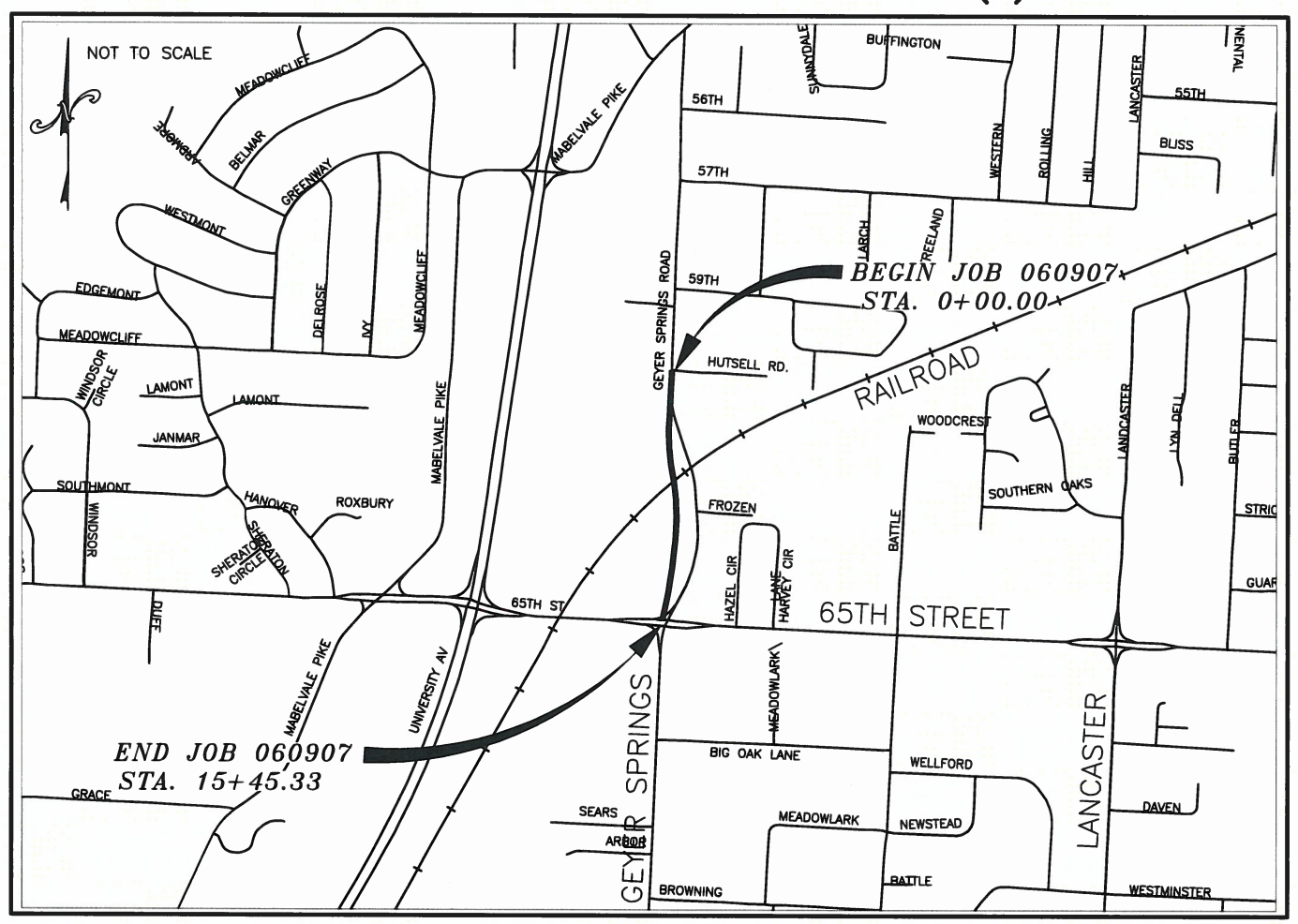

SECTION 12, T-1-N, R-13-W, PULASKI COUNTY, ARKANSAS

PROJECT LOCATION MAP

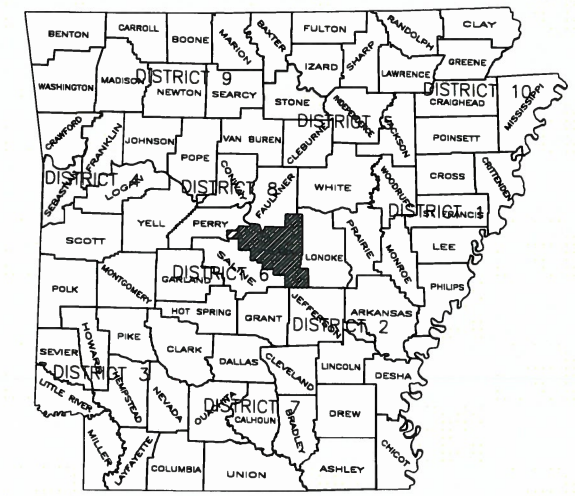

ARKANSAS HIGHWAY DISTRICT 6

DESIGN TRAFFIC DATA

DESIGN YEAR----------2036
2015 ADT----------12,000
2036 ADT----------15,000
DIRECTIONAL DISTRIBUTION ---------0.60
TRUCKS---------- 3%
DESIGN SPEED----------35 MPH

STA. 6+24.22 BRIDGE BEGIN
BRIDGE NO. TBD
7'-8" COMPOSITE SIMPLE W-BEAM
127'-8" BRIDGE LENGTH
46'-10" WIDTH CL. RDWY
STA. 7+51.89 BRIDGE END

STATE OF ARKANSAS
LICENSED PROFESSIONAL ENGINEER
No. 13365
Leon Dale Burke, Jr.
6/13/17

811 Know what's below. Call before you dig.

PUBLIC WORKS · CITY OF LITTLE ROCK ·

MEHLBURGER BRAWLEY
10 N. SHACKLEFORD PLAZA, SUITE 104
LITTLE ROCK, ARKANSAS 72211
(501) 375-5331 - FAX (501) 398-6481
CA # 2532 EXPIRES 12/31/17

MID-POINT OF PROJECT
LAT. N34°41'30"
LONG. W92°21'15"

GROSS LENGTH OF PROJECT 1,549.57 FT. OR 0.293 MILES
NET LENGTH OF ROADWAY 1,417.66 FT. OR 0.268 MILES
GROSS LENGTH OF BRIDGES 127.67 FT. OR 0.024 MILES
NET LENGTH OF PROJECT 1,549.57 FT. OR 0.293 MILES

P.E. JOB 060907

REVISION DATE

30% PLANS - 12/4/15
60% PLANS - 2/19/16
90% PLANS - 5/19/16
90% UPDATED - 1/16/17
100% PLANS - 6/13/17

DATE REVISED	DATE FILMED	DATE REVISED	DATE FILMED	FED. RD. DIST. NO.	STATE	FED. AID PROJ. NO.	SHEET NO.	TOTAL SHEETS
10/22/15		1/16/17		6	AR	HPP-0346(1)		
2/19/16		6/13/17		JOB No.		060907	2	67
5/19/16								

(2) INDEX OF SHEETS, GENERAL SPECIFICATIONS, GENERAL NOTES

INDEX OF SHEETS

GOVERNING SPECIFICATIONS

ARKANSAS STATE HIGHWAY COMMISSION STANDARD SPECIFICATIONS FOR HIGHWAY CONSTRUCTION, EDITION OF 2014, AND THE FOLLOWING SPECIAL PROVISIONS AND SUPPLEMENTAL SPECIFICATIONS:

NUMBER:	TITLE
ERRATA	ERRATA FOR THE BOOK OF STANDARD SPECIFICATIONS
FHWA-1273	REQUIRED CONTRACT PROVISIONS FEDERAL-AID CONSTRUCTION CONTRACTS
FHWA-1273	SUPPLEMENT - EQUAL EMPLOYMENT OPPORTUNITY - NOTICE TO CONTRACTORS
FHWA-1273	SUPPLEMENT - SPECIFIC EQUAL EMPLOYMENT OPPORTUNITY RESPONSIBILITIES (23 U.S.C. 140)
FHWA-1273	SUPPLEMENT - EQUAL EMPLOYMENT OPPORTUNITY - GOALS AND TIMETABLES
FHWA-1273	SUPPLEMENT - EQUAL EMPLOYMENT OPPORTUNITY - FEDERAL STANDARDS
FHWA-1273	SUPPLEMENT - POSTERS AND NOTICES REQUIRED FOR FEDERAL-AID PROJECTS
FHWA-1273	SUPPLEMENT - WAGE RATE DETERMINATION
JOB 060907	INSURANCE, CONSTRUCTION AND FLAGGING REQUIREMENTS ON RAILROAD PROPERTIES

GENERAL NOTES

1. LITTLE ROCK'S CONTACT CONDITIONS & SPECIFICATIONS SHALL GOVERN IN CASE OF CONFLICT BETWEEN ARKANSAS STATE HIGHWAY COMMISSION STANDARD SPECIFICATIONS FOR HIGHWAY CONSTRUCITON AND CITY OF LITTLE ROCK'S CONTACT CONDITIONS & SPECIFICATIONS (DECEMBER,2015 REVISION).
2. THE TERM "ENGINEER" IN THE ARKANSAS STATE HIGHWAY COMMISSION STANDARD SPECIFICATIONS FOR HIGHWAY CONSTRUCITON IS RE-DEFINED AS THE CITY OF LITTLE ROCK'S CIVIL ENGINEERING MANAGER OF THE DEPARTMENT OF PUBLIC WORKS.
3. ALL LAND MONUMENTS LOCATED WITHIN THE CONSTRUCTION AREA SHALL BE PROTECTED IN ACCORDANCE WITH SECTION 107.12 OF THE STANDARD SPECIFICATIONS.
4. LEVEL DATUM BASED ON PULASKI AREA GEOGRAPHIC INFORMATION SYSTEM (PAGIS).
5. GRADE LINE DENOTES FINISHED GRADE WHERE SHOWN ON PLANS.
6. CONTRACTOR MAY BE REQUIRED TO ADJUST HORIZONTAL AND VERTICAL ALIGNMENTS TO MATCH EXISTING CONDITIONS AND TO ENSURE POSITIVE DRAINAGE.
7. REFER TO CROSS SECTION SHEETS FOR FINISHED GRADE ELEVATIONS.
8. ALL TREES THAT DO NOT DIRECTLY INTERFERE WITH THE PROPOSED CONSTRUCTION SHALL BE SPARED AS DIRECTED BY THE ENGINEER. CARE AND DISCRETION SHALL BE USED TO INSURE THAT ALL TREES NOT TO BE REMOVED SHALL BE HARMED AS LITTLE ASPOSSIBLE DURING THE CONSTRUCTION OPERATIONS.
9. NOTIFY ARKANSAS ONE-CALL SYSTEM, INC., FOR LOCATION OF EXISTING UTILITIES PRIOR TO BEGINNING CONSTRUCTION.
10. CONTRACTOR TO BE RESPONSIBLE FOR SWPPP AND EROSION CONTROL DURING CONSTRUCTION AND SHALL MAINTAIN DEVICES FOR PROJECT DURATION.
11. EXISTING STRUCTURES TO BE REMOVED AND DEBRIS SHALL BE DISPOSED OF IN ACCORDANCE WITH ALL LOCAL, STATE AND FEDERAL REGULATIONS.
12. CITY OF LITTLE ROCK SHALL BE NOTIFIED FOR INSPECTIONS PRIOR TO PLACEMENT OF ANY BASE COURSE, ASPHALT OR STRUCTURES.
13. ALL LOCAL CODES AND ORDINANCES SHALL APPLY. CONTRACTOR SHALL BE RESPONSIBLE FOR ANY APPLICABLE FEES OR PERMITS.
14. LEVEL DATUM IS U.S.C. & G.S
15. GRADE LINE DENOTES FINISH GRADE WHERE SHOWN ON PLANS.
16. ALL PIPE LINES, POWER, TELEPHONE & TELEGRAPH LINES TO BE MOVED OR LOWERED BY THE RESPECTIVE OWNERS AS PER AGREEMENT WITH SUCH OWNERS.
17. ANY EQUIPMENT OR APPURTANCES THAT INTERFERES WITH THE PROPOSED CONSTRUCTION & WHICH MAY BE THE PROPERTY OF UTILITY SERVICE ORGANIZATIONS SHALL BE MOVED BY THE OWNERS UNLESS OTHERWISE PROVIDED.
18. CONTRACTOR SHALL BE REPONSIBLE FOR MAINTAINING U.S. MAILBOX WITHIN THE PROJECT LIMITS IN SUCH A MANNER THAT THE PUBLIC MAY RECIEVE CONTINUED MAIL SERVICE. PAYMENT WILL BE CONSIDERED INCLUDED IN THE PRICE BID FOR VARIOUS PAID ITEMS.
19. THIS PROJECT IS COVERED UNDER A NATIONWIDE SECTION 14 PERMIT. REFER TO SECTION 110 OF THE STANDARD SPECIFICATIONS, EDITION 2014 FOR PERMIT REQUIREMENTS.
20. STEEL AND IRON ITEMS ARE SUBJECT TO THE "BUY AMERICA" PROVISIONS OF 23 CFR SECT. 635.410, AND THE REQUIREMENTS AND RESTRICTIONS OF SECTION 106(B) OF THE ARKANSAS 2014 STANDARD SPECIFICATIONS.

SYMBOLS

	RETAIN PVMT., CURB & GUTTER	B.C.	EXISTING BACK OF CURB
	TRAIL	160.61 FT N27°15'33"E	NEW POWER LINE / CENTERLINE CONSTRUCTION W/
	DEMOLITION		NEW SWALE
	EDGE OF TRAIL		NEW LIGHT POLE
	EARTHWORK LIMIT		EXISTING LIGHT POLE
360	5- FOOT CONTOUR LINE	CP 6	CONTROL POINT
	NEW YARD DRAIN		NEW CULVERT PIPE
	FLOODWAY LIMIT	E-7	DROP-INLET SILT FENCE
	REMOVABLE BOLLARDS	E-11	SILT FENCE
NTS	NOT TO SCALE	E.P.	EDGE OF PAVEMENT
	NEW PVC CONDUIT		NEW TREATED WOOD POLE
CPS	COTTON PICKER SPINDLE		BENCHMARK
COE MON	CORP. OF ENGINEERS MONUMENT	CP	CONTROL POINT

STATE OF ARKANSAS
LICENSED PROFESSIONAL ENGINEER
No. 15365
Leon Dale Burke, Jr.
6/13/17

GEYER SPRINGS OVERPASS
ROUTE SEC.
CITY OF LITTLE ROCK
LITTLE ROCK, ARK

MEHLBURGER BRAWLEY
10 N. SHACKLEFORD PLAZA, SUITE 104
LITTLE ROCK, ARKANSAS 72211
(501) 375-5331 - FAX (501) 398-6481
CA # 2532 EXPIRES 12/31/17

DRAWN BY: CDP DATE: 10/22/15
CHECKED BY: DB DATE: 10/22/15
DESIGNED BY: MB DATE: 10/22/15
FILENAME: INDEX
SCALE: NTS

BRIDGE ENGINEER

BRIDGE NO. — DRAWING NO.

DATE REVISED	DATE FILMED	DATE REVISED	DATE FILMED	FED. RD. DIST. NO.	STATE	FED. AID PROJ. NO.	SHEET NO.	TOTAL SHEETS
10/22/15		1/16/17		6	AR			
2/19/16		6/13/17		JOB No.		060907	3	67
5/19/16								

(2) TYPICAL SECTIONS

GENERAL NOTES:

1. REFER TO CROSS SECTIONS FOR DEVIATIONS FROM THE NORMAL SLOPES. NO CHANGES SHALL BE MADE FROM THE PLANNED SLOPES WITHOUT THE APPROVAL OF THE ENGINEER.

2. THE THICKNESS OF THE AGGREGATE BASE COURSE SHALL BE WITHIN PLUS OR MINUS ONE INCH(25mm) OF THE PLAN THICKNESS SHOWN. THE CONTRACTOR WILL CORRECT ANY DEFICIENT THICKNESS THAT DOES NOT MEET TOLERANCE INDICATED. PAYMENT WILL NOT BE MADE FOR MATERIAL PLACED IN EXCESS OF THE TOLERANCE INDICATED.

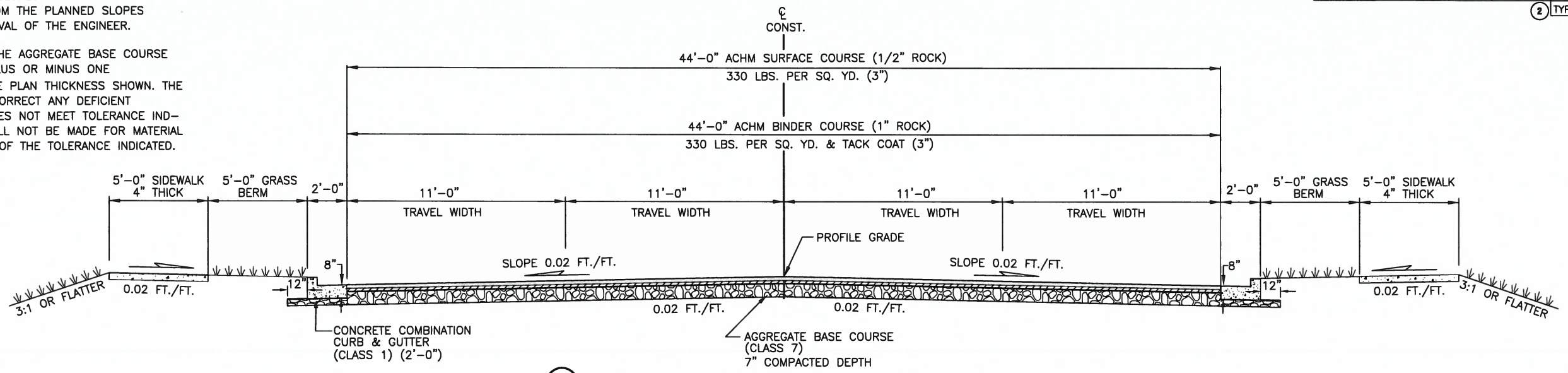

(1) TYPICAL SECTION OF IMPROVEMENT GEYER SPRINGS ROAD STA. 0+00.00 TO STA. 1+48.12

SCALE: 1"=3'

** NOTE: SIDEWALK TAPERS FROM 5' TO 6' STA. 5+72.26

* NOTE: GRASS BERM TAPERS FROM 5' TO 0' FROM STA. 5+97.74 TO STA. 6+14.27

** NOTE: SIDEWALK TAPERS FROM 5' TO 6' STA 6+02.36

* NOTE: GRASS BERM TAPERS FROM 5' TO 0' FROM STA. 6+21.85 TO STA. 6+34.43

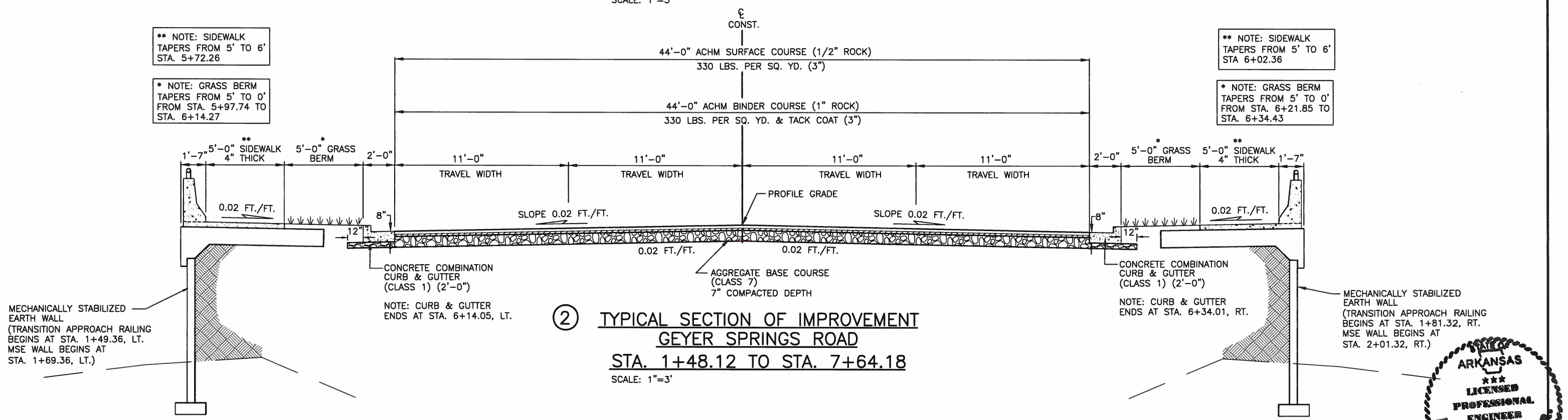

(2) TYPICAL SECTION OF IMPROVEMENT GEYER SPRINGS ROAD STA. 1+48.12 TO STA. 7+64.18

SCALE: 1"=3'

(3) TYPICAL SECTION OF IMPROVEMENT GEYER SPRINGS ROAD BRIDGE SECTION STA. 6+24.22 TO STA. 7+64.18 (SEE SHEET 6)

STATE OF ARKANSAS ★★★ LICENSED PROFESSIONAL ENGINEER ★★★ No. 13265 Leon Dale Burch 6/13/17

MEHLBURGER BRAWLEY
10 N. SHACKLEFORD PLAZA, SUITE 104
LITTLE ROCK, ARKANSAS 72211
(501) 375-5331 - FAX (501) 398-6481
CA # 2532 EXPIRES 12/31/17

GEYER SPRINGS OVERPASS
ROUTE SEC.
CITY OF LITTLE ROCK
LITTLE ROCK, ARK

DRAWN BY: CDP DATE: 10/22/15 FILENAME: TYPICAL SECTIONS
CHECKED BY: DB DATE: 10/22/15 SCALE: 1" = 3'
DESIGNED BY: MB DATE: 10/22/15

BRIDGE ENGINEER

BRIDGE NO. — DRAWING NO.

DATE REVISED	DATE FILMED	DATE REVISED	DATE FILMED	FED. RD. DIST. NO.	STATE	FED. AID PROJ. NO.	SHEET NO.	TOTAL SHEETS
10/22/15		1/16/17		6	AR			
2/19/16		6/13/17		JOB No.		060907	4	67
5/19/16								

(2) TYPICAL SECTIONS

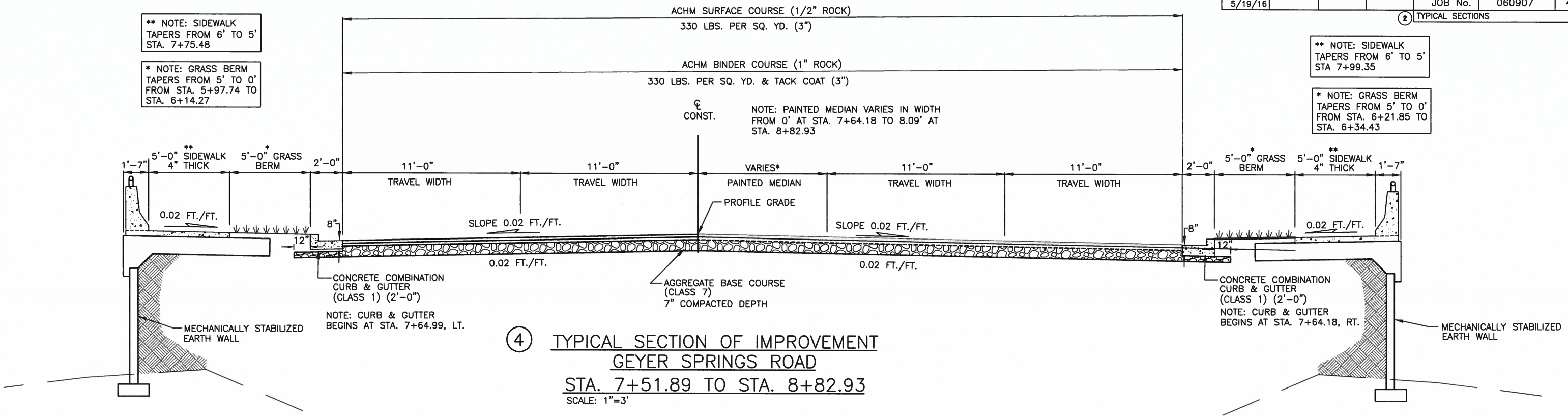

(4) TYPICAL SECTION OF IMPROVEMENT
GEYER SPRINGS ROAD
STA. 7+51.89 TO STA. 8+82.93
SCALE: 1"=3'

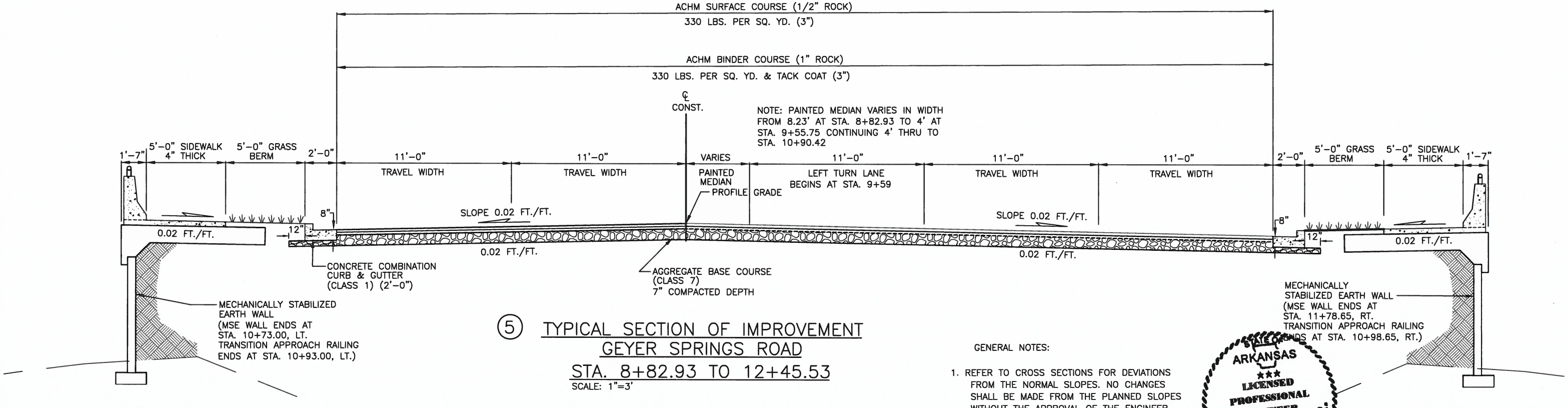

(5) TYPICAL SECTION OF IMPROVEMENT
GEYER SPRINGS ROAD
STA. 8+82.93 TO 12+45.53
SCALE: 1"=3'

NOTE: PAVEMENT WIDTH VARIES:
59' AT STA. 10+90.42
65.84' AT STA. 12+45.53

GENERAL NOTES:

1. REFER TO CROSS SECTIONS FOR DEVIATIONS FROM THE NORMAL SLOPES. NO CHANGES SHALL BE MADE FROM THE PLANNED SLOPES WITHOUT THE APPROVAL OF THE ENGINEER.

2. THE THICKNESS OF THE AGGREGATE BASE COURSE SHALL BE WITHIN PLUS OR MINUS ONE INCH(25mm) OF THE PLAN THICKNESS SHOWN. THE CONTRACTOR WILL CORRECT ANY DEFICIENT THICKNESS THAT DOES NOT MEET TOLERANCE INDICATED. PAYMENT WILL NOT BE MADE FOR MATERIAL PLACED IN EXCESS OF THE TOLERANCE INDICATED.

STATE OF ARKANSAS
LICENSED PROFESSIONAL ENGINEER
No. 13363
Leon Dale Burke Jr.
6/13/17

BRIDGE ENGINEER

MEHLBURGER BRAWLEY
10 N. SHACKLEFORD PLAZA, SUITE 104
LITTLE ROCK, ARKANSAS 72211
(501) 375-5331 - FAX (501) 398-6481
CA # 2532 EXPIRES 12/31/17

GEYER SPRINGS OVERPASS
ROUTE SEC.
CITY OF LITTLE ROCK
LITTLE ROCK, ARK

DRAWN BY: CDP DATE: 10/22/15
CHECKED BY: DB DATE: 10/22/15
DESIGNED BY: MB DATE: 10/22/15
FILENAME: TYPICAL SECTIONS
SCALE: 1" = 3'
BRIDGE NO. — DRAWING NO.

DATE REVISED	DATE FILMED	DATE REVISED	DATE FILMED	FED. RD. DIST. NO.	STATE	FED. AID PROJ. NO.	SHEET NO.	TOTAL SHEETS
10/22/15		1/16/17		6	AR			
2/19/16		6/13/17		JOB No.		060907	5	67
5/19/16								

(2) TYPICAL SECTIONS

NOTE: LEFT LANE VARIES FROM A WIDTH OF 0' AT STA. 13+18.07 TO A WIDTH OF 11' AT STA. 11+08.62 THRU STA. 15+49.57

NOTE: PAINTED MEDIAN VARIES IN WIDTH FROM 12.50' AT STA. 12+70 TO 14.5' AT STA. 15+49.57

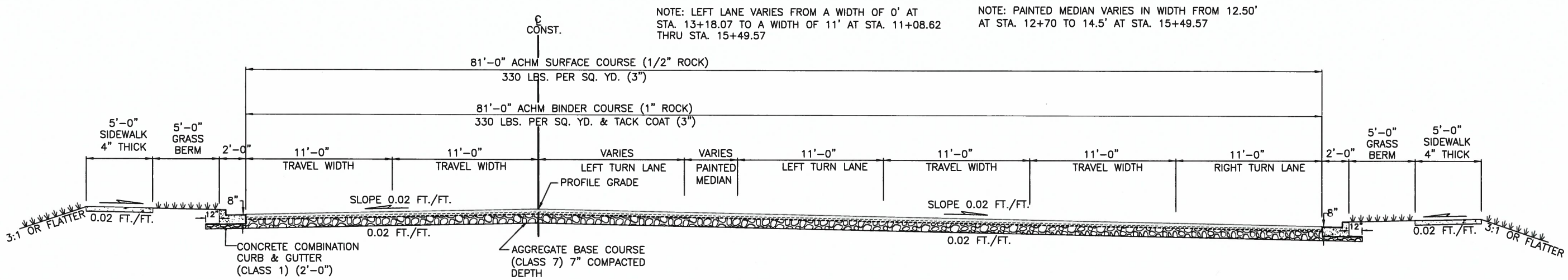

(6) TYPICAL SECTION OF IMPROVEMENT
GEYER SPRINGS ROAD
STA. 12+45.53 TO 15+49.57

SCALE: 1"=4'

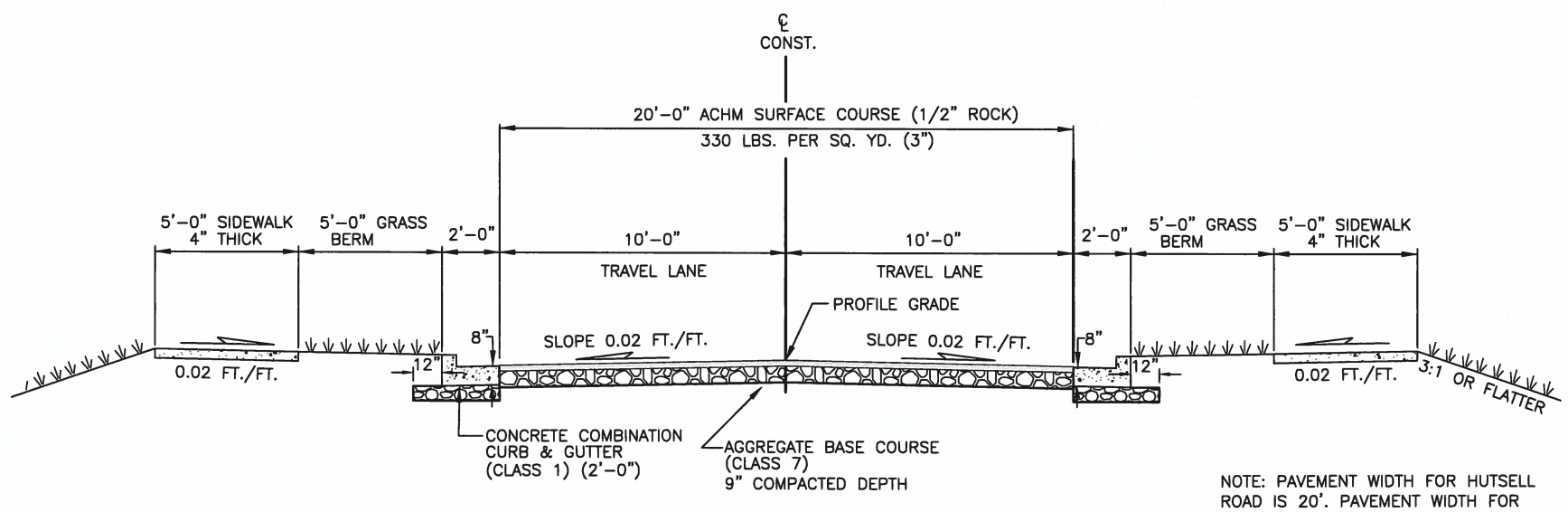

NOTE: PAVEMENT WIDTH FOR HUTSELL ROAD IS 20'. PAVEMENT WIDTH FOR FROZEN ROAD IS 40.26'

(7) TYPICAL SECTION OF IMPROVEMENT
HUTSELL & FROZEN ROAD
STA. 0+40.05 GEYER SPRINGS ROAD & HUTSELL ROAD
STA. 11+42.59 GEYER SPRINGS ROAD & FROZEN ROAD

SCALE: 1"=3'

GENERAL NOTES:

1. REFER TO CROSS SECTIONS FOR DEVIATIONS FROM THE NORMAL SLOPES. NO CHANGES SHALL BE MADE FROM THE PLANNED SLOPES WITHOUT THE APPROVAL OF THE ENGINEER.
2. THE THICKNESS OF THE AGGREGATE BASE COURSE SHALL BE WITHIN PLUS OR MINUS ONE INCH(25mm) OF THE PLAN THICKNESS SHOWN. THE CONTRACTOR WILL CORRECT ANY DEFICIENT THICKNESS THAT DOES NOT MEET TOLERANCE INDICATED. PAYMENT WILL NOT BE MADE FOR MATERIAL PLACED IN EXCESS OF THE TOLERANCE INDICATED.

MEHLBURGER BRAWLEY
10 N. SHACKLEFORD PLAZA, SUITE 104
LITTLE ROCK, ARKANSAS 72211
(501) 375-5331 - FAX (501) 398-6481
CA # 2532 EXPIRES 12/31/17

STATE OF ARKANSAS ★★★ LICENSED PROFESSIONAL ENGINEER ★★★ No. 13985 Leo Louis Brawley Jr. 6/13/17

GEYER SPRINGS OVERPASS
ROUTE SEC.
CITY OF LITTLE ROCK
LITTLE ROCK, ARK

DRAWN BY:	CDP	DATE:	10/22/15	FILENAME:	TYPICAL SECTIONS
CHECKED BY:	DB	DATE:	10/22/15	SCALE:	NTS
DESIGNED BY:	MB	DATE:	10/22/15		

BRIDGE NO. — DRAWING NO.

DATE REVISED	DATE FILMED	DATE REVISED	DATE FILMED
10/22/15		1/16/17	
2/19/16		6/13/17	
5/19/16			

FED. ROAD DIST. NO.	STATE	FED. AID PROJ. NO.	SHEET NO.	TOTAL SHEETS
6	ARK			
JOB No.		060907	6	67

(1) BRIDGE CROSS SECTION

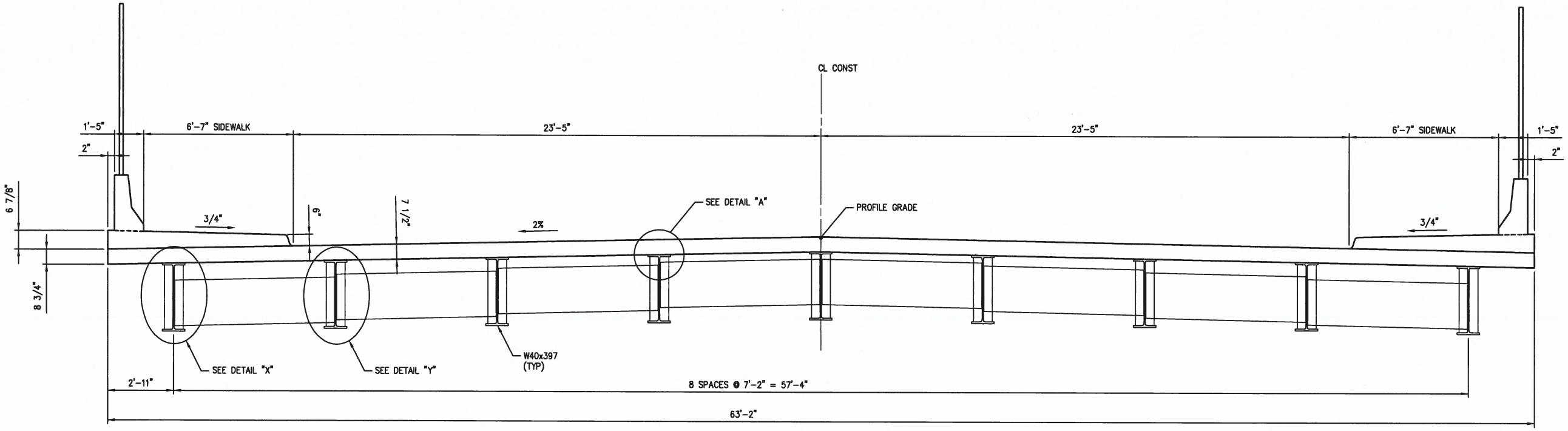

TYPICAL SECTION OF IMPROVEMENT
GEYER SPRINGS ROAD
BRIDGE SECTION (STA. 6+24.22 TO 7+64.18)

MEHLBURGER BRAWLEY
10 N. SHACKLEFORD PLAZA, SUITE 104
LITTLE ROCK, ARKANSAS 72211
(501) 375-5331 - FAX (501) 398-6481
CA # 2532 EXPIRES 12/31/17

STATE OF ARKANSAS
LICENSED PROFESSIONAL ENGINEER
No. 15305
Leon Dale Burke, Jr.

6/13/17

BRIDGE ENGINEER

GEYER SPRINGS OVERPASS (BR9)
ROUTE SEC.
CITY OF LITTLE ROCK
LITTLE ROCK, ARK

DRAWN BY: CDP DATE: 10/22/15
CHECKED BY: SAP DATE: 10/22/15
DESIGNED BY: ISG DATE: 10/22/15
FILENAME: BRIDGE CROSS SECTION
SCALE: NTS

BRIDGE NO. — DRAWING NO.

DATE REVISED	DATE FILMED	DATE REVISED	DATE FILMED	FED. RD. DIST. NO.	STATE	FED. AID PROJ. NO.	SHEET NO.	TOTAL SHEETS
10/22/15		1/16/17		6	AR			
2/19/16		6/13/17		JOB No.		060907	7	67
5/19/16								

(2) SPECIAL DETAILS

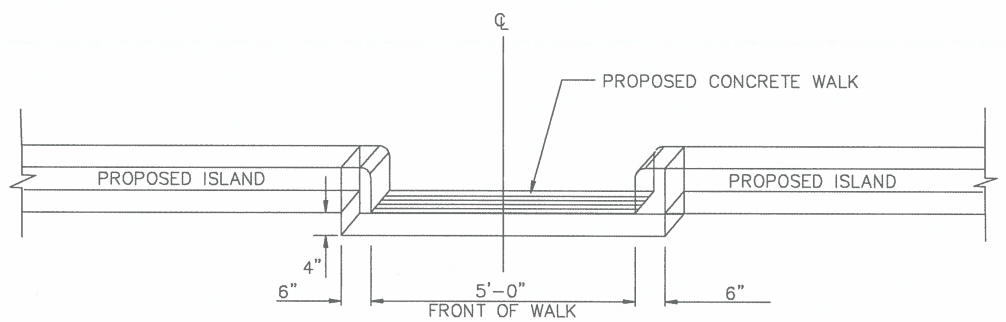

FACE SHALL MEET REQUIREMENTS
OF TYPE B CURB

NOTE: CONCRETE WALK THROUGH ISLAND SHALL BE POURED MONOLITHICALLY. ALL MATERIALS REQUIRED TO CONSTRUCT CONCRETE WALK THRU ISLAND SHALL BE INCLUDED IN THE PRICE BID FOR CONCRETE ISLAND.

CONCRETE WALK THROUGH ISLAND

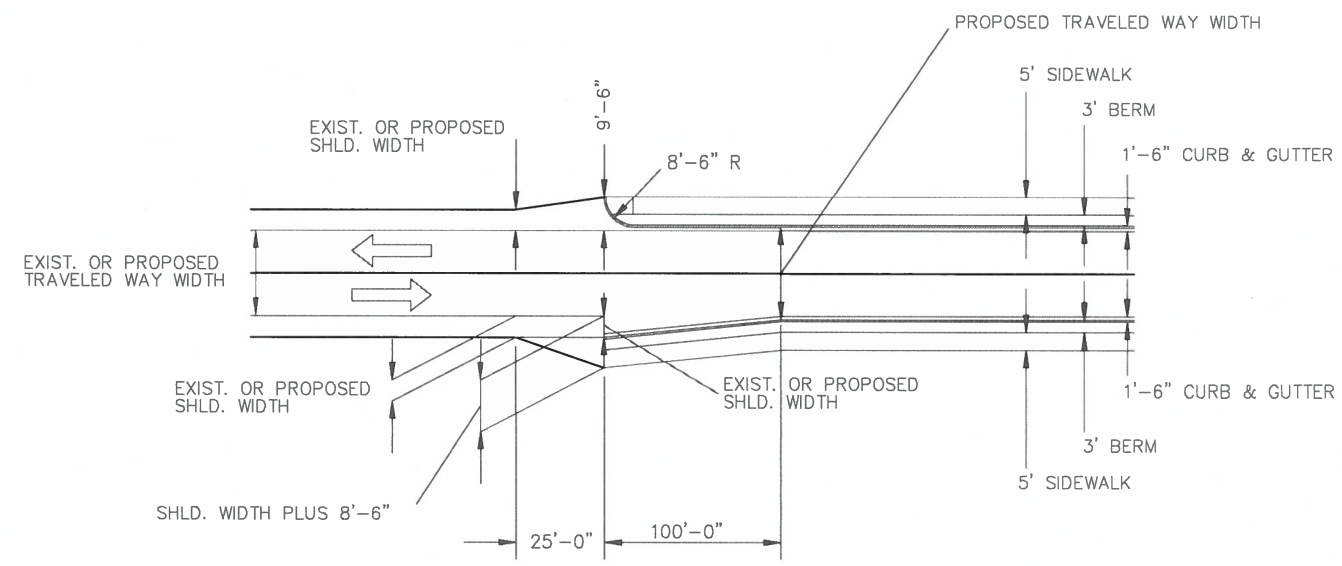

TRANSITION FROM OPEN SHOULDER TO CURB & GUTTER SECTION

MEHLBURGER BRAWLEY
10 N. SHACKLEFORD PLAZA, SUITE 104
LITTLE ROCK, ARKANSAS 72211
(501) 375-5331 - FAX (501) 398-6481
CA # 2532 EXPIRES 12/31/17

STATE OF ARKANSAS
LICENSED PROFESSIONAL ENGINEER
No. 13965
Leon Dale Burke, Jr.
6/13/17
BRIDGE ENGINEER

GEYER SPRINGS OVERPASS
ROUTE SEC.
CITY OF LITTLE ROCK
LITTLE ROCK, ARK

DRAWN BY: CDP DATE: 10/22/15
CHECKED BY: DB DATE: 10/22/15
DESIGNED BY: MB DATE: 10/22/15
FILENAME: SPECIAL DETAILS
SCALE: NTS

BRIDGE NO. — DRAWING NO.

DATE REVISED	DATE FILMED	DATE REVISED	DATE FILMED	FED. RD. DIST. NO.	STATE	FED. AID PROJ. NO.	SHEET NO.	TOTAL SHEETS
10/22/15		1/16/17		6	AR			
2/19/16		6/13/17		JOB No.		060907	8	67
5/19/16								

(2) SPECIAL DETAILS

TITLE	Issue Date	PW-1A Revision Date
RECTANGULAR CURB INLET WITH THROAT EXTENSIONS	APR 2015	

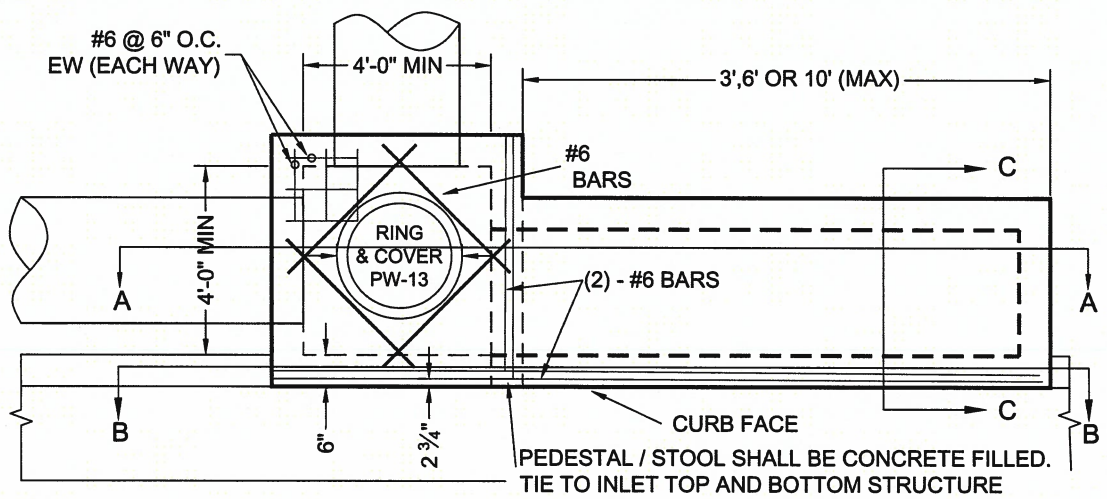

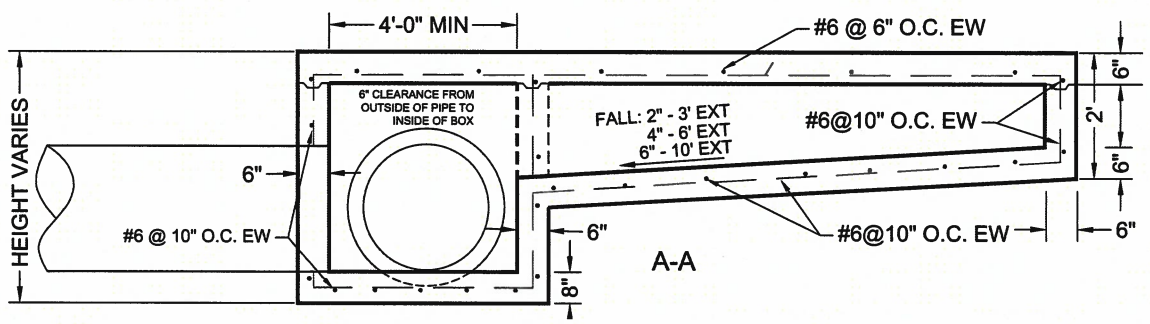

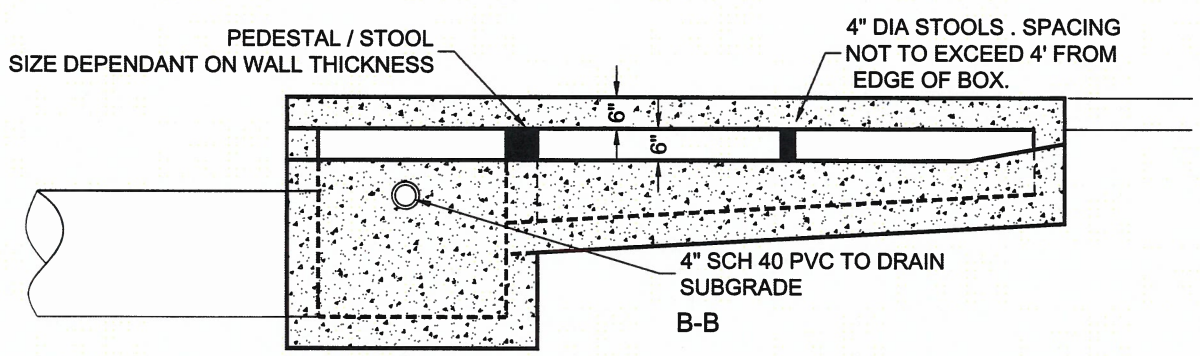

TITLE	Issue Date	PW-1A Revision Date
RECTANGULAR CURB INLET WITH THROAT EXTENSIONS	APR 2015	

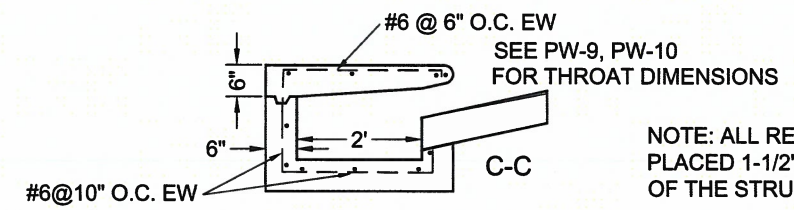

NOTE: ALL REINFORCING TO BE PLACED 1-1/2" CLEAR TO THE INSIDE OF THE STRUCTURE.

NOTE:

PRE-CAST STRUCTURES ARE ALLOWED. IT SHALL BE THE CONTRACTOR'S RESPONSIBILITY TO ASSURE COMPLIANCE OF PRE-CAST STRUCTURES TO STANDARD DESIGN DETAILS AND PLAN CONFIGURATIONS.

STATE OF ARKANSAS
LICENSED PROFESSIONAL ENGINEER
No. 13365
Leon Dale Burke, JR.
6/13/17
BRIDGE ENGINEER

GEYER SPRINGS OVERPASS
ROUTE SEC.
CITY OF LITTLE ROCK
LITTLE ROCK, ARK

DRAWN BY: CDP DATE: 10/22/15 FILENAME: SPECIAL DETAILS
CHECKED BY: DB DATE: 10/22/15 SCALE: NTS
DESIGNED BY: MB DATE: 10/22/15
DRAWING NO.

MEHLBURGER BRAWLEY
10 N. SHACKLEFORD PLAZA, SUITE 104
LITTLE ROCK, ARKANSAS 72211
(501) 375-5331 - FAX (501) 398-6481
CA # 2532 EXPIRES 12/31/17

DATE REVISED	DATE FILMED	DATE REVISED	DATE FILMED	FED. RD. DIST. NO.	STATE	FED. AID PROJ. NO.	SHEET NO.	TOTAL SHEETS
10/22/15		1/16/17		6	AR			
2/19/16		6/13/17		JOB No.		060907	9	67
5/19/16								

(2) SPECIAL DETAILS

TITLE	Issue Date	PW-3 Revision Date
GUTTER DEPRESSION DETAIL TYPICAL DEPRESSION IS 4"	02/15	APR 2015

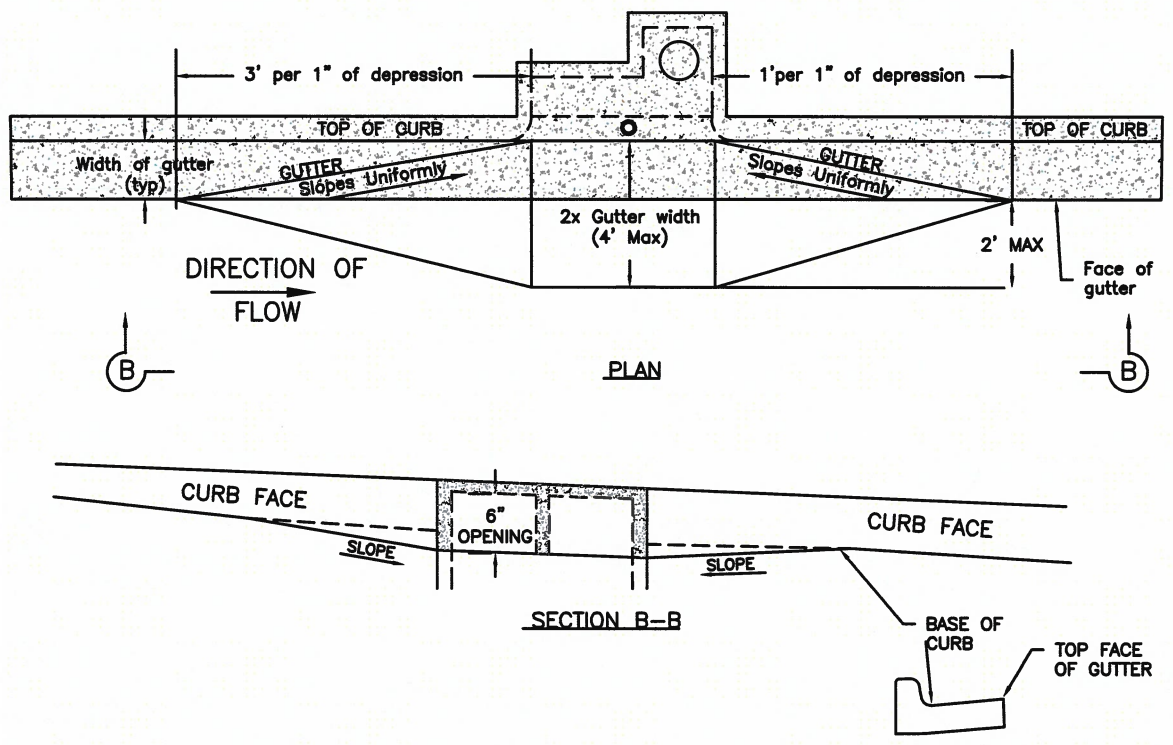

NOTE: LOW POINT /(SAG) INLETS : SLOPE SHALL BE 1 FT PER 1" OF DEPRESSION BOTH SIDES

GUTTER DEPRESSION DETAIL

NOTE: THE TOP FACE OF GUTTER SHALL DROP 1/2 OF THE GUTTER DEPRESSION ACROSS THE INLET OPENING.

TITLE	Issue Date	PW-4 Revision Date
HEAD WALL DETAIL	APR 2015	

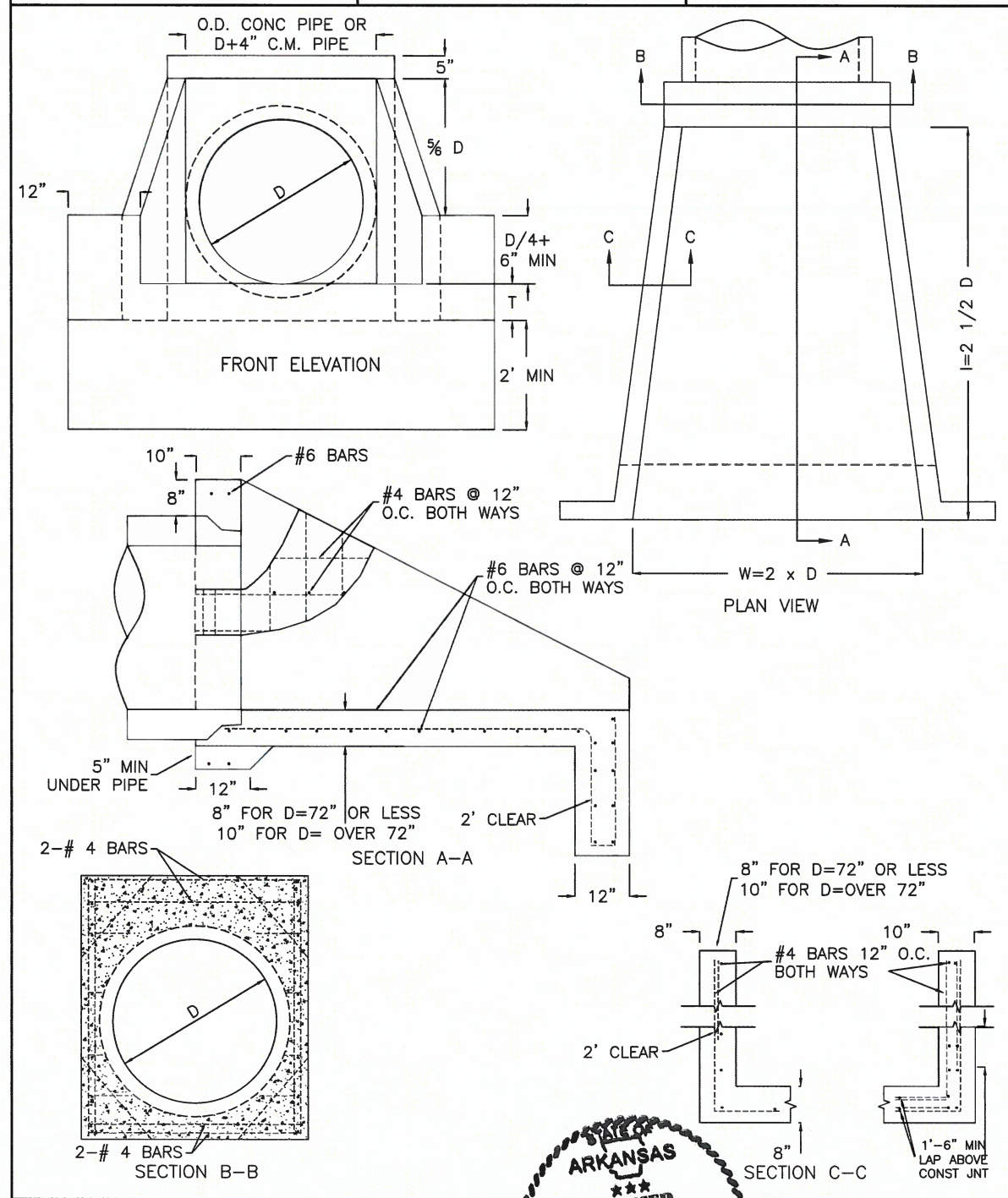

STATE OF ARKANSAS LICENSED PROFESSIONAL ENGINEER No. 13365 Leon Dale Butler, JR.

6/13/17

BRIDGE ENGINEER

GEYER SPRINGS OVERPASS

ROUTE SEC.

CITY OF LITTLE ROCK

LITTLE ROCK, ARK

DRAWN BY: CDP	DATE: 10/22/15	FILENAME: SPECIAL DETAILS	
CHECKED BY: DB	DATE: 10/22/15	SCALE: NTS	
DESIGNED BY: MB	DATE: 10/22/15		
BRIDGE NO. —		DRAWING NO.	

MEHLBURGER BRAWLEY
10 N. SHACKLEFORD PLAZA, SUITE 104
LITTLE ROCK, ARKANSAS 72211
(501) 375-5331 - FAX (501) 398-6481
CA # 2532 EXPIRES 12/31/17

DATE REVISED	DATE FILMED	DATE REVISED	DATE FILMED	FED. RD. DIST. NO.	STATE	FED. AID PROJ. NO.	SHEET NO.	TOTAL SHEETS
10/22/15		1/16/17		6	AR			
2/19/16		6/13/17		JOB No.		060907	10	67
5/19/16								

(2) SPECIAL DETAILS

TITLE	Issue Date	Revision Date
TYPICAL DRAINAGE INLET THROAT OPENING DETAIL (NOT IN RADIUS)	AUG, 2006	PW-9 APR 2015

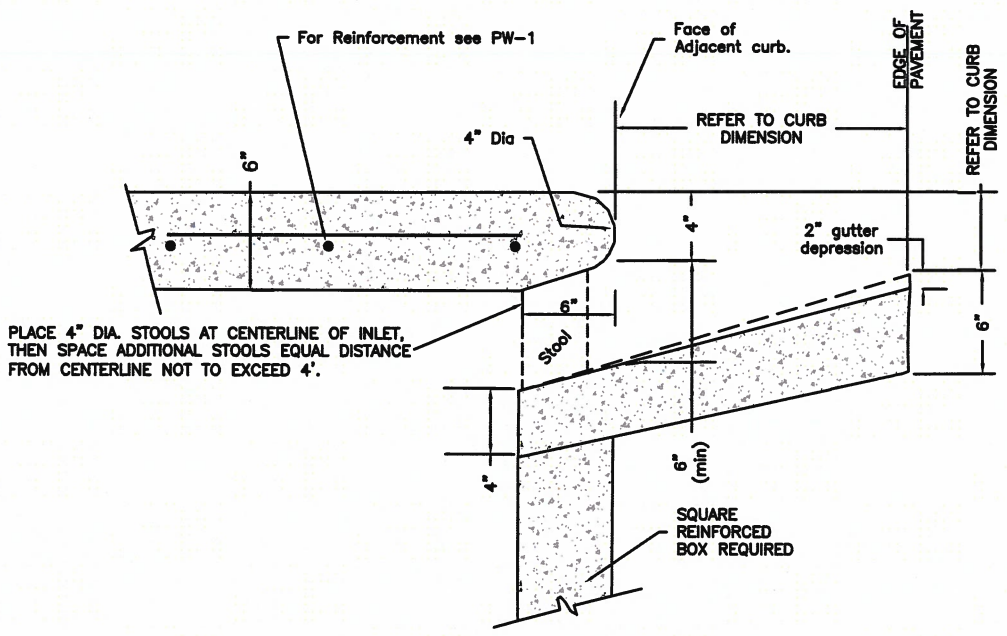

INLET THROAT BETWEEN STOOLS

NOTE: This detail is not to be used for inlets in curb radius.
See PW-10 for detail of inlet top in curb radius.

TITLE	Issue Date	Revision Date
CURB INLET STEPS	AUG, 2006	PW-12 APR 2015

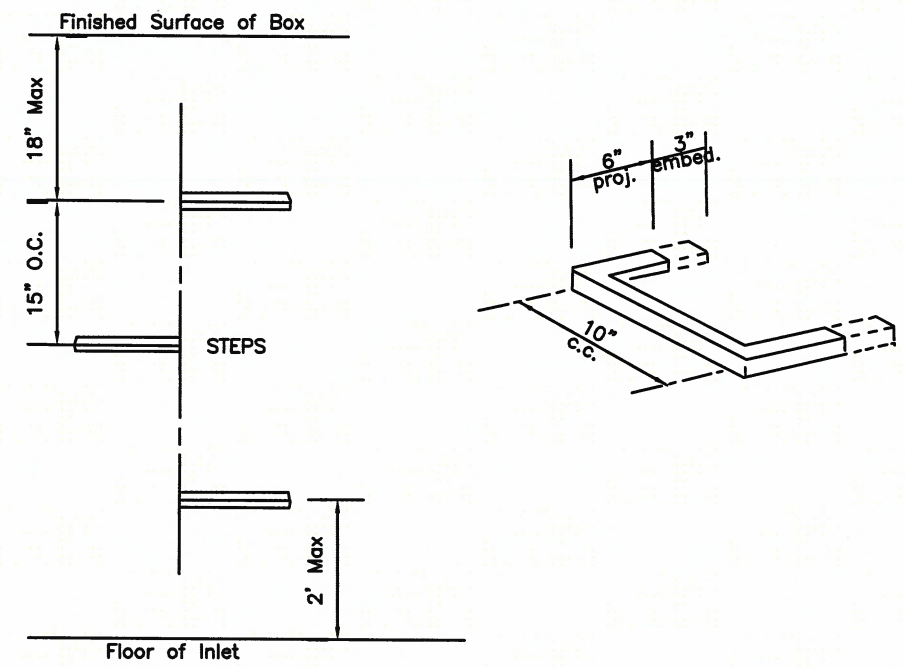

A. Manhole steps: corrosion resistant, coated, and reinforced with steel per ASTM C-478. Steel reinforcing minimum 1/2" diameter.

B. Acceptable Manufacturers:

1. Utility Products Inc. Perma Step 100-2
2. ICM Inc. Polypropylene coated steps.
3. M.A Industries, Inc. Polypropylene coated steps. #PSI-PF
4. BOWCO, by H. Bowen Co.

C. Capable of supporting minimum 300 lb. load.

D. Non-Slip textured treads.

E. Required in all structures 3'-0" deep or greater.

STATE OF ARKANSAS LICENSED PROFESSIONAL ENGINEER No. 13343 Leon Dale Burks Jr.
BRIDGE ENGINEER
6/13/17

MEHLBURGER BRAWLEY
10 N. SHACKLEFORD PLAZA, SUITE 104
LITTLE ROCK, ARKANSAS 72211
(501) 375-5331 - FAX (501) 398-6481
CA # 2532 EXPIRES 12/31/17

GEYER SPRINGS OVERPASS
ROUTE SEC.
CITY OF LITTLE ROCK
LITTLE ROCK, ARK

DRAWN BY: CDP DATE: 10/22/15 FILENAME: SPECIAL DETAILS
CHECKED BY: DB DATE: 10/22/15 SCALE: NTS
DESIGNED BY: MB DATE: 10/22/15
BRIDGE NO. — DRAWING NO.

DATE REVISED	DATE FILMED	DATE REVISED	DATE FILMED	FED. RD. DIST. NO.	STATE	FED. AID PROJ. NO.	SHEET NO.	TOTAL SHEETS
10/22/15		1/16/17		6	AR			
2/19/16		6/13/17		JOB No.		060907	11	67
5/19/16								

(2) SPECIAL DETAILS

TITLE	Issue Date	PW-13 Revision Date
MANHOLE FRAME & COVER	AUG, 2006	APR 2015

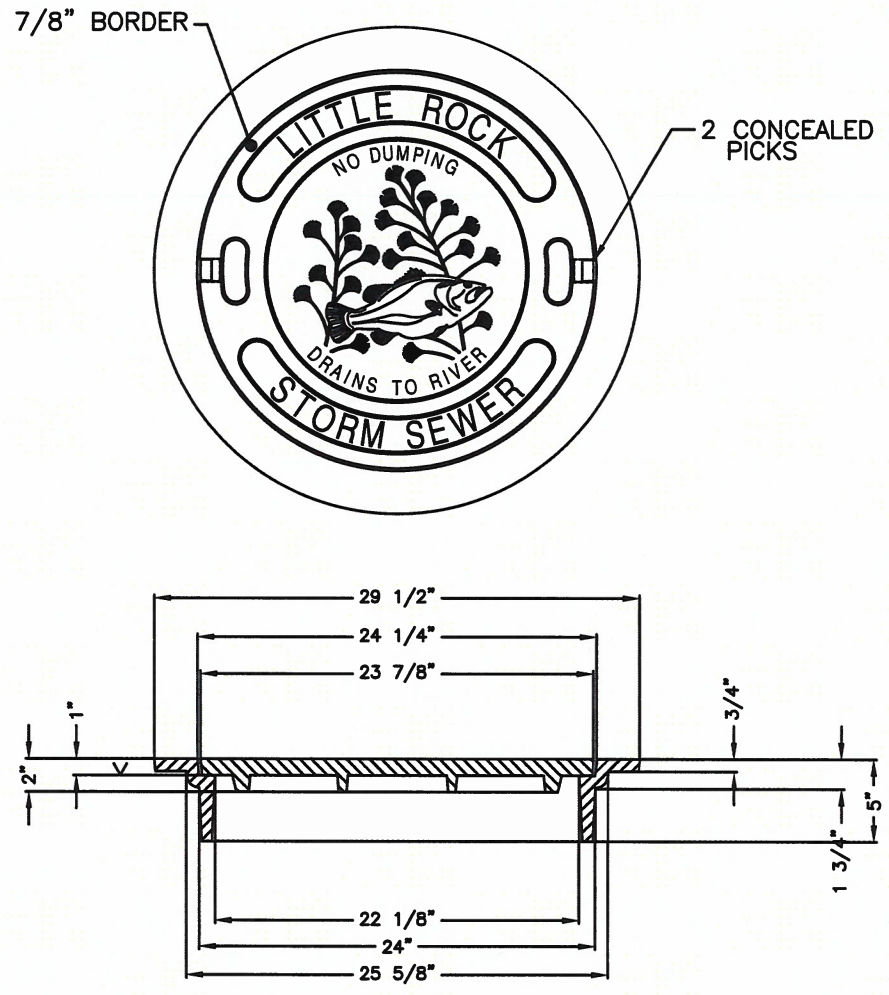

MATERIAL:	CAST GRAY IRON ASTM A-48, CLASS 35B
FINISH:	NO PAINT
WEIGHT:	COVER 140 LBS. FRAME 133 LBS.

NOTE:
1. FURNISHED WITH MACHINED HORIZONTAL BEARING SURFACES.

ITEM:
1. #2018-A (ENVIRONMENTAL) AS MANUFACTURED BY DEETER FOUNDARY, INC. OR EAST JORDAN 2750A MANHOLE COVER (275-24) WITH ABOVE LETTERING, OR APPROVED EQUAL PER ENGINEER.

TITLE	Issue Date	PW-18 Revision Date
PROJECT KIOSK	AUG, 2006	APR 2015

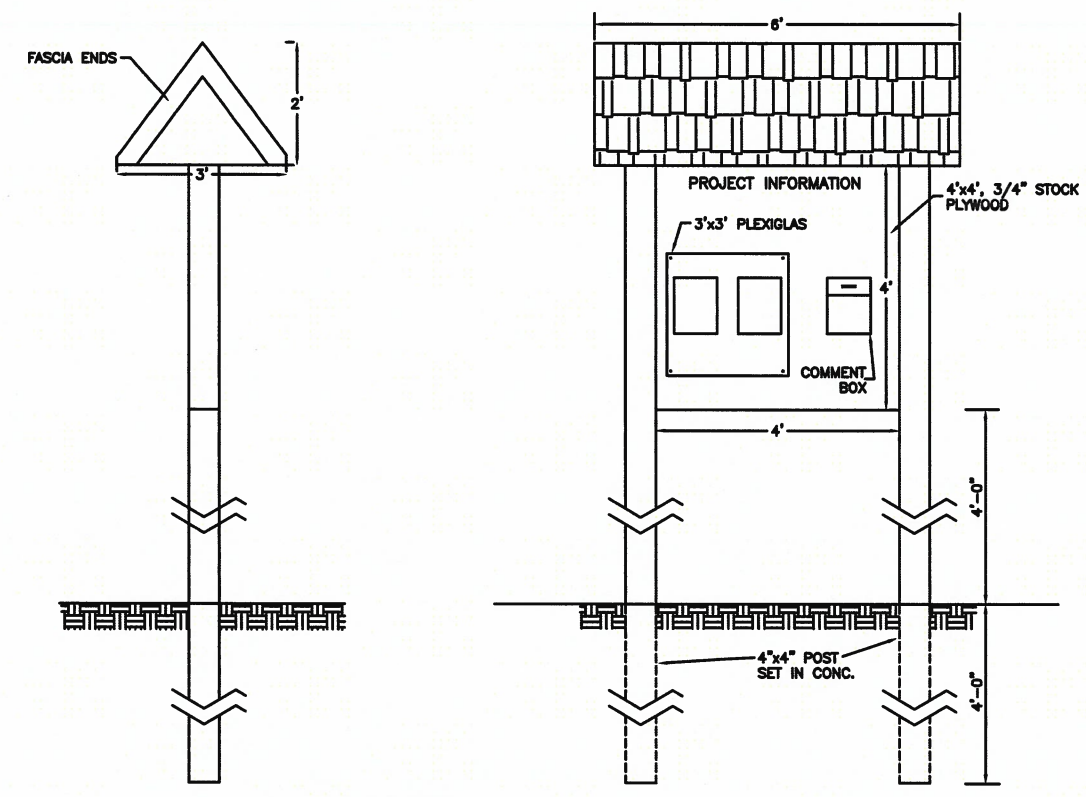

ROOF: 1/2" BOARD SHEATHING
RAFTERS ON 24" C-C (2"x4" HORIZONTAL)

SHINGLES: 3-TAB SQUARE BUTT (100 LB)
OR ROLL ROOFING (MINERAL SURFACED)
ROOFING FELT (15-LB)

PAINT: (ALL EXPOSED WOOD SHALL BE PAINTED)
LIGHT GREY, DARK ROOF
INCLUDING UNDER EAVES.

KIOSK TO BE PLACED ON PROJECT
AS DIRECTED BY THE ENGINEER.
OR AS SHOWN ON PLANS.

STATE OF ARKANSAS ★★★ LICENSED PROFESSIONAL ENGINEER ★★★ No. 13205 Leon Dale Butler

6/13/17
BRIDGE ENGINEER

GEYER SPRINGS OVERPASS
ROUTE SEC.
CITY OF LITTLE ROCK
LITTLE ROCK, ARK

DRAWN BY: CDP DATE: 10/22/15
CHECKED BY: DB DATE: 10/22/15
DESIGNED BY: MB DATE: 10/22/15
FILENAME: SPECIAL DETAILS
SCALE: NTS
BRIDGE NO. — DRAWING NO.

MEHLBURGER BRAWLEY
10 N. SHACKLEFORD PLAZA, SUITE 104
LITTLE ROCK, ARKANSAS 72211
(501) 375-5331 - FAX (501) 398-6481
CA # 2532 EXPIRES 12/31/17

DATE REVISED	DATE FILMED	DATE REVISED	DATE FILMED	FED. RD. DIST. NO.	STATE	FED. AID PROJ. NO.	SHEET NO.	TOTAL SHEETS
10/22/15		1/16/17		6	AR			
2/19/16		6/13/17		JOB No.		060907	12	67
5/19/16								

(2) SPECIAL DETAILS

TITLE	Issue Date	PW–26 Revision Date
DRAINAGE PIPE BACKFILL	AUG, 2006	APR 2015

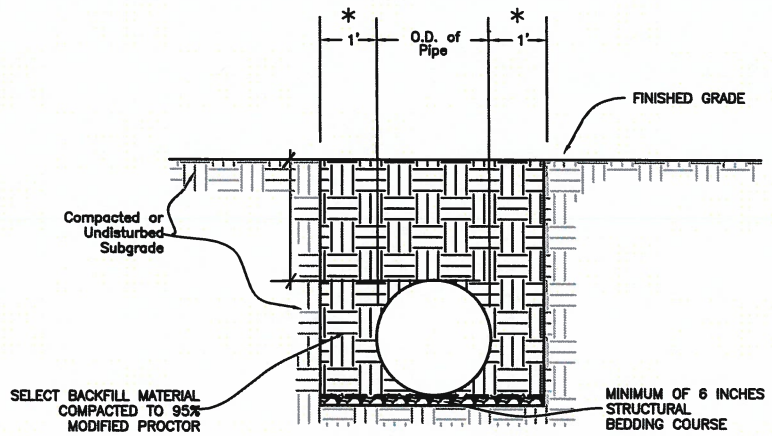

RIGID PIPE SIDE DRAIN
(REINFORCED CONCRETE PIPE)

OUTSIDE ROADWAY / SIDE DRAIN BEDDING

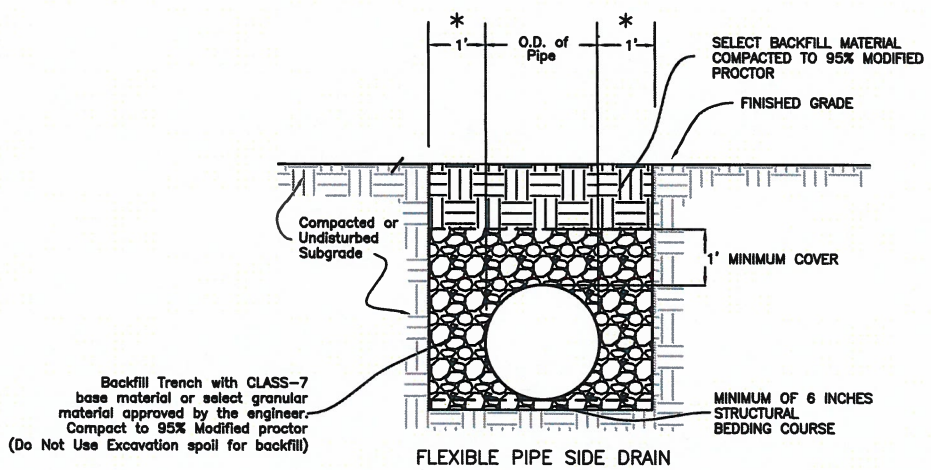

FLEXIBLE PIPE SIDE DRAIN
(HIGH DENSITY POLYETHYLENE
HIGH DENSITY POLYPROPYLENE)

OUTSIDE ROADWAY / SIDE DRAIN BEDDING

* SEE PUBLIC WORKS STANDARD SPECIFICATIONS FOR TRENCH WIDTH AND DEPTH REQUIRED FOR STORM DRAIN APPLICATIONS.

TITLE	Issue Date	PW–26 Revision Date
DRAINAGE PIPE BACKFILL	AUG, 2006	APR 2015

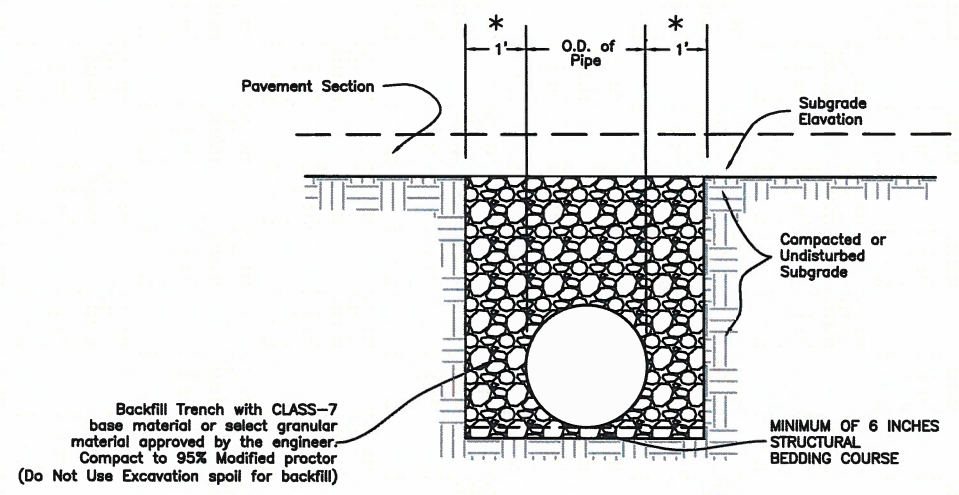

NOTE: Backfill above crown may be select backfill when approved by Public Works Department with density testing, two–year maintenence bond. See (PW–27)

UNDER ROADWAY / CROSS DRAIN BEDDING

* SEE PUBLIC WORKS STANDARD SPECIFICATIONS FOR TRENCH WIDTH AND DEPTH REQUIRED FOR STORM DRAIN APPLICATIONS.

STATE OF ARKANSAS
LICENSED PROFESSIONAL ENGINEER
No. 15365
Leon Dale Burks Jr.
6/13/17
BRIDGE ENGINEER

MEHLBURGER BRAWLEY
10 N. SHACKLEFORD PLAZA, SUITE 104
LITTLE ROCK, ARKANSAS 72211
(501) 375-5331 - FAX (501) 398-6481
CA # 2532 EXPIRES 12/31/17

GEYER SPRINGS OVERPASS
ROUTE SEC.
CITY OF LITTLE ROCK
LITTLE ROCK, ARK

DRAWN BY: CDP DATE: 10/22/15
CHECKED BY: DB DATE: 10/22/15
DESIGNED BY: MB DATE: 10/22/15
FILENAME: SPECIAL DETAILS
SCALE: NTS

BRIDGE NO. – DRAWING NO.

DATE REVISED	DATE FILMED	DATE REVISED	DATE FILMED	FED. RD. DIST. NO.	STATE	FED. AID PROJ. NO.	SHEET NO.	TOTAL SHEETS
10/22/15		1/16/17		6	AR			
2/19/16		6/13/17		JOB No.		060907	13	67
5/19/16								

(2) SPECIAL DETAILS

PUBLIC WORKS · CITY OF LITTLE ROCK

TITLE

TRENCH BACKFILL REQUIREMENTS (NEW STREETS)

PW–27

Issue Date JAN, 2003

Revision Date APR 2015

The City will allow Contractor to backfill utility and stormdrain installations under a planned new street with select material or approved borrow material providing Engineer of Record and Contractor comply with following:

* Engineer of Record must submit a request in writing to Department of Public Works. Letter must note agreement with conditions of this memorandum.

* Trench backfill with other than aggregate per current City standard is not allowed in cuts of existing street, on projects where street construction is a partial widening (boundary street widening), or a street extension less than 300 feet in length. Locations must be approved prior to start of construction.

* A one year maintenance bond shall be provided and shall cover all construction associated with project (curbs, base, ACHM surface, drainage inlets, storm drain, sidewalks, and other improvements in right–of–way).

* Trenches shall be a minimum of eighteen inches in width to allow for proper compaction.

* Aggregate material (Class 7) shall be placed to subgrade elevation per PW–25.

* Material used for backfilling shall be free of frozen material, trash, lumber, broken concrete having a dimension larger that two inches, or other debris. Such material shall be capable of being compacted to a density of not less than ninety–five (95) percent of maximum density, at optimum moisture, obtained in laboratory in accordance with AASHTO–Designation T–180. All tests are to be at expense of Developer or Contractor.

* A letter certifying compaction of backfill in trenches shall be furnished for a minimum of every third lift with eight inch lifts maximum (one test per two feet of fill). Test locations shall be spaced no further than one hundred feet, one per street crossing, or as required by Engineer of Record or City staff.

* Failure to provide satisfactory density testing of backfill for each trench will require one of three options of Contractor: A. Removal and re–compaction with certified testing. B. A maintenance bond for five (5) years shall be furnished for total project. C. A 3000 psi seven inch thick concrete cap two feet wider than trench may be installed below base course similar to Public Works Standard Detail PW–25.

PUBLIC WORKS · CITY OF LITTLE ROCK

TITLE

CURB & GUTTER SECTIONS ARTERIAL STREETS

PW–28

Issue Date AUG, 2006

Revision Date APR 2015

UPRIGHT CLASS I

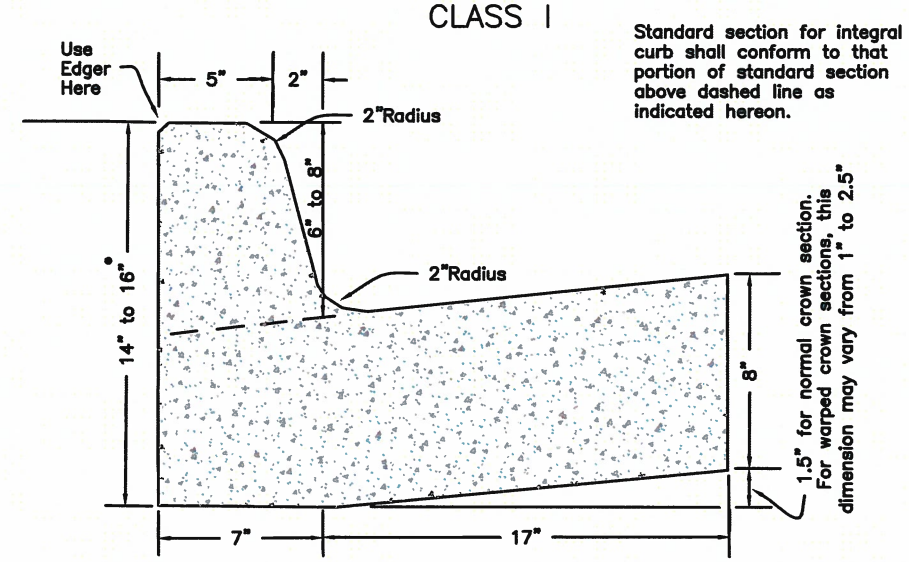

Standard section for integral curb shall conform to that portion of standard section above dashed line as indicated hereon.

Standard section for integral curb shall conform to that portion of standard section above dashed line as indicated hereon.

Install 1/2" Bituminous Expansion Joint Material At 100' Max. Intervals Or At Tie Ins To Boxes, Radius Returns Or Driveway Aprons. Control Joints 15' Max. O.C.

Joint Sealant Shall be Sonneborn SL2 Self Leveling Urethane as Manufactured by Chemrex or Equivalent.

STATE OF ARKANSAS · LICENSED PROFESSIONAL ENGINEER · 15365 · Dale Burke, JR. · BRIDGE ENGINEER

GEYER SPRINGS OVERPASS

ROUTE SEC.

CITY OF LITTLE ROCK

LITTLE ROCK, ARK

DRAWN BY: CDP DATE: 10/22/15

CHECKED BY: DB DATE: 10/22/15

DESIGNED BY: MB DATE: 10/22/15

FILENAME: SPECIAL DETAILS

SCALE: NTS

BRIDGE NO. –

DRAWING NO.

MEHLBURGER BRAWLEY
10 N. SHACKLEFORD PLAZA, SUITE 104
LITTLE ROCK, ARKANSAS 72211
(501) 375-5331 - FAX (501) 398-6481
CA # 2532 EXPIRES 12/31/17

DATE REVISED	DATE FILMED	DATE REVISED	DATE FILMED	FED. RD. DIST. NO.	STATE	FED. AID PROJ. NO.	SHEET NO.	TOTAL SHEETS
10/22/15		1/16/17		6	AR			
2/19/16		6/13/17		JOB No.		060907	14	67
5/19/16								

(2) SPECIAL DETAILS

TITLE	Issue Date	PW-34 Revision Date
RADIUS DRIVEWAY DETAIL FOR COMMERCIAL DRIVEWAYS (SIDEWALK AWAY FROM CURB)	AUG, 2006	APR 2015

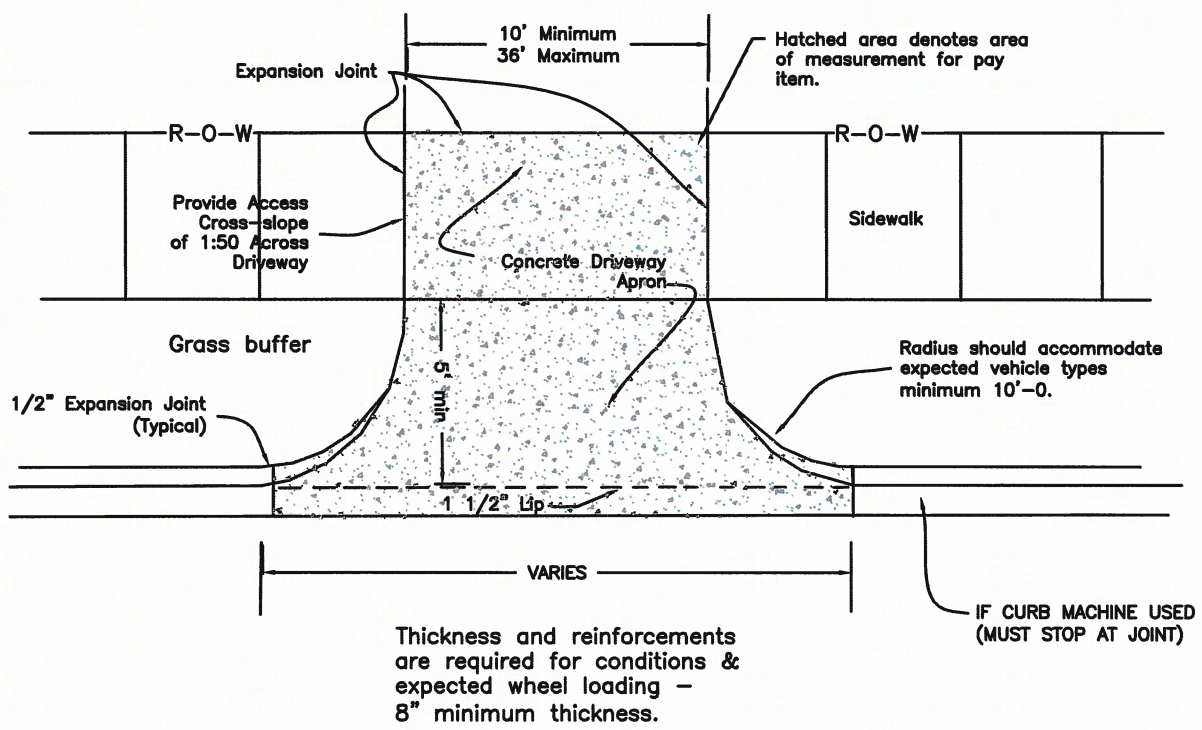

Thickness and reinforcements are required for conditions & expected wheel loading – 8" minimum thickness.

NOTE: Chenal Parkway Design Standards Required for Commercial Drives on Chenal Parkway. (See Master Street Plan)

DRIVEWAY GRADES SHALL BE DESIGNED BY ENGINEER TO KEEP STORMWATER IN STREET, 2% MINIMUM SLOPE AT SIDEWALK CROSSING, MAXIMUM % OF GRADE CHANGE IS 16.

TITLE	Issue Date	PW-36 Revision Date
DRIVEWAY MAXIMUM GRADE DETAIL A	AUG, 2006	MAR 2016

MAXIMUM GRADES FOR DRIVEWAY WITH ABUTTING 5' SIDEWALK WHICH IS 5' OFF BACK OF CURB

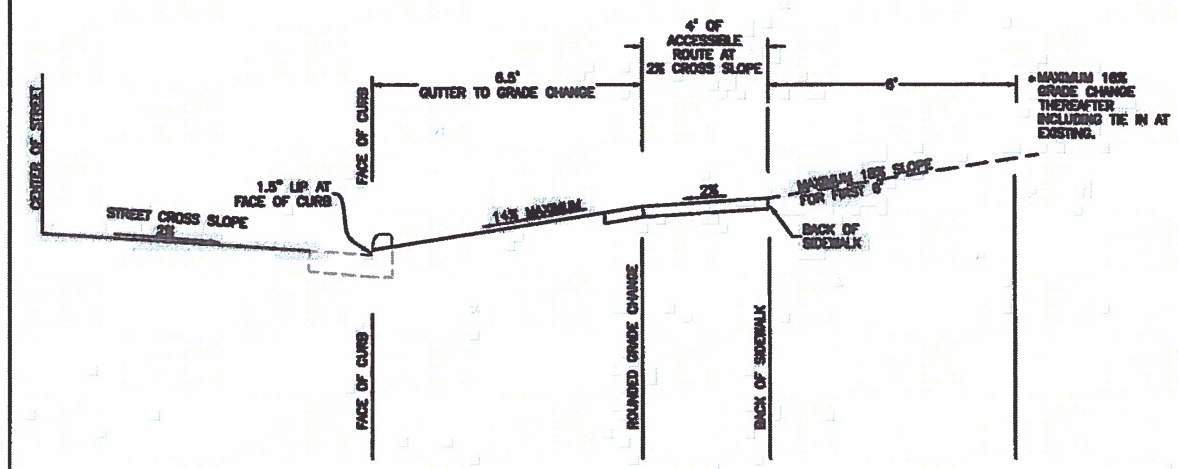

NOTE: 1. ALL GRADE CHANGES SHALL BE ROUNDED OFF WITH A 2' RADIUS.
2. THE MAXIMUM GRADE CHANGE SHALL NOT EXCEED 16%.
3. GRADES SHOWN ARE THE MAXIMUM ALLOWED TO AVOID DRAGGING A VEHICLE. THE GRADES SHALL NOT BE DESIGNED OR USED EXCEPT IN EXTREME CONDITIONS.

STATE OF ARKANSAS
LICENSED PROFESSIONAL ENGINEER
No. 13065
Leon Dale Burke, JR.
6/13/17
BRIDGE ENGINEER

MEHLBURGER BRAWLEY
10 N. SHACKLEFORD PLAZA, SUITE 104
LITTLE ROCK, ARKANSAS 72211
(501) 375-5331 - FAX (501) 398-6481
CA # 2532 EXPIRES 12/31/17

GEYER SPRINGS OVERPASS
ROUTE SEC.
CITY OF LITTLE ROCK
LITTLE ROCK, ARK

DRAWN BY: CDP DATE: 10/22/15
CHECKED BY: DB DATE: 10/22/15
DESIGNED BY: MB DATE: 10/22/15
FILENAME: SPECIAL DETAILS
SCALE: NTS
BRIDGE NO. – DRAWING NO.

DATE REVISED	DATE FILMED	DATE REVISED	DATE FILMED	FED. RD. DIST. NO.	STATE	FED. AID PROJ. NO.	SHEET NO.	TOTAL SHEETS
10/22/15		1/16/17		6	AR			
2/19/16		6/13/17		JOB No.		060907	15	67
5/19/16								

(2) SPECIAL DETAILS

PUBLIC WORKS · CITY OF LITTLE ROCK

TITLE
DRIVEWAY
MAXIMUM GRADES
DETAIL B

Issue Date: AUG, 2006

PW-37
Revision Date: MAR 2016

MAXIMUM GRADES FOR DRIVEWAY WITH ABUTTING 5' SIDEWALK AT BACK OF CURB

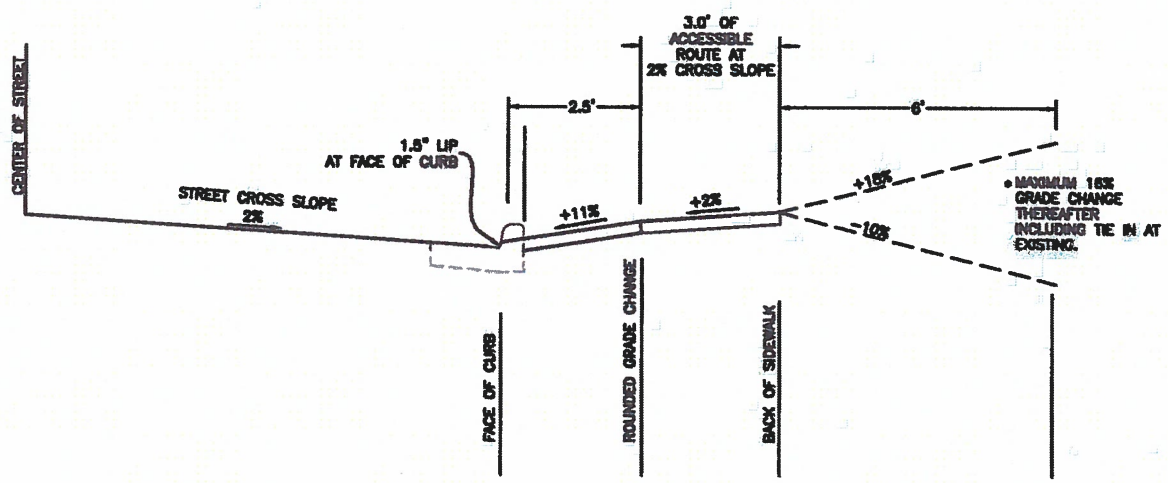

NOTE: 1. ALL GRADE CHANGES SHALL BE ROUNDED OFF WITH A 2' RADIUS.
2. THE MAXIMUM GRADE CHANGE SHALL NOT EXCEED 16%.
3. GRADES SHOWN ARE THE MAXIMUM ALLOWED TO AVOID DRAGGING A VEHICLE. THE GRADES SHALL NOT BE DESIGNED OR USED EXCEPT IN EXTREME CONDITIONS.

PUBLIC WORKS · CITY OF LITTLE ROCK

TITLE
DRIVEWAY
MAXIMUM GRADES
DETAIL C

Issue Date: AUG, 2006

PW-38
Revision Date: APR 2015

MAXIMUM GRADES FOR DRIVEWAY WHEN GROUND FALLS AWAY FROM STREET WITH NO SIDEWALK

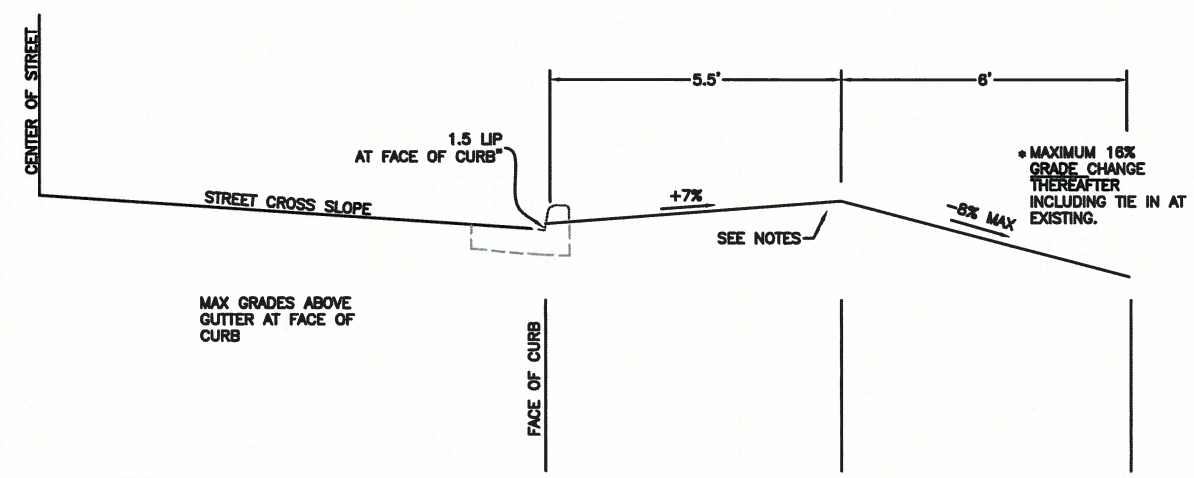

NOTE (1) DRIVEWAY AT 5.5' FROM FACE OF CURB SHALL BE LEVEL WITH TOP OF CURB TO KEEP WATER IN STREET. ANY VARIATION REQUIRES APPROVAL FROM ENGINEER.
(2) ALL GRADE CHANGES SHALL BE ROUNDED OFF WITH A 2' RADIUS.
(3). THE MAXIMUM GRADE CHANGE SHALL NOT EXCEED 16%.
(4). GRADES SHOWN ARE THE MAXIMUM ALLOWED TO AVOID DRAGGING A VEHICLE. THE GRADES SHALL NOT BE DESIGNED OR USED EXCEPT IN EXTREME CONDITIONS.

STATE OF ARKANSAS ★★★ LICENSED PROFESSIONAL ENGINEER ★★★ No. 13365 Leon Dale Burke
6/13/17
BRIDGE ENGINEER

MEHLBURGER BRAWLEY
10 N. SHACKLEFORD PLAZA, SUITE 104
LITTLE ROCK, ARKANSAS 72211
(501) 375-5331 - FAX (501) 398-6481
CA # 2532 EXPIRES 12/31/17

GEYER SPRINGS OVERPASS
ROUTE SEC.
CITY OF LITTLE ROCK
LITTLE ROCK, ARK

DRAWN BY: CDP DATE: 10/22/15 FILENAME: SPECIAL DETAILS
CHECKED BY: DB DATE: 10/22/15 SCALE: NTS
DESIGNED BY: MB DATE: 10/22/15
BRIDGE NO. — DRAWING NO.

DATE REVISED	DATE FILMED	DATE REVISED	DATE FILMED	FED. RD. DIST. NO.	STATE	FED. AID PROJ. NO.	SHEET NO.	TOTAL SHEETS
10/22/15		1/16/17		6	AR			
2/19/16		6/13/17		JOB No.		060907	16	67
5/19/16								

(2) SPECIAL DETAILS

TITLE	Issue Date	PW-39 Revision Date
DRIVEWAY MAXIMUM GRADES DETAIL D	AUG, 2006	APR 2015

MAXIMUM GRADES FOR DRIVEWAY WHEN GROUND RISES FROM STREET WITH NO SIDEWALK

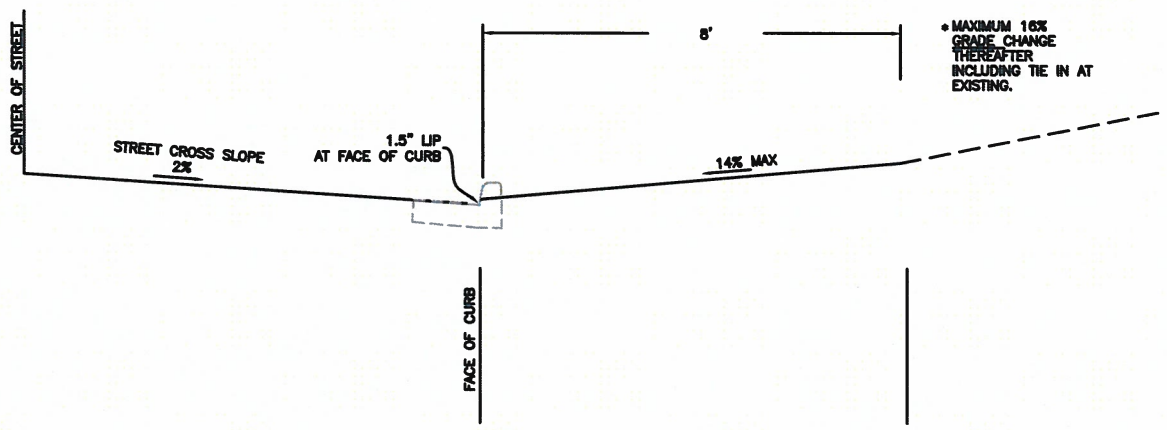

NOTE: 1. ALL GRADE CHANGES SHALL BE ROUNDED OFF WITH A 2' RADIUS.
2. THE MAXIMUM GRADE CHANGE SHALL NOT EXCEED 16%.
3. GRADES SHOWN ARE THE MAXIMUM ALLOWED TO AVOID DRAGGING A VEHICLE. THE GRADES SHALL NOT BE DESIGNED OR USED EXCEPT IN EXTREME CONDITIONS.

TITLE	Issue Date	PW-40 Revision Date
DRIVEWAY MAXIMUM GRADES DETAIL E	AUG, 2006	MAR 2016

MAXIMUM GRADES FOR DRIVEWAY WHEN GROUND FALLS AWAY FROM STREET WITH ABUTTING 5' SIDEWALK 5' OFF BACK OF CURB

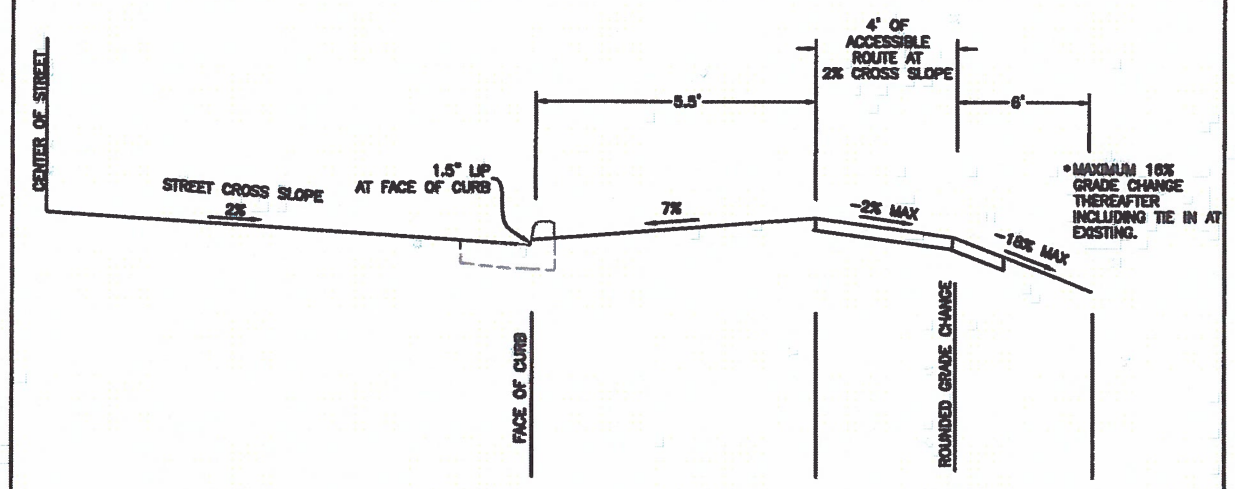

NOTE (1) DRIVEWAY AT 5.5' FROM FACE OF CURB SHALL BE LEVEL WITH TOP OF CURB TO KEEP WATER IN STREET. ANY VARIATION REQUIRES APPROVAL FROM ENGINEER.
(2) ALL GRADE CHANGES SHALL BE ROUNDED OFF WITH A 2' RADIUS.
(3). THE MAXIMUM GRADE CHANGE SHALL NOT EXCEED 16%.
(4). GRADES SHOWN ARE THE MAXIMUM ALLOWED TO AVOID DRAGGING A VEHICLE. THE GRADES SHALL NOT BE DESIGNED OR USED EXCEPT IN EXTREME CONDITIONS.

STATE OF ARKANSAS
LICENSED PROFESSIONAL ENGINEER
No. 13303
Leon Dale Burke
8/13/17
BRIDGE ENGINEER

MEHLBURGER BRAWLEY
10 N. SHACKLEFORD PLAZA, SUITE 104
LITTLE ROCK, ARKANSAS 72211
(501) 375-5331 - FAX (501) 398-6481
CA # 2532 EXPIRES 12/31/17

GEYER SPRINGS OVERPASS
ROUTE SEC.
CITY OF LITTLE ROCK
LITTLE ROCK, ARK

DRAWN BY: CDP DATE: 10/22/15
CHECKED BY: DB DATE: 10/22/15
DESIGNED BY: MB DATE: 10/22/15
FILENAME: SPECIAL DETAILS
SCALE: NTS
BRIDGE NO. — DRAWING NO.

DATE REVISED	DATE FILMED	DATE REVISED	DATE FILMED	FED. RD. DIST. NO.	STATE	FED. AID PROJ. NO.	SHEET NO.	TOTAL SHEETS
10/22/15		1/16/17		6	AR			
2/19/16		6/13/17		JOB No.		060907	17	67
5/19/16								

(2) SPECIAL DETAILS

TITLE	Issue Date	PW-41 Revision Date
SIDEWALK DETAILS	AUG, 2006	APR 2015

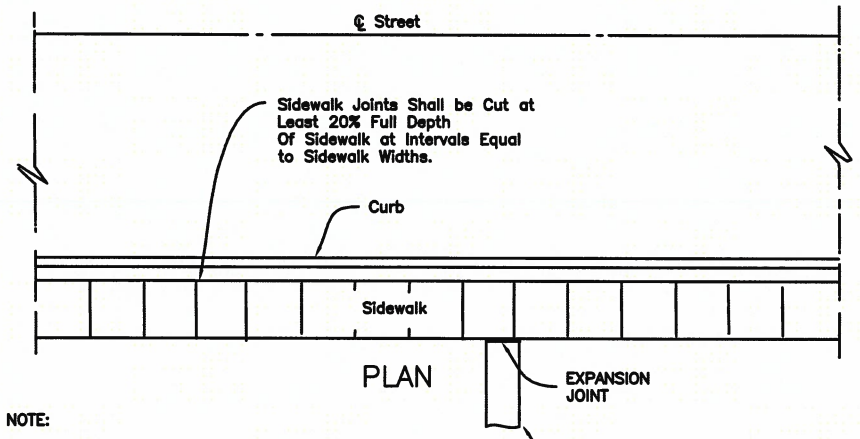

PLAN

NOTE:

(1).1/2" Expansion Joint Spacing at 60' Or adjacent to Structures and Drives.
(2).Sidewalk Expansion Material is Required Between Sidewalk and Curb.
(3).Dowel bars with Expansion Joint Material required at inlets. See PW-42.

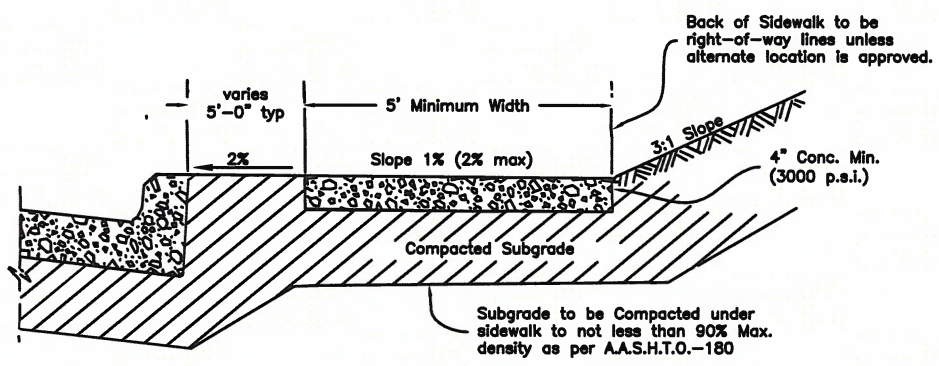

SECTION

Expansion joint shall be installed between public and private sidewalk, buildings or driveways.

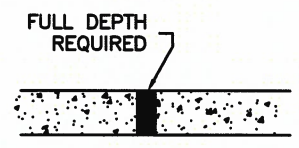

EXPANSION DETAIL

TITLE	Issue Date	PW-48 Revision Date
ACCESS RAMP (GENERAL NOTES & RAMP CRITERIA)	AUG, 2006	APR 2015

(A) THE SLOPE OF THE RAMP SHALL NOT EXCEED 1:12 (8.33%). CONTRACTORS SHOULD FORM RAMPS AT A GRADE LOWER THAN 8.33% TO ALLOW ROOM FOR CONSTRUCTION TOLERANCES. POURING AND FINISHING RAMPS WITHOUT THE AID OF A DIGITAL LEVEL IN CHECKING GRADES IS DISCOURAGED, BECAUSE CONTRACTORS WILL BE REQUIRED TO REMOVE ANY RAMP WITH GRADES EXCEEDING REQUIREMENTS SHOWN IN STANDARD DETAILS. RAMP SURFACE SHALL BE COURSE BROOMED TRANSVERSE TO THE SLOPE. GROOVES/JOINTS ARE NOT TO BE INSTALLED IN THE RAMP SURFACE.

(B) THE MINIMUM THICKNESS OF RAMPS, SIDEWALKS AND LANDING AREAS SHALL BE 4 INCHES. CONCRETE TO BE MINIMUM 3000 p.s.i.. EXPOSED AGGREGATE CONCRETE SHALL NOT BE USED ON SURFACE RAMPS. WIRE REINFORCEMENT IS NOT REQUIRED IN RAMPS OR SIDEWALKS UNLESS SPECIFICALLY STATED IN DESIGN PLANS.

(C) THE MAXIMUM RAMP AND LANDING CROSS-SLOPE SHALL BE 2.0% UNLESS THE STREET GRADE EXCEEDS 2.0%, THEN THE CROSS-SLOPE OF THE RAMP SHALL MATCH THE STREET RUNNING GRADE. DO NOT PROVIDE TRANSITIONAL WARPS IN THE GUTTER, RAMP SURFACE OR LANDING AREA. THE STREET RUNNING GRADE IS MEASURED DIRECTLY IN FRONT OF THE RAMP WITH A 4 FOOT DIGITAL LEVEL AND IS THE GRADE OF THE STREET PERPENDICULAR TO THE RAMP RUNNING SLOPE WHERE THE ASPHALT ABUTS THE GUTTER.

(D) GUTTER SHALL NOT EXCEED 5.0% DIRECTLY IN FRONT OF A CURB RAMP. NO LIP OR VERTICLE SEPARATION SHALL BE INSTALLED BETWEEN THE GUTTER AND THE RAMP.

(E) THE MINIMUM RAMP WIDTH SHALL BE 4 FEET. A THREE FOOT WIDE RAMP IS ACCEPTABLE ONLY IN THE CASE OF AN OBSTRUCTION AND WITH PUBLIC WORKS WRITTEN APPROVAL. CURB RAMPS, SIDEWALKS, MEDIAN CUTS AND CROSSWALKS SHALL BE ALIGNED UNLESS NOT POSSIBLE TO AID IMPAIRED USERS.

(F) RAMP SIDE FLARES SHALL NOT EXCEED 10.0% RELATIVE TO THE STREET. (EXAMPLE: IF THE STREET SLOPE IS 5.0% THEN THE SIDE FLARE SLOPE MAY BE UP TO 15.0% ON THE LOW SIDE TO ALLOW THE THE FLARE TO MATCH CURB HEIGHT IN A REASONABLE DISTANCE. THE SIDE FLARE SLOPE ON THE HIGH SIDE OF THE RAMP WOULD REMAIN AT 10.0% OR LESS GRADE SINCE IT WILL MATCH CURB HEIGHT QUICKLY).

(G) A MINIMUM 3 FOOT LONG SIDEWALK TRANSITION SHALL BE PROVIDED WHEN MATCHING CURB RAMP/LEVEL LANDING TO EXISTING SIDEWALKS WITH CROSS SLOPE EXCEEDING 2.0%. ADDITIONAL TRANSITION LENGTH MAY BE REQUIRED WHEN MATCHING TO EXISTING SIDEWALK WITH SEVERE CROSS SLOPE.

(H) MEDIAN CUTS: SHALL BE 6 FEET WIDE FOR TWO-WAY PEDESTRIAN TRAFFIC ALIGNED WITH CROSSING. MEDIAN CUT CROSS SLOPE SHALL BE MAXIMUM 2.0% OR MATCH STREET GRADE WHEN ROADWAY SLOPE EXCEEDS 2.0%.

(I) RAMP LENGTH IS LIMITED TO 15 FEET.

GENERAL NOTES FOR DETECTABLE WARNING DEVICES

THE DETECTABLE WARNING DEVICE SHALL BE LOCATED SO THAT THE NEAREST EDGE OF THE DEVICE IS 6 TO 8 INCHES FROM THE FACE OF CURB.

TRUNCATED DOMES IN THE DETECTABLE WARNING SURFACE SHALL MEET THE REQUIREMENTS OF THE GEOMETRIC CONFIGURATION SHOWN.

DOMES SHALL BE ALIGNED ON A SQUARE GRID IN THE PREDOMINENT DIRECTION OF TRAVEL TO PERMIT THE WHEELS TO ROLL BETWEEN DOMES.

DETECTABLE WARNING DEVICE SHALL BE 24 INCHES IN THE DIRECTION OF TRAVEL AND EXTEND THE FULL WIDTH OF THE CURB RAMP OR FLUSH SURFACE.

DETECTABLE WARNING DEVICE SHALL BE ON THE AHTD QUALIFIED PRODUCTS LIST FOR CAST-IN-PLACE TACTILE PANELS (ADA DETECTABLE WARNING).

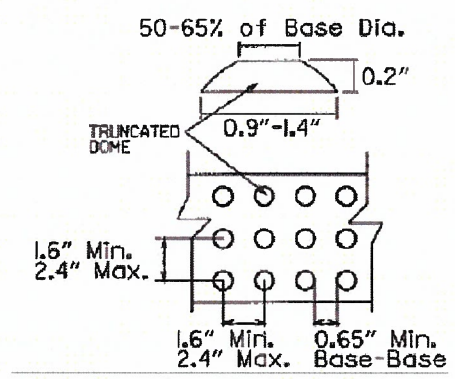

FIRST CHOICE	TYPE 1	CORNER LOCATIONS WITH WALK ADJACENT TO CURB BOTH NEW CONSTRUCTION AND ALTERATIONS
	TYPE 2	CORNER LOCATIONS WITH WALK OFFSET FROM CURB A DISTANCE INSUFFICIENT TO ALLOW REQUIRED RAMP SLOPE (BOTH NEW CONSTRUCTION AND ALTERATIONS)
	TYPE 3	CORNER LOCATIONS WITH WALK OFFSET FROM CURB A DISTANCE SUFFICIENT TO ALLOW REQUIRED RAMP SLOPE (BOTH NEW CONSTRUCTION AND ALTERATIONS)
	TYPE 4	TANGENT LOCATIONS (BOTH NEW CONSTRUCTION AND ALTERATIONS)
SECOND	TYPE 5	TANGENT LOCATIONS (ALTERATIONS ONLY)

STATE OF ARKANSAS LICENSED PROFESSIONAL ENGINEER No. 13365 Lonnie Dale Bunch Jr. 6/13/17

GEYER SPRINGS OVERPASS
ROUTE SEC.
CITY OF LITTLE ROCK
LITTLE ROCK, ARK

DRAWN BY: CDP DATE: 10/22/15
CHECKED BY: DB DATE: 10/22/15
DESIGNED BY: MB DATE: 10/22/15
FILENAME: SPECIAL DETAILS
SCALE: NTS
BRIDGE NO. — DRAWING NO.

MEHLBURGER BRAWLEY
10 N. SHACKLEFORD PLAZA, SUITE 104
LITTLE ROCK, ARKANSAS 72211
(501) 375-5331 - FAX (501) 398-6481
CA # 2532 EXPIRES 12/31/17

DATE REVISED	DATE FILMED	DATE REVISED	DATE FILMED	FED. RD. DIST. NO.	STATE	FED. AID PROJ. NO.	SHEET NO.	TOTAL SHEETS
10/22/15		1/16/17		6	AR			
2/19/16		6/13/17		JOB No.		060907	18	67
5/19/16								

(2) SPECIAL DETAILS

TITLE	Issue Date	PW-51 Revision Date
ACCESS RAMP TYPE 3 EXPANSION JOINT ALTERNATE 1	AUG, 2006	APR 2015

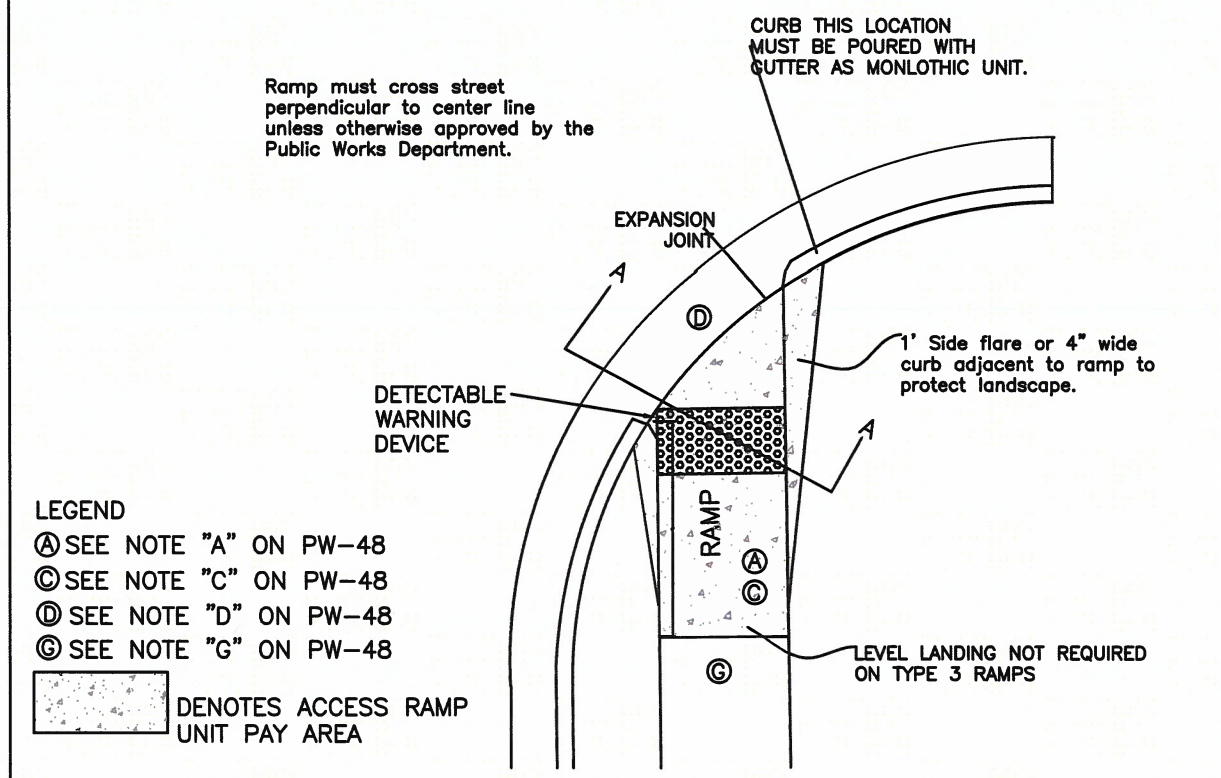

LEGEND
Ⓐ SEE NOTE "A" ON PW-48
Ⓒ SEE NOTE "C" ON PW-48
Ⓓ SEE NOTE "D" ON PW-48
Ⓖ SEE NOTE "G" ON PW-48
DENOTES ACCESS RAMP UNIT PAY AREA

TYPE 3 RAMP PLAN

EXPANSION JOINT ALTERNATE 1

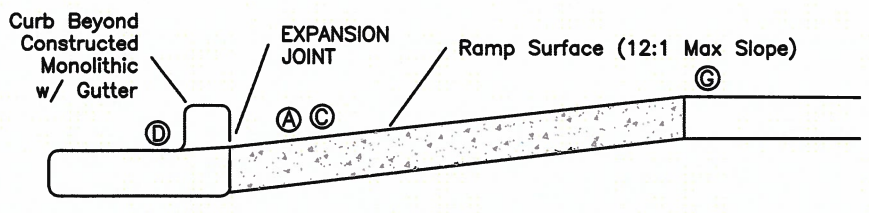

SECTION A–A

TITLE	Issue Date	PW-52 Revision Date
ACCESS RAMP TYPE 3 EXPANSION JOINT ALTERNATE 2	AUG, 2006	APR 2015

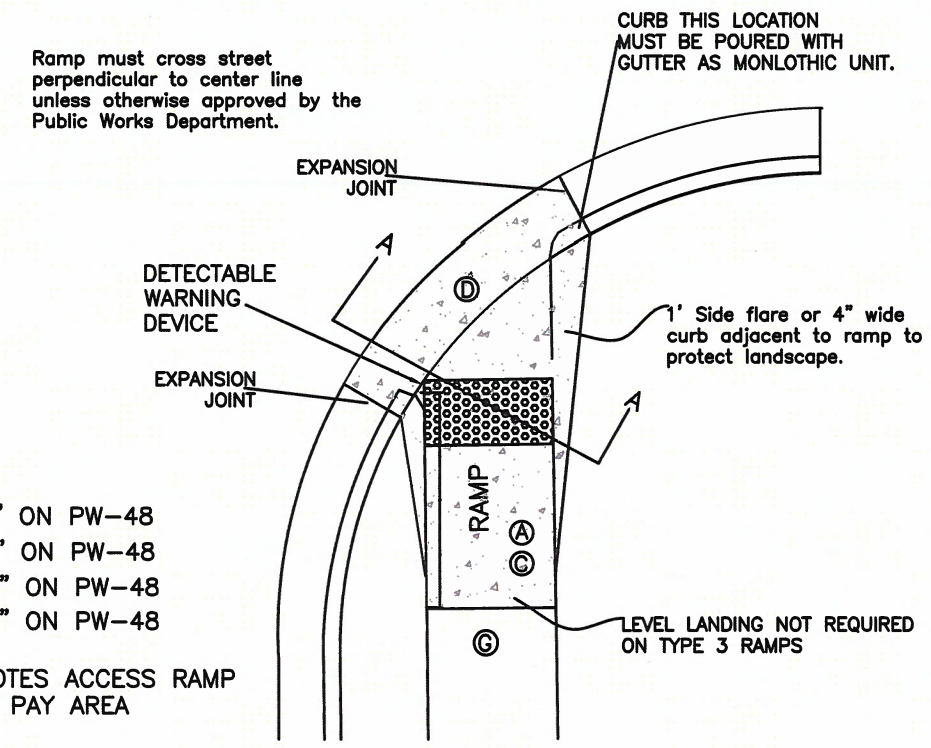

LEGEND
Ⓐ SEE NOTE "A" ON PW-48
Ⓒ SEE NOTE "C" ON PW-48
Ⓓ SEE NOTE "D" ON PW-48
Ⓖ SEE NOTE "G" ON PW-48
DENOTES ACCESS RAMP UNIT PAY AREA

TYPE 3 RAMP PLAN

EXPANSION JOINT ALTERNATE 2

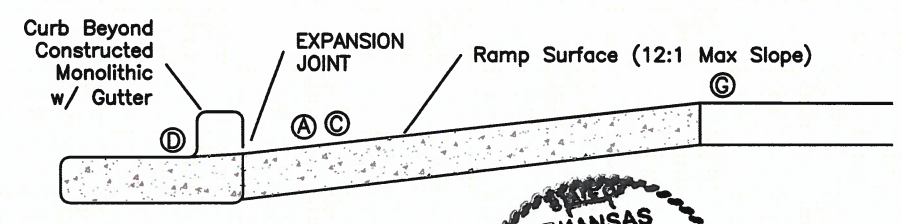

SECTION A–A

STATE OF ARKANSAS ★★★ LICENSED PROFESSIONAL ENGINEER ★★★ No. 13363 Troy Dale Burton, Jr. 1/4/17 BRIDGE ENGINEER

MEHLBURGER BRAWLEY
10 N. SHACKLEFORD PLAZA, SUITE 104
LITTLE ROCK, ARKANSAS 72211
(501) 375-5331 - FAX (501) 398-6481
CA # 2532 EXPIRES 12/31/17

GEYER SPRINGS OVERPASS
ROUTE SEC.
CITY OF LITTLE ROCK
LITTLE ROCK, ARK

DRAWN BY: CDP	DATE: 10/22/15	FILENAME: SPECIAL DETAILS	
CHECKED BY: DB	DATE: 10/22/15	SCALE: NTS	
DESIGNED BY: MB	DATE: 10/22/15		

BRIDGE NO. – DRAWING NO.

DATE REVISED	DATE FILMED	DATE REVISED	DATE FILMED	FED. RD. DIST. NO.	STATE	FED. AID PROJ. NO.	SHEET NO.	TOTAL SHEETS
10/22/15		1/16/17		6	AR			
2/19/16		6/13/17		JOB No.		060907	19	67
5/19/16								

(2) SPECIAL DETAILS

TITLE

END SECTION
RIP RAP PLACEMENT

Issue Date AUG, 2006

PW-62
Revision Date APR 2015

Pipe Outlet to Flat Area-
No Well-defined Channel

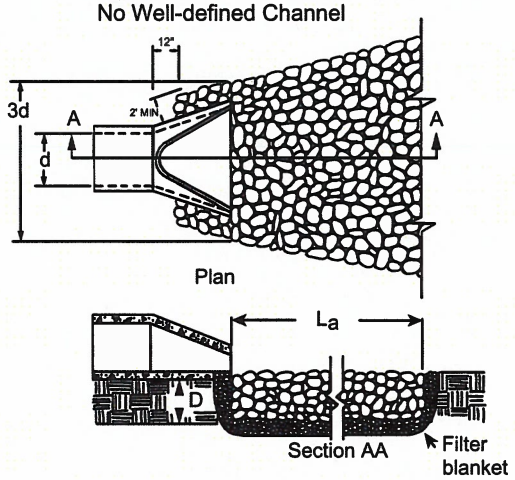

Pipe Outlet to Well-defined
Channel

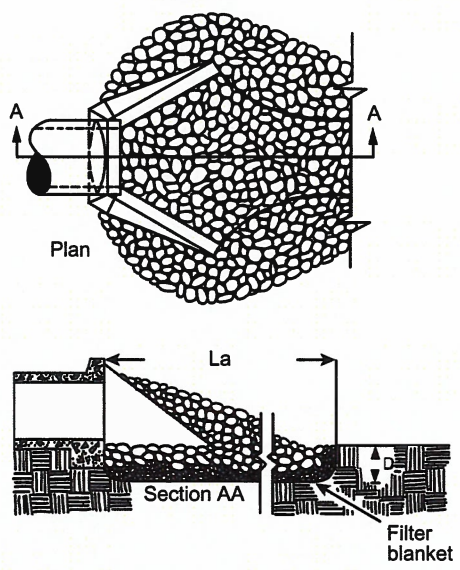

Notes

1. L_a is the length of the riprap apron. Please see design plans for length.
2. D = 1.5 times the maximum stone diameter but not less than 6".
3. In a well-defined channel extend the apron up the channel banks to an elevation of 6" above the maximum tailwater depth of to the top of the bank, whichever is less.
4. A filter blanket or filter fabric should be installed between the riprap and soil foundation complying with AASHTO M288.
5. Please see detail PW-60 for grouting.

TITLE

SILT FENCE

Issue Date AUG, 2006

PW-63
Revision Date APR 2015

NOTES:

1. GEOTEXTILE FABRIC (TYPE 4) IN ACCORDANCE WITH SECTION 625 (AHTD SPECS).
2. TYPE A – USE ON SMALL DEVELOPMENTS WHERE THE LIFE OF THE PROJECT IS LESS THAN SIX MONTHS AND THE SLOPE GRADIENT IS LESS THAN 3:1.
3. TYPE B – USE ON DEVELOPMENTS WHERE THE LIFE OF THE PROJECT IS GREATER THAN SIX MONTHS AND WHERE THE SLOPE GRADIENT IS 3:1 OR GREATER.
4. TYPE C – USE WHERE SLOPES EXCEED A VERTICAL HEIGHT OF 20 FEET AND THE SLOPE GRADIENT IS STEEPER THEN 3:1.
5. INSPECT BARRIERS AT THE END OF EACH WORKING DAY, OR AFTER EACH RAIN, AND REPAIR OR CLEAN AS NECESSARY.
6. REMOVE SEDIMENT FROM BARRIER WHEN ONE HALF FULL.
7. DISPOSE OF SEDIMENT AND STABILIZE IT WITH VEGETATION.
8. REPLACE FILTER FABRIC WHEN DETERIORATED.
9. DESIGN LIFE OF A SYNTHETIC SILT FENCE IS APPROXIMATELY 6 MONTHS.
10. MAINTAIN UNTIL THE PROJECT IS VEGETATED OR OTHERWISE STABILIZED.
11. REMOVE BARRIERS AND ACCUMULATED SEDIMENT AND STABILIZE THE EXPOSED AREA WHEN THE PROJECT IS STABILIZED.
12. SILT FENCE SHALL BE INSTALLED ALONG THE CONTOUR, NEVER UP OR DOWN A SLOPE.
13. THE MAXIMUM DRAINAGE AREA FOR A CONTINUOUS FENCE WITHOUT BACKING SHALL BE 1/4 ACRE PER 100 LINEAR FEET OF FENCE LENGTH, UP TO A MAXIMUM AREA OF 2 ACRES. THE MAXIMUM SLOPE LENGTH BEHIND THE FENCE ON THE UPSLOPE SIDE SHOULD BE 110 FEET (AS MEASURED ALONG THE GROUND SURFACE).
14. THE MAXIMUM DRAINAGE AREA FOR A CONTINUOUS SILT FENCE WITH BACKING SHALL BE 1 ACRE PER 150 LINEAR FEET OF FENCE LENGTH. THE SLOPE LENGTH ABOVE THE SILT FENCE WITH BACKING SHOULD BE NO MORE THAN 300 FEET.

STATE OF ARKANSAS
LICENSED PROFESSIONAL ENGINEER
No. 15365
Leon Daig Burke, JR.
6/13/17
BRIDGE ENGINEER

GEYER SPRINGS OVERPASS
ROUTE SEC.
CITY OF LITTLE ROCK
LITTLE ROCK, ARK

DRAWN BY: CDP DATE: 10/22/15
CHECKED BY: DB DATE: 10/22/15
DESIGNED BY: MB DATE: 10/22/15
FILENAME: SPECIAL DETAILS
SCALE: NTS
BRIDGE NO. – DRAWING NO.

MEHLBURGER BRAWLEY
10 N. SHACKLEFORD PLAZA, SUITE 104
LITTLE ROCK, ARKANSAS 72211
(501) 375-5331 - FAX (501) 398-6481
CA # 2532 EXPIRES 12/31/17

DATE REVISED	DATE FILMED	DATE REVISED	DATE FILMED	FED. RD. DIST. NO.	STATE	FED. AID PROJ. NO.	SHEET NO.	TOTAL SHEETS
10/22/15		1/16/17		6	AR			
2/19/16		6/13/17		JOB No.		060907	20	67
5/19/16								

(2) SPECIAL DETAILS

TITLE	Issue Date	PW-63 Revision Date
SILT FENCE	AUG, 2006	APR 2015

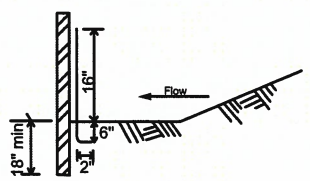

SIDE VIEW

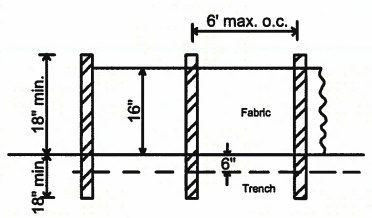

FRONT VIEW

NOTE:
Use wood or steel posts

SF-A SILT FENCE (TYPE A)
NTS

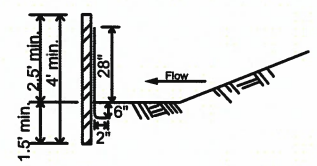

SIDE VIEW

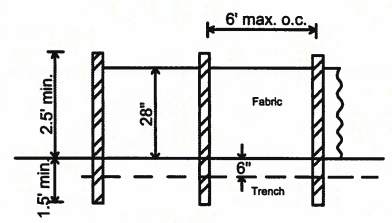

FRONT VIEW

NOTE:
Use wood or steel posts

SF-B SILT FENCE (TYPE B)
NTS

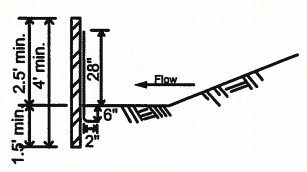

SIDE VIEW

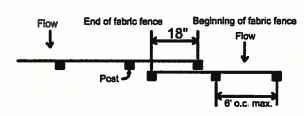

TOP VIEW - (Not to scale)

OVERLAP AT FABRIC ENDS

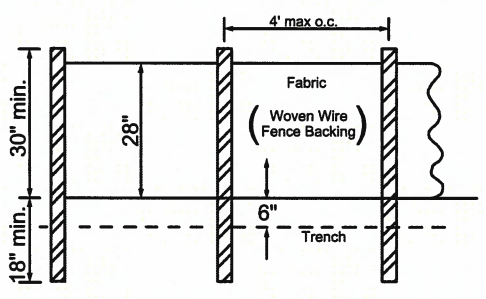

FRONT VIEW

NOTE:
Use steel posts.- only

SF-C SILT FENCE (TYPE C)
NTS

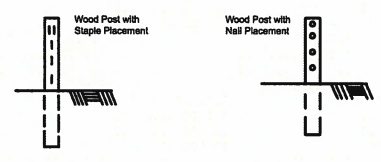

FRONT VIEWS

FASTENERS FOR SILT FENCES

TITLE	Issue Date	PW-64 Revision Date
CONSTRUCTION EXIT	AUG, 2006	APR 2015

1. LOCATE STONE STABILIZED PAD AT ANY POINT WHERE VEHICULAR TRAFFIC WILL BE LEAVING THE CONSTRUCTION SITE ONTO A PUBLIC RIGHT-OF-WAY, STREET, ALLEY, SIDEWALK, OR PARKING AREA OR ANY OTHER AREA WHERE THERE IS A TRANSITION FROM BARE SOIL TO A PAVED AREA.
2. WIDTH – 20'-0 MINIMUM BUT NOT LESS THAN FULL WIDTH OF ALL POINTS OF VEHICULAR EGRESS. LENGTH – 50'-0 MINUMUM
3. MAINTAIN THE EXIT TO PREVENT TRACKING OR FLOW OF MUD ONTO PUBLIC RIGHTS- OF-WAY. PROVIDE PERIODIC TOP DRESSING WITH 1.5 – 3.5" STONE, AS CONDITIONS DEMAND. IMMEDIATELY REMOVE ALL MATERIALS SPILLED, DROPPED, WASHED, OR TRACKED FROM VEHICLE OR SITE ONTO ROADWAY OR INTO STORM DRAINS. CLEAN WHEELS TO REMOVE MUD PRIOR TO ENTRANCE ON TO PUBLIC RIGHTS-OF-WAY.
4. WHEN WASHING IS REQUIRED, DO SO ON AREAS STABILIZED WITH CRUSHED STONE DRAINING INTO AN APPROVED SEDIMENT TRAP OR SEDIMENT BASIN.

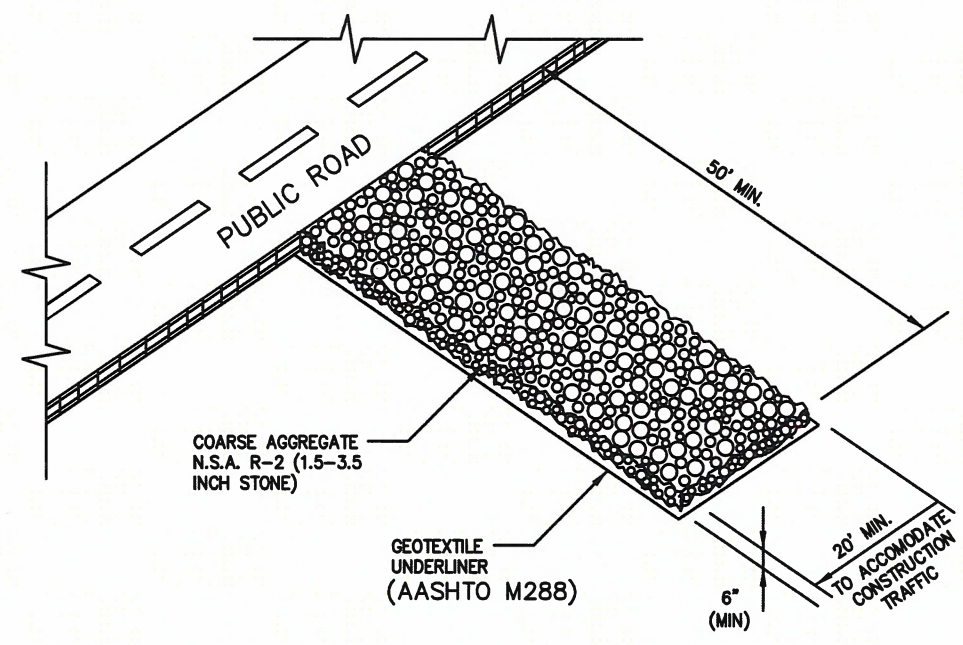

CO CONSTRUCTION EXIT
NTS

STATE OF ARKANSAS
LICENSED PROFESSIONAL ENGINEER
No. 13363
Donald Burton, Jr.
BRIDGE ENGINEER
6/13/17

GEYER SPRINGS OVERPASS
ROUTE SEC.
CITY OF LITTLE ROCK
LITTLE ROCK, ARK

DRAWN BY: CDP DATE: 10/22/15
CHECKED BY: DB DATE: 10/22/15
DESIGNED BY: MB DATE: 10/22/15
FILENAME: SPECIAL DETAILS
SCALE: NTS
BRIDGE NO. –
DRAWING NO.

MEHLBURGER BRAWLEY
10 N. SHACKLEFORD PLAZA, SUITE 104
LITTLE ROCK, ARKANSAS 72211
(501) 375-5331 - FAX (501) 398-6481
CA # 2532 EXPIRES 12/31/17

DATE REVISED	DATE FILMED	DATE REVISED	DATE FILMED	FED. RD. DIST. NO.	STATE	FED. AID PROJ. NO.	SHEET NO.	TOTAL SHEETS
10/22/15		1/16/17		6	AR			
2/19/16		6/13/17		JOB No.		060907	21	67
5/19/16								

(2) SPECIAL DETAILS

TITLE		
TEMPORARY STABILIZATION TEMPORARY GRASSING PERMANENT GRASSING	Issue Date AUG, 2006	PW-66 Revision Date APR 2015

Ts1 TEMPORARY STABILIZATION

SPECIES	RATE / 1000 SF.	PLANTING DATES
STRAW MULCH	92 LB.	ANY TIME FOR TEMPORARY COVER.

Ts2 TEMPORARY GRASSING

SPECIES	RATE / ACRE	PLANTING DATES	FERTILIZER	RATE / ACRE	MULCH RATE
MILLET	50 LB	JAN 21 TO AUG 14	10-20-10	500 LB	REFER TO TS-1
RYE	100 LB	AUG 15 TO JAN 20	10-20-10	500 LB	

Ts3 PERMANENT GRASSING

SPECIES	RATE / ACRE	PLANTING DATES	FERTILIZER	RATE / ACRE	MULCH RATE
BERMUDA GRASS (UNHULLED) BERMUDA GRASS (HULLLED) LESPEDEZA (KOBE)	5 LB. 10 LB. 10 LB.	MARCH 1 TO JUNE 15	10-20-10	800 LB.	REFER TO TS-1
BERMUDA GRASS (UNHULLED) BERMUDA GRASS (HULLLED)	5 LB. 10 LB.	JUNE 16 TO AUGUST 31	10-20-10	800 LB.	
BERMUDA GRASS (UNHULLED) WHEAT	20 LB. 15 LB.	SEPTEMBER 1 TO FEBRUARY 29	10-20-10	800 LB.	

TITLE		
CHECK DAM	Issue Date AUG, 2006	PW-68 Revision Date APR 2015

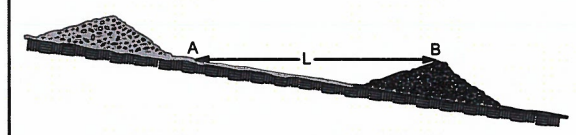

SPACING BETWEEN CHECK DAMS

STONE CHECK DAM

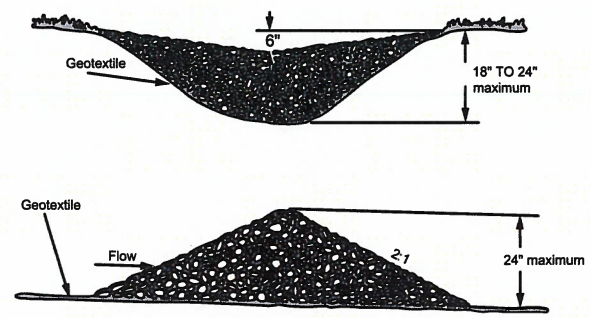

NOTES:
1. PLACE IN SMALL, OPEN CHANNELS, NOT IN LIVE STREAMS.
2. CONSTRUCT CENTER AT LEAST 6 INCHES LOWER THAN OUTER EDGES.
3. EXTEND ACROSS ENTIRE WIDTH OF DITCH OR SWALE.
4. MAKE SIDE SLOPES 2:1 OR FLATTER.
5. DRAINAGE AREA NOT TO EXCEED 2 ACRES.
6. CONSTRUCTED OF GRADED SIZE 2 IN-10 IN STONE.
7. PERIODIC INSPECTION AND MAINTENANCE REQUIRED.
8. REMOVE SEDIMENT WHEN IT REACHES A DEPTH OF ONE-HALF THE ORIGINAL DAM HEIGHT.
9. SAND BAGS MAY BE USED AS AN ALERNATE. GEOTEXTILE MAY BE OMITTED WHEN USING SAND BAGS

CD CHECK DAM
NTS

STATE OF ARKANSAS
LICENSED PROFESSIONAL ENGINEER
No. 13205
Leon Dale Burke, Jr.
6/13/17
BRIDGE ENGINEER

GEYER SPRINGS OVERPASS
ROUTE SEC.
CITY OF LITTLE ROCK
LITTLE ROCK, ARK

DRAWN BY: CDP DATE: 10/22/15
CHECKED BY: DB DATE: 10/22/15
DESIGNED BY: MB DATE: 10/22/15
FILENAME: SPECIAL DETAILS
SCALE: NTS
BRIDGE NO. — DRAWING NO.

MEHLBURGER BRAWLEY
10 N. SHACKLEFORD PLAZA, SUITE 104
LITTLE ROCK, ARKANSAS 72211
(501) 375-5331 - FAX (501) 398-6481
CA # 2532 EXPIRES 12/31/17

DATE REVISED	DATE FILMED	DATE REVISED	DATE FILMED	FED. RD. DIST. NO.	STATE	FED. AID PROJ. NO.	SHEET NO.	TOTAL SHEETS
10/22/15		1/16/17		6	AR			
2/19/16		6/13/17		JOB No.		060907	22	67
5/19/16								

(2) SPECIAL DETAILS

TITLE	Issue Date	Revision Date
INLET PROTECTION	AUG, 2006	APR 2015

PW-71

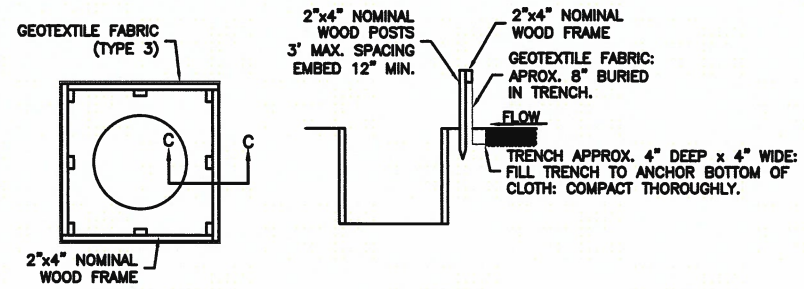

SD-1 SILT FENCE
NTS

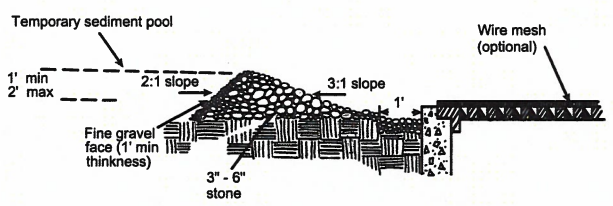

SD-2 GRATE INLET – GRAVEL RING
NTS

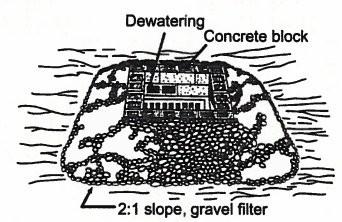

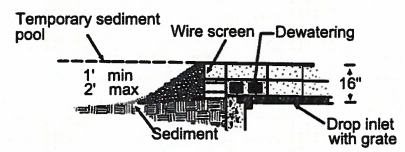

SD-3 GRATE INLET – BLOCK & GRAVEL
NTS

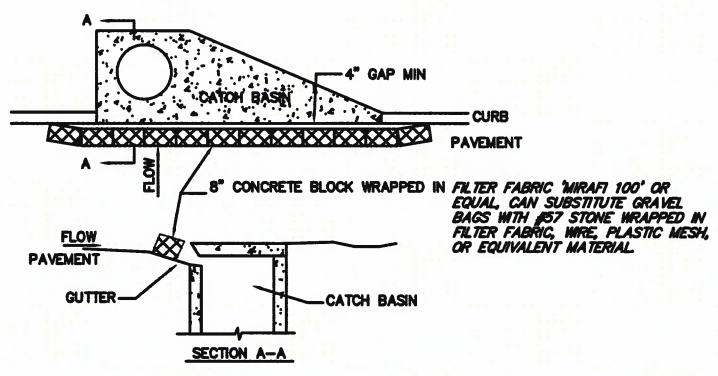

NOTE: INSTALL FILTER AFTER ANY ASPHALT PAVING

SD-4 CURB INLET – BLOCK
NTS

TITLE	Issue Date	Revision Date
SEDIMENT BASIN	AUG, 2006	APR 2015

PW-72

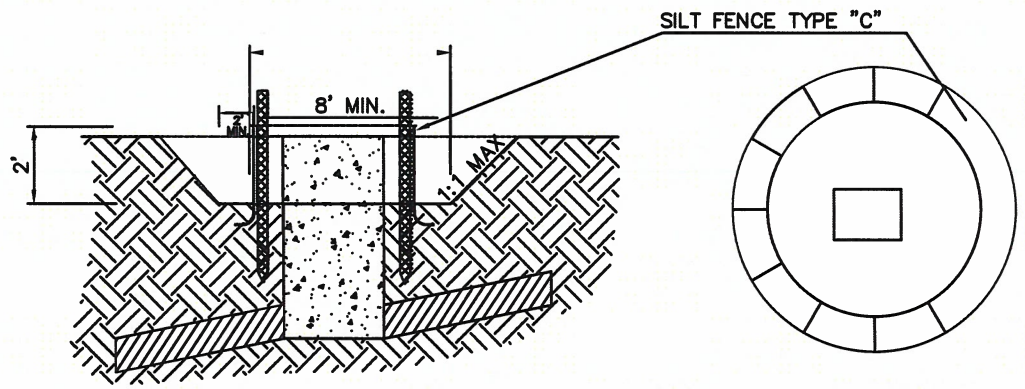

PROTECT INLETS DURING CONSTRUCTION. KEEP SEDIMENT OUT OF STORM DRAINAGE SYSTEM. USE HALF CIRCLE BEHIND CURB INLETS DURING STREET CONSTRUCTION. CIRCULAR SHAPE IS NOT ESSENTIAL – VARY SHAPE TO FIT DRAINAGE AREA AND TERRAIN. OBSERVE TO CHECK TRAP EFFICIENCY AND MODIFY AS NECESSARY TO TRAP SEDIMENT.

CLEAN WHEN SEDIMENT IS 6" BELOW RIM ELEVATION.

SB-2 INLET SEDIMENT TRAP
NTS

NOTES:

THE SEDIMENT STORAGE VOLUME OF THE BASIN, AS MEASURED TO THE ELEVATION OF THE CREST OF THE SPILLWAY, SHALL BE AT LEAST 67 CUBIC YARDS PER ACRE FOR THE DISTURBED AREA DRAINING INTO THE BASIN (67 CUBIC YARDS IS EQUIVALENT TO 1/2 INCH OF SEDIMENT PER ACRE OF DRAINAGE AREA). THE ENTIRE DRAINAGE BASIN AREA SHOULD BE USED FOR THIS COMPUTATION, RATHER THAN THE DISTURBED AREA ALONE, TO HELP ENSURE ADEQUATE TRAPPING EFFICIENCY. SEDIMENT SHALL BE REMOVED FROM THE BASIN WHEN APPROXIMATELY ONE-THIRD OF THE STORAGE VOLUME HAS BEEN LOST TO SEDIMENT ACCUMULATION. THIS VOLUME SHALL BE MARKED ON THE RISER OR BY SETTING A MARKED POST NEAR THE RISER.

STATE OF ARKANSAS
LICENSED PROFESSIONAL ENGINEER
No. 13065
Leon Dale Burke, JR.
6/13/17
BRIDGE ENGINEER

GEYER SPRINGS OVERPASS
ROUTE SEC.
CITY OF LITTLE ROCK
LITTLE ROCK, ARK

DRAWN BY: CDP DATE: 10/22/15 FILENAME: SPECIAL DETAILS
CHECKED BY: DB DATE: 10/22/15 SCALE: NTS
DESIGNED BY: MB DATE: 10/22/15
BRIDGE NO. – DRAWING NO.

MEHLBURGER BRAWLEY
10 N. SHACKLEFORD PLAZA, SUITE 104
LITTLE ROCK, ARKANSAS 72211
(501) 375-5331 - FAX (501) 398-6481
CA # 2532 EXPIRES 12/31/17

DATE REVISED	DATE FILMED	DATE REVISED	DATE FILMED	FED. RD. DIST. NO.	STATE	FED. AID PROJ. NO.	SHEET NO.	TOTAL SHEETS
10/22/15		1/16/17		6	AR			
2/19/16		6/13/17		JOB No.		060907	23	67
5/19/16								

(2) SPECIAL DETAILS

PUBLIC WORKS · CITY OF LITTLE ROCK

TITLE

FRAME BARRICADE TYPE 3
PERMANENT INSTALLATION

Issue Date	PW-74 Revision Date
AUG, 2006	APR 2015

NOTE:

FASTEN TREATED LUMBER WITH $\frac{3}{4}$"x6" LAG SCREWS, WITH WASHERS 2 EACH SIDES

BARRICADE SHALL CONFORM TO THE MANUAL ON UNIFORM TRAFFIC CONTROL DEVICES. SECTION 3F.01

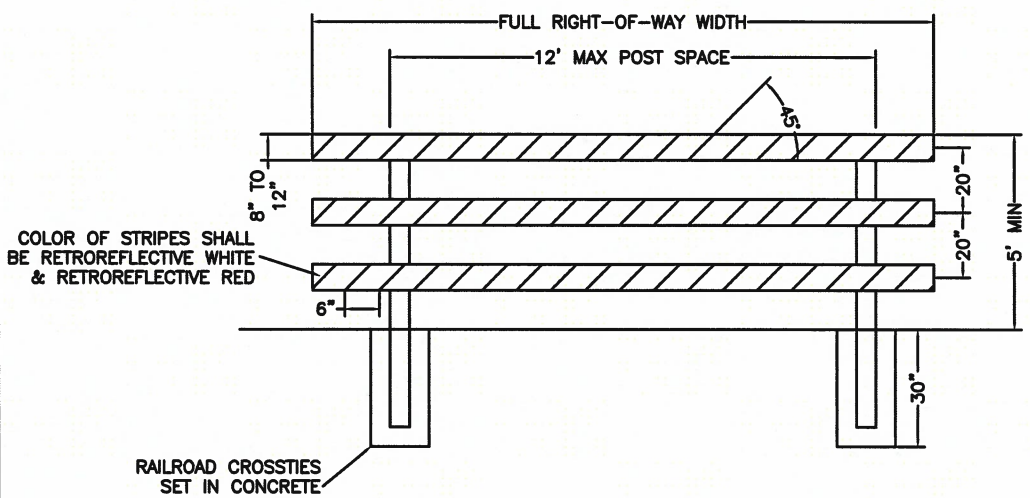

MEHLBURGER BRAWLEY
10 N. SHACKLEFORD PLAZA, SUITE 104
LITTLE ROCK, ARKANSAS 72211
(501) 375-5331 - FAX (501) 398-6481
CA # 2532 EXPIRES 12/31/17

STATE OF ARKANSAS
LICENSED PROFESSIONAL ENGINEER
No. 13365
Leon Dale Burke, Jr.
6/13/17
BRIDGE ENGINEER

GEYER SPRINGS OVERPASS
ROUTE SEC.
CITY OF LITTLE ROCK
LITTLE ROCK, ARK

DRAWN BY: CDP	DATE: 10/22/15	FILENAME: SPECIAL DETAILS	
CHECKED BY: DB	DATE: 10/22/15	SCALE: NTS	
DESIGNED BY: MB	DATE: 10/22/15		

BRIDGE NO. — DRAWING NO.

DATE REVISED	DATE FILMED	DATE REVISED	DATE FILMED	FED. RD. DIST. NO.	STATE	FED. AID PROJ. NO.	SHEET NO.	TOTAL SHEETS
10/22/15		1/16/17		6	AR			
2/19/16		6/13/17		JOB No.		060907	24	67
5/19/16								

(2) TEMPORARY EROSION CONTROL/DEMOLITION

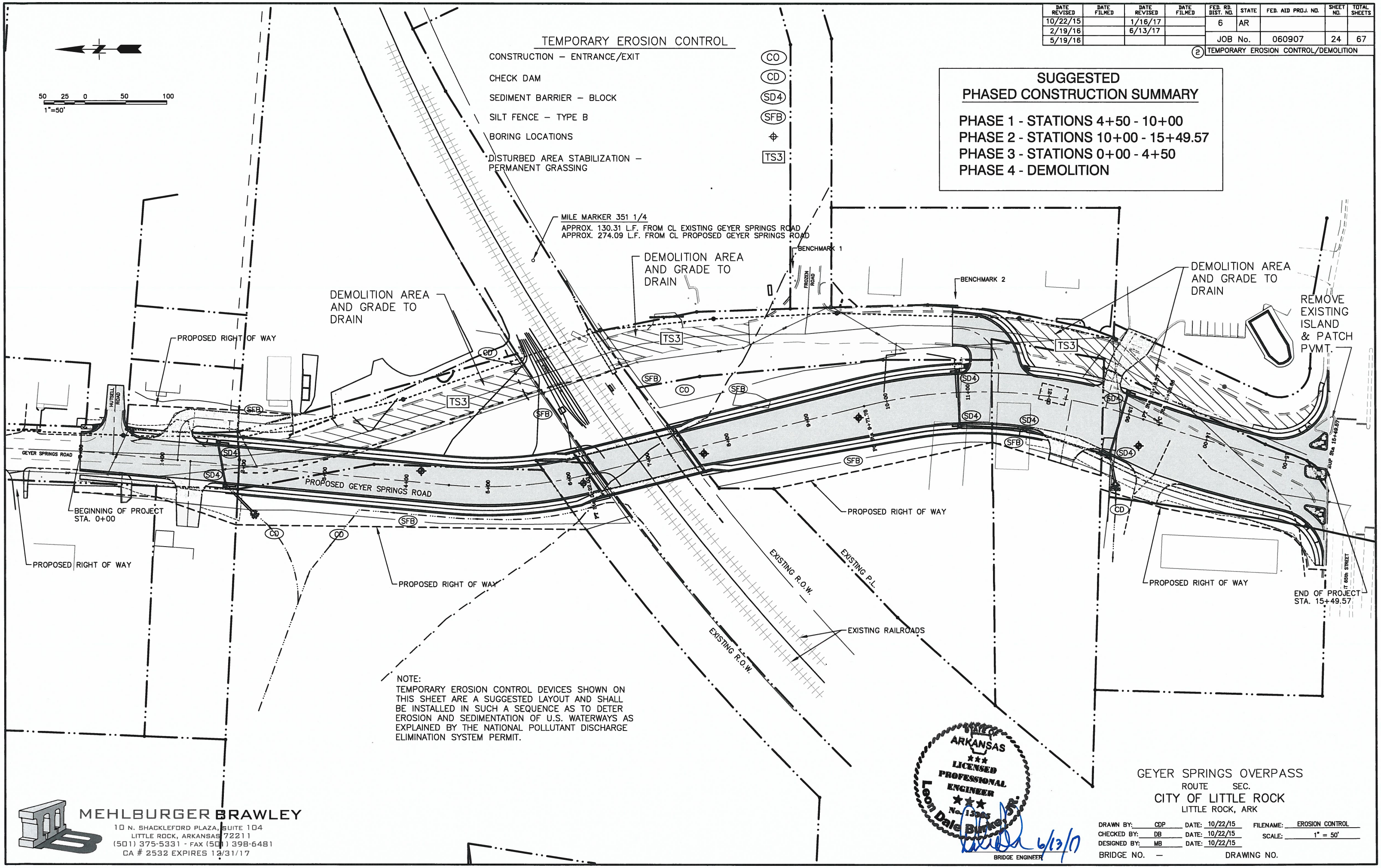

DATE REVISED	DATE FILMED	DATE REVISED	DATE FILMED	FED. RD. DIST. NO.	STATE	FED. AID PROJ. NO.	SHEET NO.	TOTAL SHEETS
10/22/15		1/16/17		6	AR			
2/19/16		6/13/17		JOB No.		060907	25	67
5/19/16								

(2) STRIPING PLAN

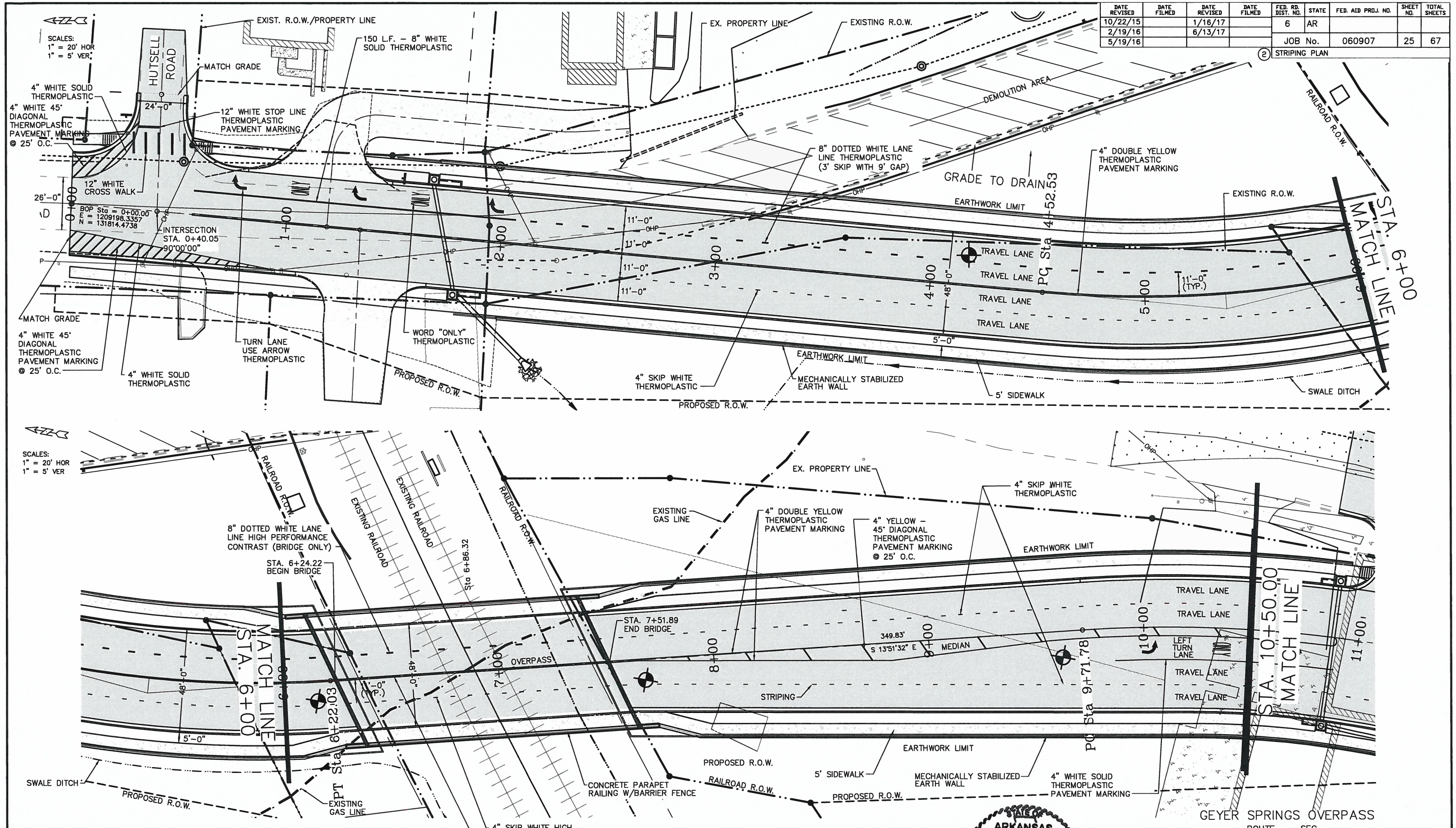

MEHLBURGER BRAWLEY
10 N. SHACKLEFORD PLAZA, SUITE 104
LITTLE ROCK, ARKANSAS 72211
(501) 375-5331 - FAX (501) 398-6481
CA # 2532 EXPIRES 12/31/17

STATE OF ARKANSAS
LICENSED PROFESSIONAL ENGINEER
No. 13383
Leon Dale Bunch
BRIDGE ENGINEER
6/13/17

GEYER SPRINGS OVERPASS
ROUTE SEC.
CITY OF LITTLE ROCK
LITTLE ROCK, ARK

DRAWN BY: CDP DATE: 10/22/15
CHECKED BY: DB DATE: 10/22/15
DESIGNED BY: MB DATE: 10/22/15
FILENAME: STRIPING 1
SCALE: 1" = 20'
BRIDGE NO. – DRAWING NO.

DATE REVISED	DATE FILMED	DATE REVISED	DATE FILMED	FED. RD. DIST. NO.	STATE	FED. AID PROJ. NO.	SHEET NO.	TOTAL SHEETS
10/22/15		1/16/17		6	AR			
2/19/16		6/13/17		JOB No.		060907	26	67
5/19/16								

4 STRIPING PLAN

SCALES:
1" = 20' HOR
1" = 5' VER

PI and EOP Sta = 15+49.57
N = 130292.2375
E = 1209177.2706
△ = 180°00'00"R

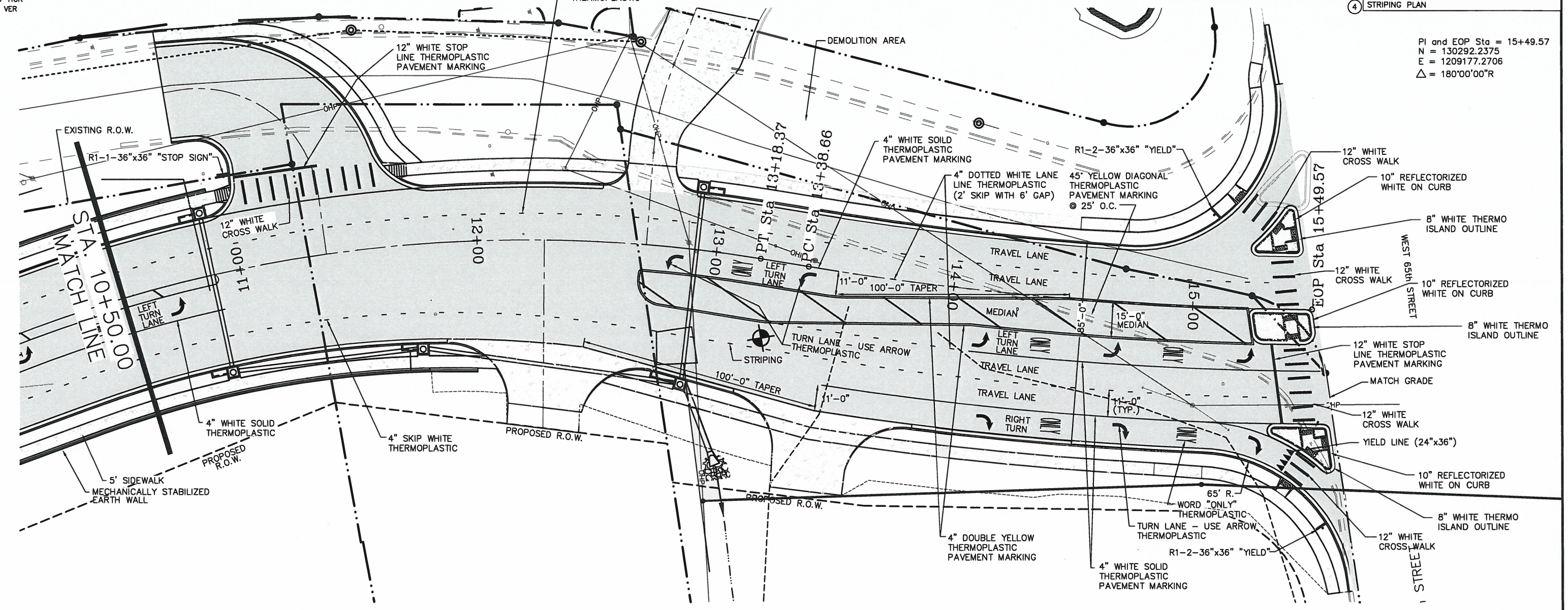

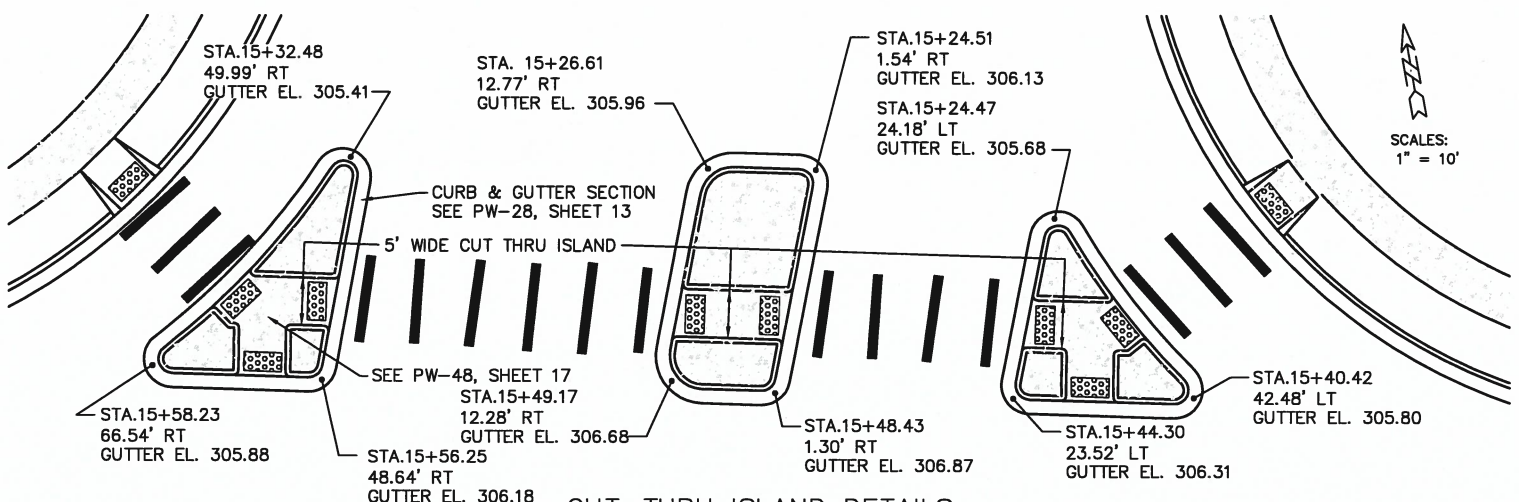

CUT-THRU ISLAND DETAILS

MEHLBURGER BRAWLEY
10 N. SHACKLEFORD PLAZA, SUITE 104
LITTLE ROCK, ARKANSAS 72211
(501) 375-5331 - FAX (501) 398-6481
CA # 2532 EXPIRES 12/31/17

STATE OF ARKANSAS
LICENSED PROFESSIONAL ENGINEER
No. 13363
Leon Dale Burke, Jr.
6/13/17
BRIDGE ENGINEER

GEYER SPRINGS OVERPASS
ROUTE SEC.
CITY OF LITTLE ROCK
LITTLE ROCK, ARK

DRAWN BY: CDP DATE: 10/22/15
CHECKED BY: DB DATE: 10/22/15
DESIGNED BY: MB DATE: 10/22/15
FILENAME: STRIPING 2
SCALE: 1" = 20'
BRIDGE NO. — DRAWING NO.

DATE REVISED	DATE FILMED	DATE REVISED	DATE FILMED	FED. RD. DIST. NO.	STATE	FED. AID PROJ. NO.	SHEET NO.	TOTAL SHEETS
10/22/15		1/16/17		6	AR	HPP-0346(1)		
2/19/16		6/13/17		JOB No.		060907	27	67
5/19/16				(2) QUANTITY SHEETS				

QUANTITIES

Item	Description	Unit	Qty
2.01	SITE PREPARATION (INCL. MOBILIZATION)	LS	1
3.01	UNCLASSIFIED EXCAVATION	CY	4,884
3.06	BORROW MATERIAL	CY	28,751
4.01	AGGREGATE BASE COURSE (CLASS 7)	TON	46,253
5.01	TACK COAT	GAL	575
6.01	ASPHALT SURFACE COURSE	TON	1,560
6.02	ASPHALT BINDER COURSE	TON	1,490
7.06	CONCRETE DRIVE AND APRON, 6"	SF	9,200
8.01	CONCRETE CURB AND GUTTER (CLASS 1)	LF	2,925
9.01	CONCRETE SIDEWALK, 4"	SF	13,115
10.02	CURB INLET - 4' BOX	EA	7
10.10	WING 6' EXTENSION	EA	4
10.14	WING 10' EXTENSION	EA	3
13.18C	STORM DRAIN PIPE, 18" RCP (CROSS DRAIN)	LF	579
13.18S	STORM DRAIN PIPE, 18" RCP (SIDE DRAIN)	LF	756
14.01	SOLID SODDING, SPECIAL	SY	5,000
16.01	MAINTENANCE OF TRAFFIC	LS	1
17.01	CUT AND REPAIR EXIST. STREET SURFACE	SY	10
18.10	WATER FOR DUST CONTROL	GAL	10,000
18.45	RIP RAP	CY	2
19.01	FINAL CLEANUP	LS	1
22.01	MAILBOX RELOCATION	EA	2
24.01	CONSTRUCTION ENTRANCE (CO)	EA	1
24.01	SILT FENCE - TYPE B (SFB)	LF	2,050
24.02	CHECK DAM (CD)	CY	4
24.09	SEDIMENT BARRIER, BLOCK (SD4)	EA	7
24.18	DISTURBED AREA STABILIZATION - PERMANENT GRASSING (TS3)	AC	2
24.20	TEMPORARY SEEDING	AC	1
26.01	TRENCH & EXCAVATION SAFETY SYSTEMS	LS	1
27.07	COLD MILLING ASPHALT PAVEMENT	SY	200
29.10	PROJECT INFORMATION KIOSK (PW-18)	LS	1
32.18	FLARED END SECTION, 18"	EA	2
49.00	TOPSOIL	CY	1,000

Item	Description	Unit	Qty
632.01	CONCRETE ISLAND	SY	11
641.00	WHEELCHAIR RAMPS (TYPE 3)	SY	35
719.04W	THERMOPLASTIC PAVEMENT MARKING WHITE (4")	LF	1,729
719.04Y	THERMOPLASTIC PAVEMENT MARKING YELLOW (4")	LF	4,440
719.08W	THERMOPLASTIC PAVEMENT MARKING WHITE (8")	LF	520
719.50	THERMOPLASTIC PAVEMENT MARKING WORDS	EA	4
719.60	THERMOPLASTIC PAVEMENT MARKING ARROWS	EA	10
719.80	THERMOPLASTIC PAVEMENT MARKING (YIELD LINES)(WHITE)	LF	120
726.01	STANDARD SIGN	SF	50
729.01	CHANNEL POST SIGN SUPPORT	EA	6
601	MOBILIZATION	LS	1
619	7'-0" STEEL CHAIN LINK FENCE	LF	251
802	CLASS S CONCRETE - BRIDGE	CY	123
802	CLASS S(AE) CONCRETE - MSE WALL	CY	1,066
802	CLASS S(AE) CONCRETE - BRIDGE	CY	241
803	CLASS 1 PROTECT.SURF.TREATMENT	GAL	21
804	REINFORCING STEEL - MSE WALL (GRADE 60)	LB	134,100
804	REINFORCING STEEL - BRIDGE (GRADE 60)	LB	9,180
804	EPOXY COATED REINFORCING STEEL - (GRADE 60)	LB	61,800
805	STEEL PILING (HP 14X73)	LF	740
805	PRE BORING	LF	81
806	METAL BRIDGE RAILING (TYPE H)	LF	1,656
806	TRANSITIONAL APPROACH RAILING	EA	4
807	STRUCTURAL STEEL IN BEAM SPANS (M270, GRADE 50W)	LB	489,800
808	ELASTOMERIC BEARINGS	CU IN	6,820
809	SILICONE JOINT SEALANT	LF	136
812	BRIDGE NAME PLATE (TYPE C)	EA	1
816	CONCRETE RIPRAP	CY	16
SP	RAILROAD COORDINATION & FLAGGING	LS	1
SP	MSE WALL	SF	50,242

MEHLBURGER BRAWLEY
10 N. SHACKLEFORD PLAZA, SUITE 104
LITTLE ROCK, ARKANSAS 72211
(501) 375-5331 - FAX (501) 398-6481
CA # 2532 EXPIRES 12/31/17

STATE OF ARKANSAS
LICENSED PROFESSIONAL ENGINEER
No. 13365
Leon Dale Burton, Jr.
6/13/17
BRIDGE ENGINEER

GEYER SPRINGS OVERPASS
ROUTE SEC.
CITY OF LITTLE ROCK
LITTLE ROCK, ARK

DRAWN BY: CDP DATE: 10/22/15
CHECKED BY: DB DATE: 10/22/15
DESIGNED BY: MB DATE: 10/22/15
FILENAME: QUANTITIES 1
SCALE: NOT TO SCALE
BRIDGE NO. — DRAWING NO.

DATE REVISED	DATE FILMED	DATE REVISED	DATE FILMED	FED. RD. DIST. NO.	STATE	FED. AID PROJ. NO.	SHEET NO.	TOTAL SHEETS
10/22/15		1/16/17		6	AR	HPP-0346(1)		
2/19/16		6/13/17		JOB No.		060907	28	67
5/19/16				(2) QUANTITY SHEETS				

SCHEDULE OF BRIDGE QUANITITIES - JOB NO. 060907

E	619	802	802	803	804	804	805	807	808	809	812	816	805
UNIT OF STRUCTURE	7'-0" STEEL CHAIN LINK FENCE	CLASS S CONCRETE BRIDGE	CLASS S (AE) CONCRETE BRIDGE	CLASS 1 PROTECTIVE SURFACE TREATMENT	REINFORCING STEEL - BRIDGE (GRADE 60)	EPOXY COATED REINFORCING STEEL - (GRADE 60)	STEEL PILING (HP 14X73)	STRUCTURAL STEEL IN BEAM SPANS (M270, GRADE 50W)	ELASTOMERIC BEARINGS	SILICONE JOINT SEALANT	BRIDGE NAME PLATE (TYPE C)	CONCRETE RIPRAP	PREBORING
	LIN. FT.	CU. YD.	CU. YD.	GAL.	LB	LB	LF	LB	CU IN	LF	EA	CY	LF
BENT NO. 1		61.50		0.50	4,590.00		387.00	1,100.00	3,410.00			8.00	45.00
BENT NO. 2		61.50		0.50	4,590.00		351.00	1,100.00	3,410.00			8.00	36.00
125'-3.5"	251.00		241.00	19.80		61,800.00		487,600.00		136.00	1.00		
TOTALS	**251.00**	**123.00**	**241.00**	**20.80**	**9,180.00**	**61,800.00**	**738.00**	**489,800.00**	**6,820.00**	**136.00**	**1.00**	**16.00**	**81.00**

SCHEDULE OF MSE WALL QUANTITIES - JOB NO. 060907

	802	804	806	806
UNIT OF STRUCTURE	CLASS S (AE) CONCRETE BRIDGE	EPOXY COATED REINFORCING STEEL - (GRADE 60)	METAL BRIDGE RAILING (TYPE H)	TRANSITIONAL APPROACH RAILING
	CU. YD.	LB	LF	EA
MSE PARAPET	177.50	44,500.00	1,656.00	4.00
MSE SIDEWALK	171.00	10,100.00		
MSE MOMENT SLAB	717.00	79,500.00		
TOTALS	**1,065.50**	**134,100.00**	**1,656.00**	**4.00**

MEHLBURGER BRAWLEY
10 N. SHACKLEFORD PLAZA, SUITE 104
LITTLE ROCK, ARKANSAS 72211
(501) 375-5331 - FAX (501) 398-6481
CA # 2532 EXPIRES 12/31/17

STATE OF ARKANSAS
LICENSED PROFESSIONAL ENGINEER
No. 13363
Leon Dale Burks, Jr.
6/13/17
BRIDGE ENGINEER

GEYER SPRINGS OVERPASS
ROUTE SEC.
CITY OF LITTLE ROCK
LITTLE ROCK, ARK

DRAWN BY: CDP DATE: 10/22/15 FILENAME: QUANTITIES 2
CHECKED BY: DB DATE: 10/22/15 SCALE: NOT TO SCALE
DESIGNED BY: MB DATE: 10/22/15
BRIDGE NO. — DRAWING NO.

DATE REVISED	DATE FILMED	DATE REVISED	DATE FILMED	FED. RD. DIST. NO.	STATE	FED. AID PROJ. NO.	SHEET NO.	TOTAL SHEETS
10/22/15		1/16/17		6	AR			
2/19/16		6/13/17		JOB No.		060907	29	67
5/19/16								

(2) SURVEY CONTROL

50 25 0 50 100
1"=50'

GEYER SPRINGS ROAD CENTERLINE CONSTRUCTION

PI NUMBER (#)	NORTHING	EASTING
BOP	131814.9540	1209198.3527
CURVE 1	131279.0880	1209149.7467
CURVE 2	130683.3787	1209296.7286
CURVE 3	130396.1379	1209196.4908
EOP	130292.2375	1209177.2706

DATUM IS STATE PLANE

BENCHMARK	NORTHING	EASTING	ELEVATION	DESCRIPTION
BENCHMARK 1	130946.3809	1209413.5190	290.76	FIRE HYDRANT
BENCHMARK 2	130748.5326	1209373.2989	297.80	FIRE HYDRANT

DATUM IS STATE PLANE

CONTROL POINT	NORTHING	EASTING	ELEVATION	DESCRIPTION
TP-5	131743.37	1209175.77	284.45	PK NAIL
TP-6	131259.79	1209265.27	295.74	PK NAIL
TP-7	130892.17	1209404.62	291.92	PK NAIL

CIRCULAR CURVE No.3
PI Sta = 14+44.32
N = 130396.1379
E = 1209196.4908
Δ = 08°45'25"L
Da = 04°09'07"
T = 105.66'
R = 1380.00'
L = 210.91'
E = 4.04
M = 4.03
PC = 13+38.66
Pt = 15+49.57
NO SUPER

MILE MARKER 351 1/4
APPROX. 130.31 L.F. FROM CL EXISTING GEYER SPRINGS ROAD
APPROX. 274.09 L.F. FROM CL PROPOSED GEYER SPRINGS ROAD

DEMOLITION AREA AND GRADE TO DRAIN

DEMOLITION AREA AND GRADE TO DRAIN

DEMOLITION AREA AND GRADE TO DRAIN

BENCHMARK 1

TP-7

BENCHMARK 2

FROZEN ROAD

EX. GEYER SPRINGS ROAD

PROPOSED RIGHT OF WAY

LIMITS OF CONSTRUCTION

HUTSELL ROAD

GEYER SPRINGS ROAD

TP-6

EX. GEYER SPRINGS ROAD

S05°10'58"W

PROPOSED GEYER SPRINGS ROAD

S13°51'36"E

S19°14'14"W

B-1

B-2

B-3

B-4

B-5

TP-5

PROPOSED RIGHT OF WAY

BEGINNING OF PROJECT
STA. 0+00

PROPOSED RIGHT OF WAY

LIMITS OF CONSTRUCTION

CIRCULAR CURVE No. 1
PI Sta = 5+38.07
N = 131279.0880
E = 1209149.7578
Δ = 19°02'34" LT.
Da = 11°14'04"
T = 85.54'
R = 510.00'
L = 169.50'
E = 7.12
M = 7.03
PC = 4+52.53
PT = 6+22.03
V = 35 MPH
S = NO SUPER

PROPOSED RIGHT OF WAY

CIRCULAR CURVE No.2
PI Sta = 11+50.06
N = 130683.3787
E = 1209296.7286
Δ = 33°05'50"R
Da = 09°32'57"
T = 178.28'
R = 600.00'
L = 346.59'
E = 25.93
M = 24.85
PC = 9+71.78
PT = 13+18.37
NO SUPER

EXISTING RAILROADS

PROPOSED RIGHT OF WAY

LIMITS OF CONSTRUCTION

END OF PROJECT
STA. 15+49.57

EST. 65th STREET

STATE OF ARKANSAS
LICENSED PROFESSIONAL ENGINEER
No. 17365
Leon Dale Burkey, Jr.
6/13/17
BRIDGE ENGINEER

MEHLBURGER BRAWLEY
10 N. SHACKLEFORD PLAZA, SUITE 104
LITTLE ROCK, ARKANSAS 72211
(501) 375-5331 - FAX (501) 398-6481
CA # 2532 EXPIRES 12/31/17

GEYER SPRINGS OVERPASS
ROUTE SEC.
CITY OF LITTLE ROCK
LITTLE ROCK, ARK

DRAWN BY: CDP DATE: 10/22/15
CHECKED BY: DB DATE: 10/22/15
DESIGNED BY: MB DATE: 10/22/15
FILENAME: SURVEY CONTROL
SCALE: 1" = 50'

BRIDGE NO. — DRAWING NO.

DATE REVISED	DATE FILMED	DATE REVISED	DATE FILMED	FED. RD. DIST. NO.	STATE	FED. AID PROJ. NO.	SHEET NO.	TOTAL SHEETS
10/22/15		1/16/17		6	AR			
2/19/16		6/13/17		JOB No.		060907	30	67
5/19/16								

(2) ROADWAY PLAN & PROFILE

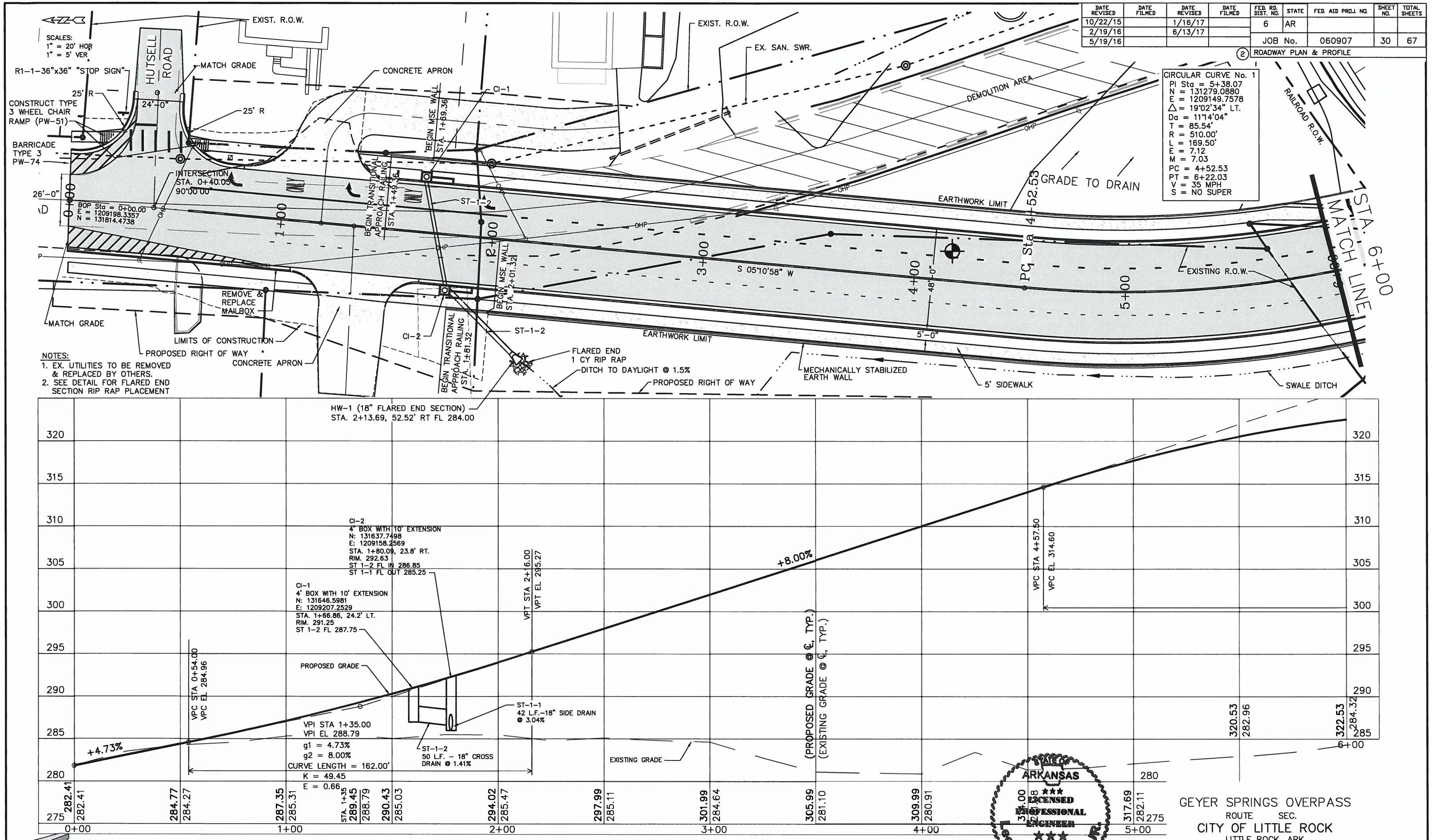

NOTES:
1. EX. UTILITIES TO BE REMOVED & REPLACED BY OTHERS.
2. SEE DETAIL FOR FLARED END SECTION RIP RAP PLACEMENT

MEHLBURGER BRAWLEY
10 N. SHACKLEFORD PLAZA, SUITE 104
LITTLE ROCK, ARKANSAS 72211
(501) 375-5331 - FAX (501) 398-6481
CA # 2532 EXPIRES 12/31/17

STATE OF ARKANSAS
LICENSED PROFESSIONAL ENGINEER
Leon Dale Burke, Jr.
No. 13365
6/13/17
BRIDGE ENGINEER

GEYER SPRINGS OVERPASS
ROUTE SEC.
CITY OF LITTLE ROCK
LITTLE ROCK, ARK

DRAWN BY: CDP DATE: 10/22/15
CHECKED BY: DB DATE: 10/22/15
DESIGNED BY: MB DATE: 10/22/15
BRIDGE NO. — DRAWING NO.
FILENAME: ROADWAY PLAN & PROFILE1
SCALE: 1" = 20'

DATE REVISED	DATE FILMED	DATE REVISED	DATE FILMED	FED. RD. DIST. NO.	STATE	FED. AID PROJ. NO.	SHEET NO.	TOTAL SHEETS
10/22/15		1/16/17		6	AR			
2/19/16		6/13/17		JOB No.		060907	31	73
5/19/16								

③ ROADWAY PLAN & PROFILE

SCALES:
1" = 20' HOR
1" = 5' VER

NOTE:
1. EX. UTILITIES TO BE REMOVED & REPLACED BY OTHERS.

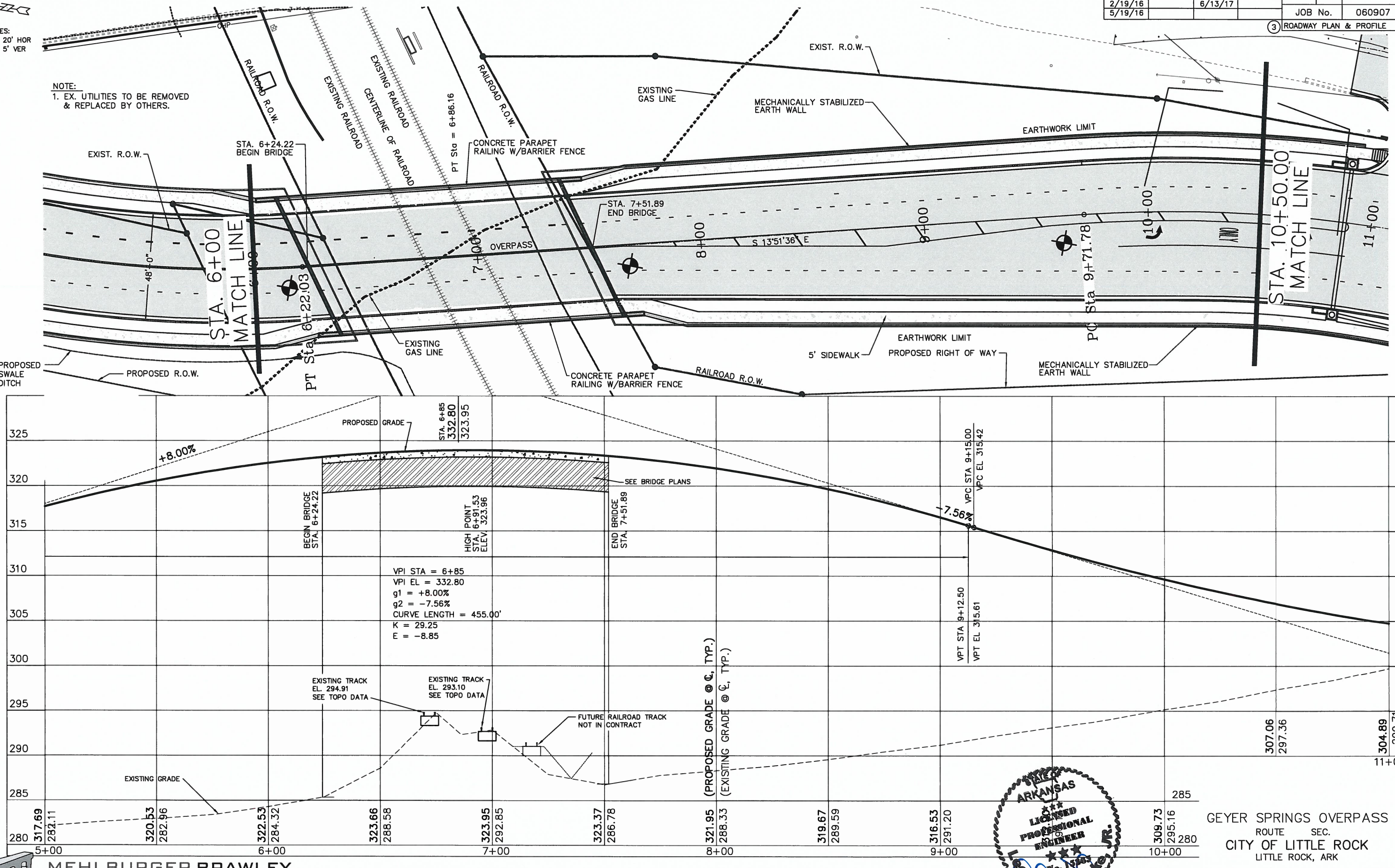

GEYER SPRINGS OVERPASS
ROUTE SEC.
CITY OF LITTLE ROCK
LITTLE ROCK, ARK

STATE OF ARKANSAS
LICENSED PROFESSIONAL ENGINEER
No. 13743
Leon Dale Burke, JR.
6/13/17
BRIDGE ENGINEER

DRAWN BY: CDP DATE: 10/22/15
CHECKED BY: DB DATE: 10/22/15
DESIGNED BY: MB DATE: 10/22/15
FILENAME: ROADWAY PLAN & PROFILE2
SCALE: 1" = 20'
BRIDGE NO. —
DRAWING NO.

MEHLBURGER BRAWLEY
10 N. SHACKLEFORD PLAZA, SUITE 100
LITTLE ROCK, ARKANSAS 72211
(501) 375-5331 - FAX (501) 398-6481
CA # 2532 EXPIRES 12/31/17

DATE REVISED	DATE FILMED	DATE REVISED	DATE FILMED	FED. RD. DIST. NO.	STATE	FED. AID PROJ. NO.	SHEET NO.	TOTAL SHEETS
10/22/15		1/16/17		6	AR			
2/19/16		6/13/17		JOB No.		060907	32	67
5/19/16								

4 ROADWAY PLAN & PROFILE

SCALES:
1" = 20' HOR
1" = 5' VER

NOTE: FOR STRIPING CALLOUTS, SEE STRIPING PLANS

CIRCULAR CURVE No.3
PI Sta = 14+44.32
N = 130396.1379
E = 1209196.4908
Δ = 08°45'25"L
Da = 04°09'07"
T = 105.66'
R = 1380.00'
L = 210.91'
E = 4.04
M = 4.03
PC = 13+38.66
Pt = 15+49.57
NO SUPER

PI and EOP Sta = 15+49.57
N = 130292.2375
E = 1209177.2706
Δ = 180°00'00"R

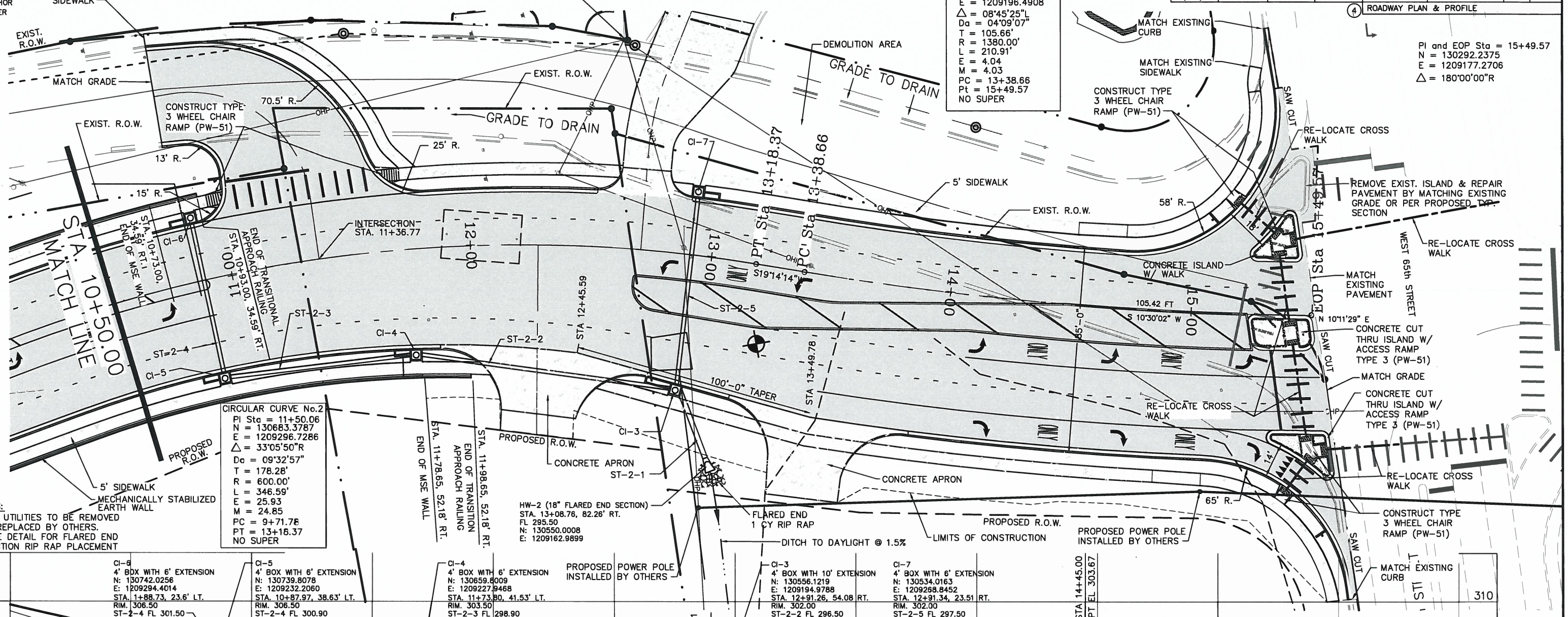

CIRCULAR CURVE No.2
PI Sta = 11+50.06
N = 130683.3787
E = 1209296.7286
Δ = 33°05'50"R
Da = 09°32'57"
T = 178.28'
R = 600.00'
L = 346.59'
E = 25.93
M = 24.85
PC = 9+71.78
PT = 13+18.37
NO SUPER

NOTES:
1. EX. UTILITIES TO BE REMOVED & REPLACED BY OTHERS.
2. SEE DETAIL FOR FLARED END SECTION RIP RAP PLACEMENT

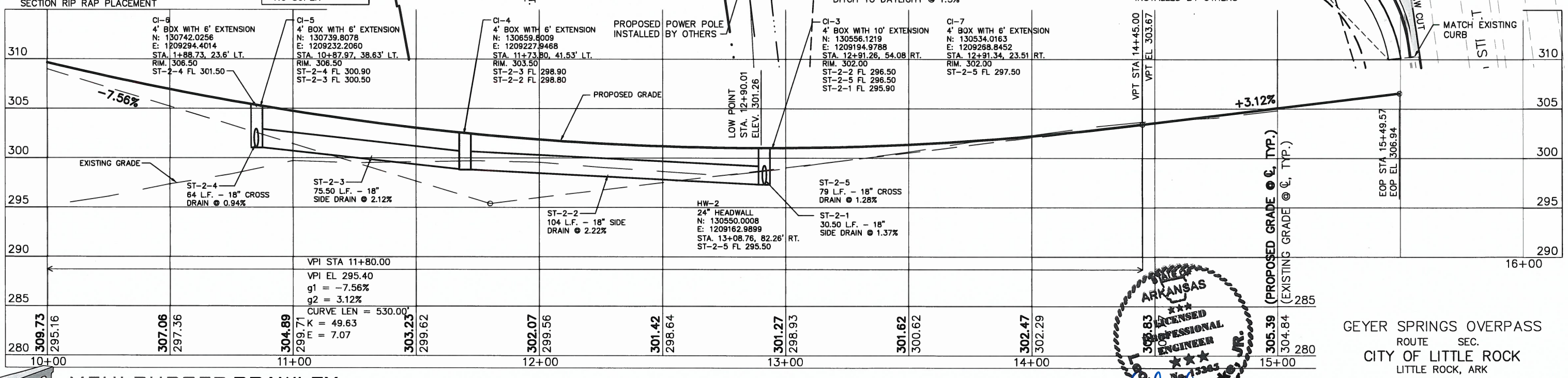

STATE OF ARKANSAS
LICENSED PROFESSIONAL ENGINEER
No. 13365
Ford Dale Burke, Jr.
6/13/17
BRIDGE ENGINEER

GEYER SPRINGS OVERPASS
ROUTE SEC.
CITY OF LITTLE ROCK
LITTLE ROCK, ARK

DRAWN BY: CDP DATE: 10/22/15
CHECKED BY: DB DATE: 10/22/15
DESIGNED BY: MB DATE: 10/22/15
FILENAME: ROADWAY PLAN AND PROFILE3
SCALE: 1" = 20'
BRIDGE NO. — DRAWING NO.

MEHLBURGER BRAWLEY
10 N. SHACKLEFORD PLAZA, SUITE 104
LITTLE ROCK, ARKANSAS 72211
(501) 375-5331 · FAX (501) 398-6481
CA # 2532 EXPIRES 12/31/17

DATE REVISED	DATE FILMED	DATE REVISED	DATE FILMED	FED. RD. DIST. NO.	STATE	FED. AID PROJ. NO.	SHEET NO.	TOTAL SHEETS
10/22/15		1/16/17		6	AR			
2/19/16		6/13/17		JOB No.		060907	33	67
5/19/16								

(2) PLAN & PROFILES – SIDE ROADS

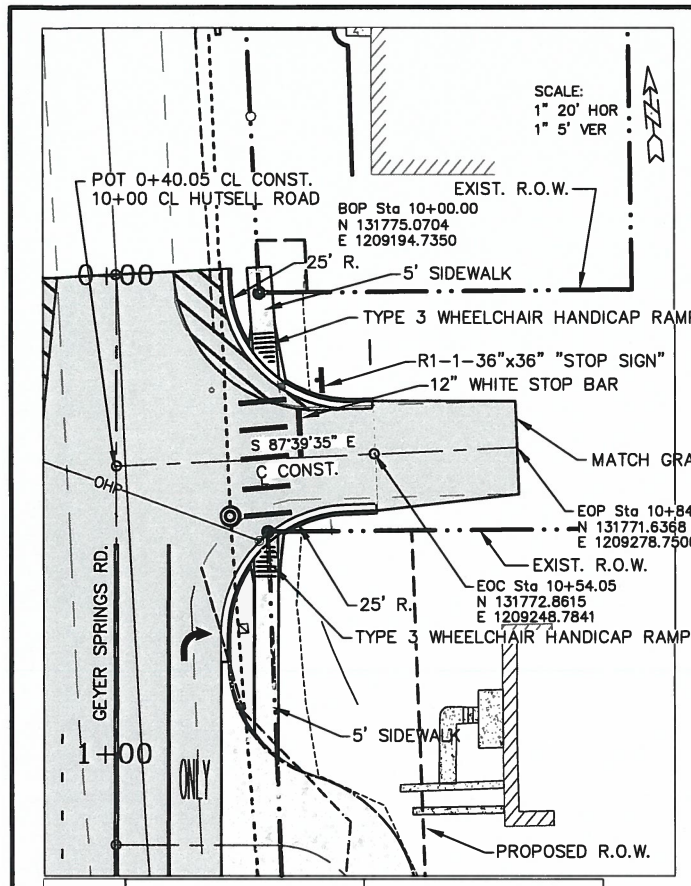

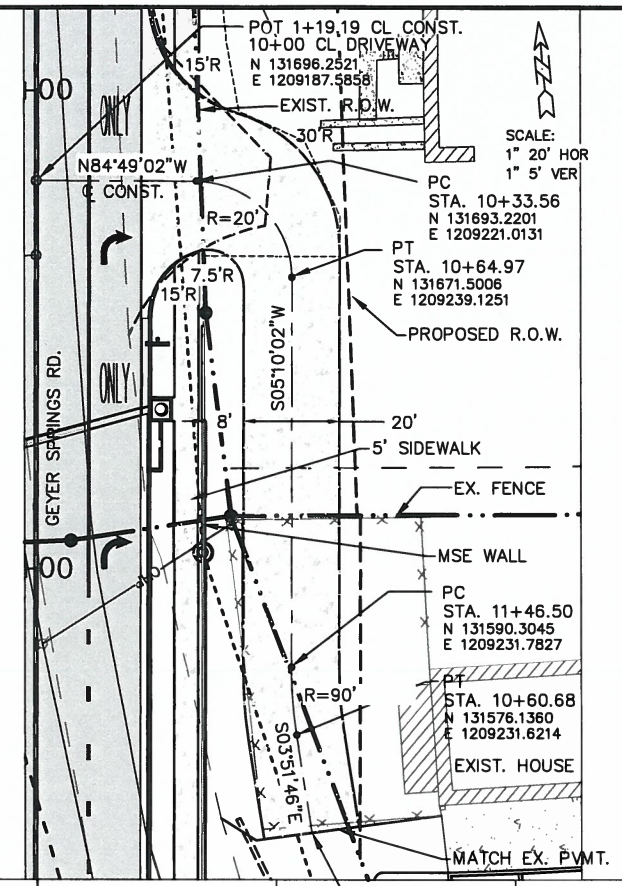

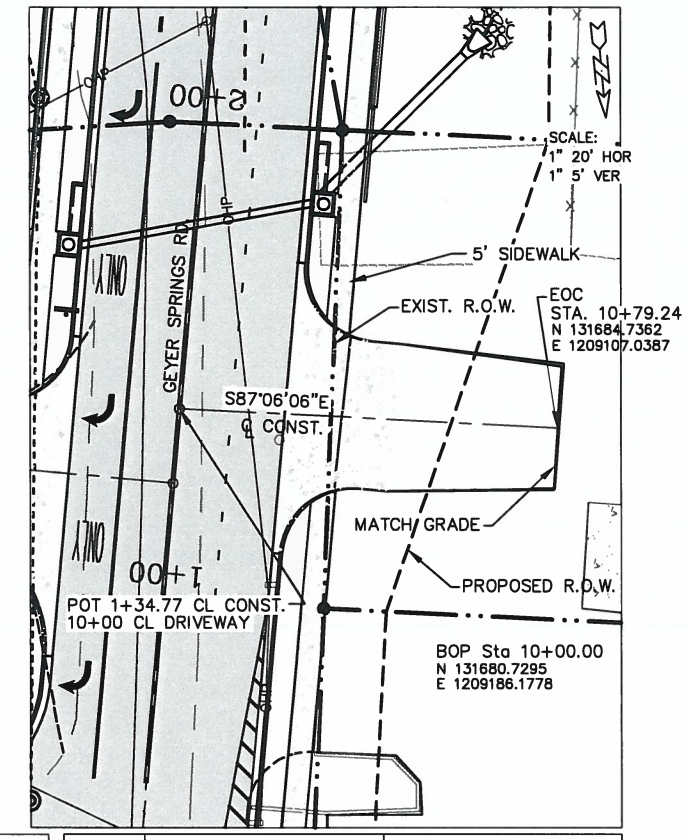

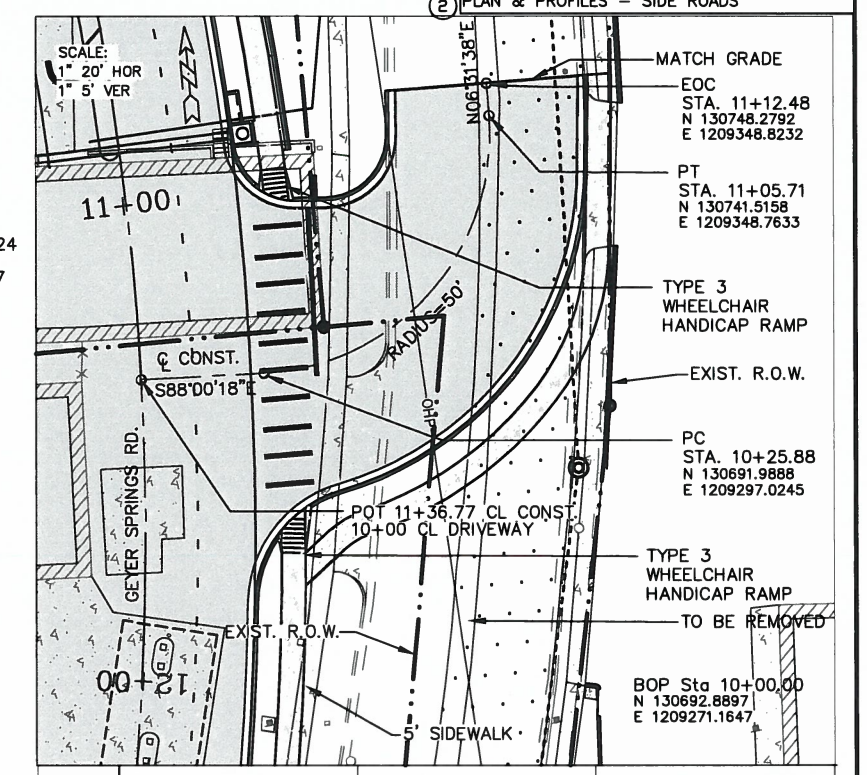

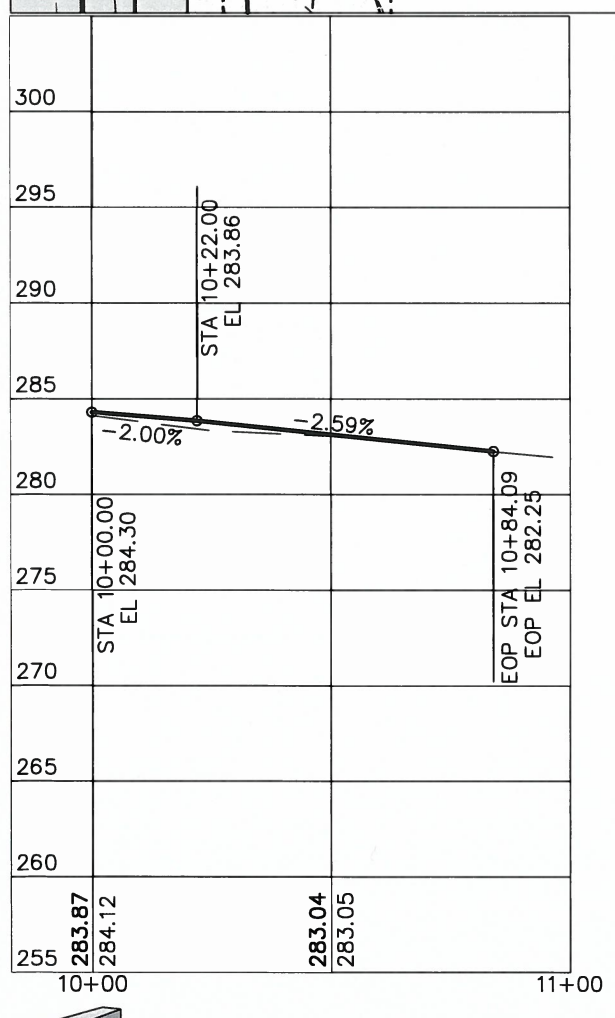

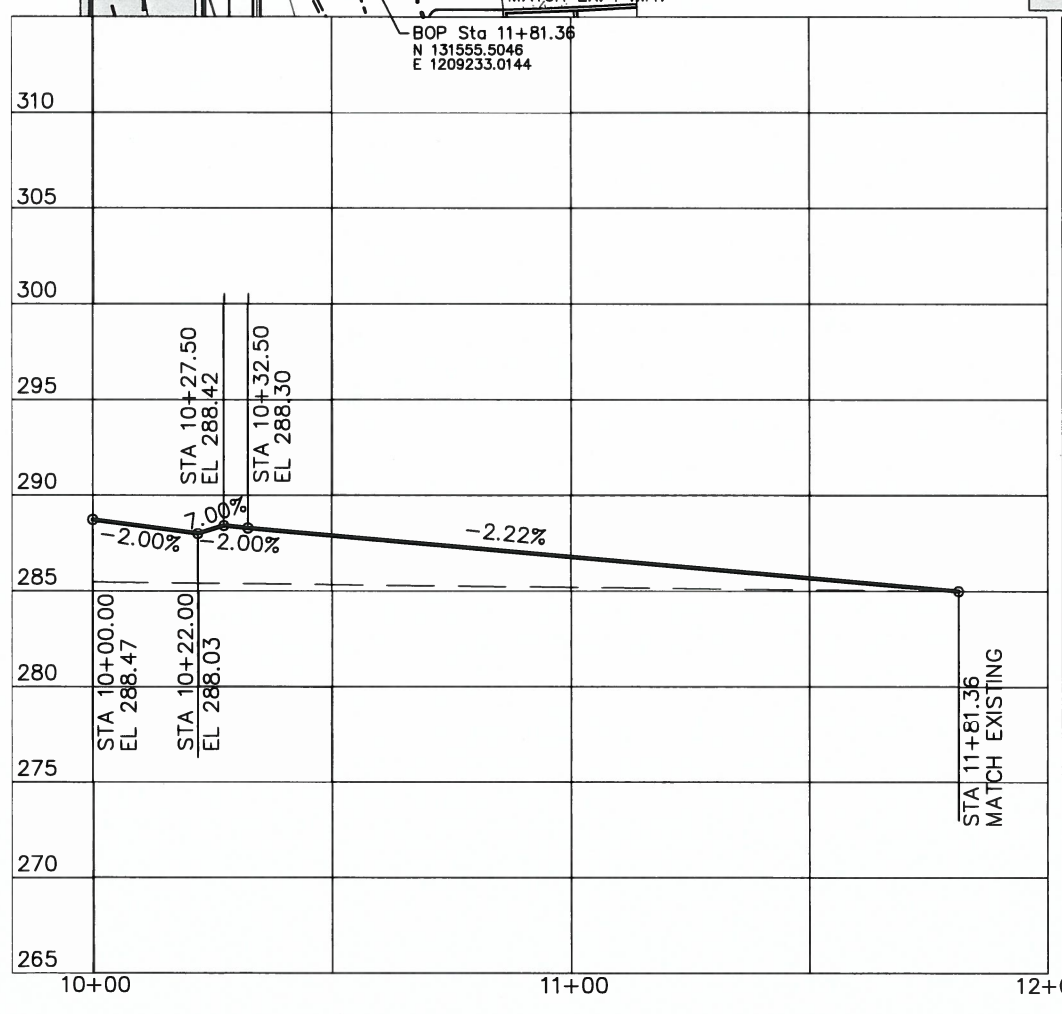

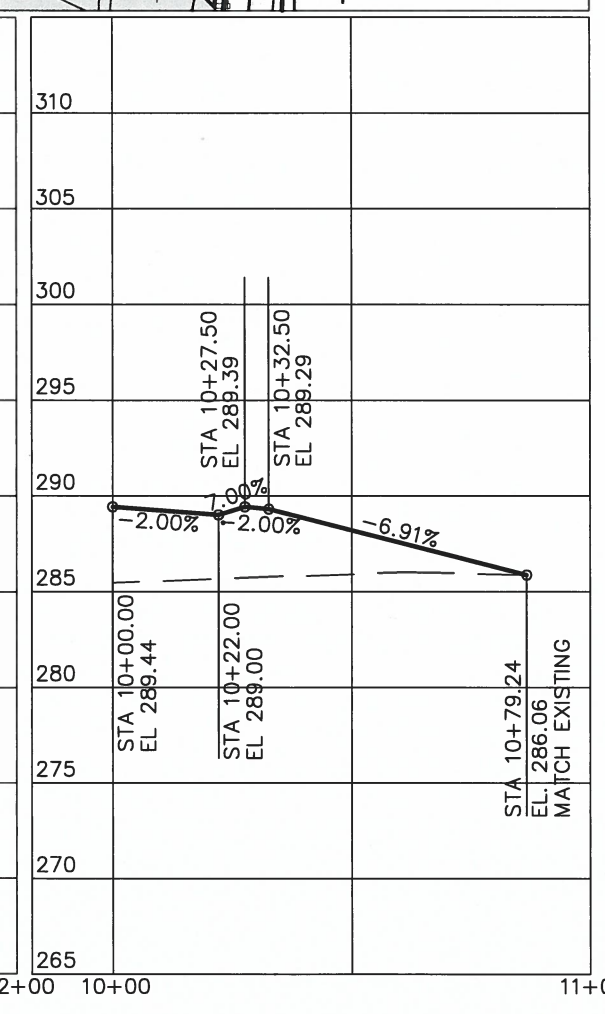

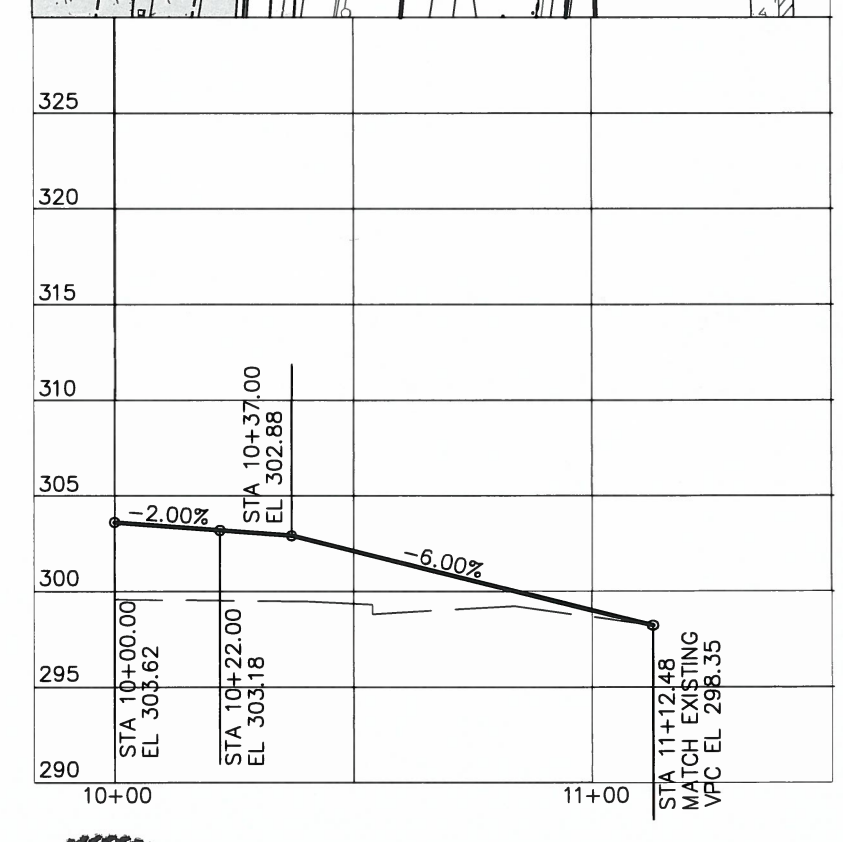

STATE OF ARKANSAS
LICENSED PROFESSIONAL ENGINEER
No. 13363
Leon Dale Burke, Jr.
6/13/17
BRIDGE ENGINEER

MEHLBURGER BRAWLEY
10 N. SHACKLEFORD PLAZA, SUITE 104
LITTLE ROCK, ARKANSAS 72211
(501) 375-5331 - FAX (501) 398-6481
CA # 2532 EXPIRES 12/31/17

GEYER SPRINGS OVERPASS
ROUTE SEC.
CITY OF LITTLE ROCK
LITTLE ROCK, ARK

DRAWN BY: CDP DATE: 10/22/15
CHECKED BY: DB DATE: 10/22/15
DESIGNED BY: MB DATE: 10/22/15
FILENAME: SIDEROAD PLAN AND PROFILE
SCALE: 1" = 20'
BRIDGE NO. –
DRAWING NO.

DATE REVISED	DATE FILMED	DATE REVISED	DATE FILMED	FED. RD. DIST. NO.	STATE	FED. AID PROJ. NO.	SHEET NO.	TOTAL SHEETS
10/22/15		1/16/17		6	AR			
2/19/16		6/13/17		JOB No.		060907	34	67
5/19/16								

(2) PLAN & PROFILES – SIDE ROADS

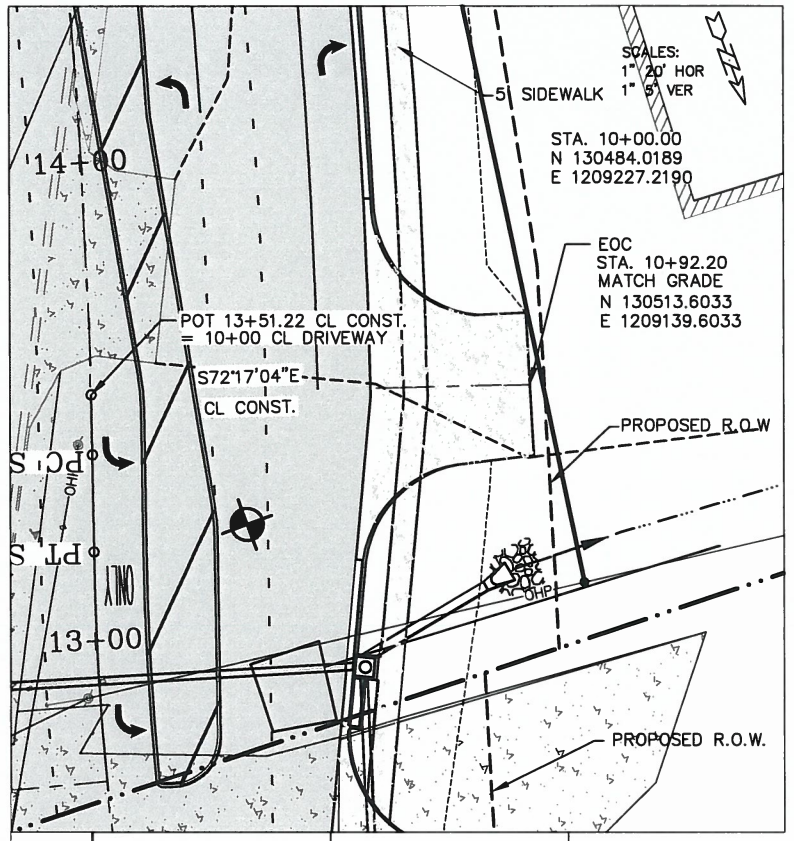

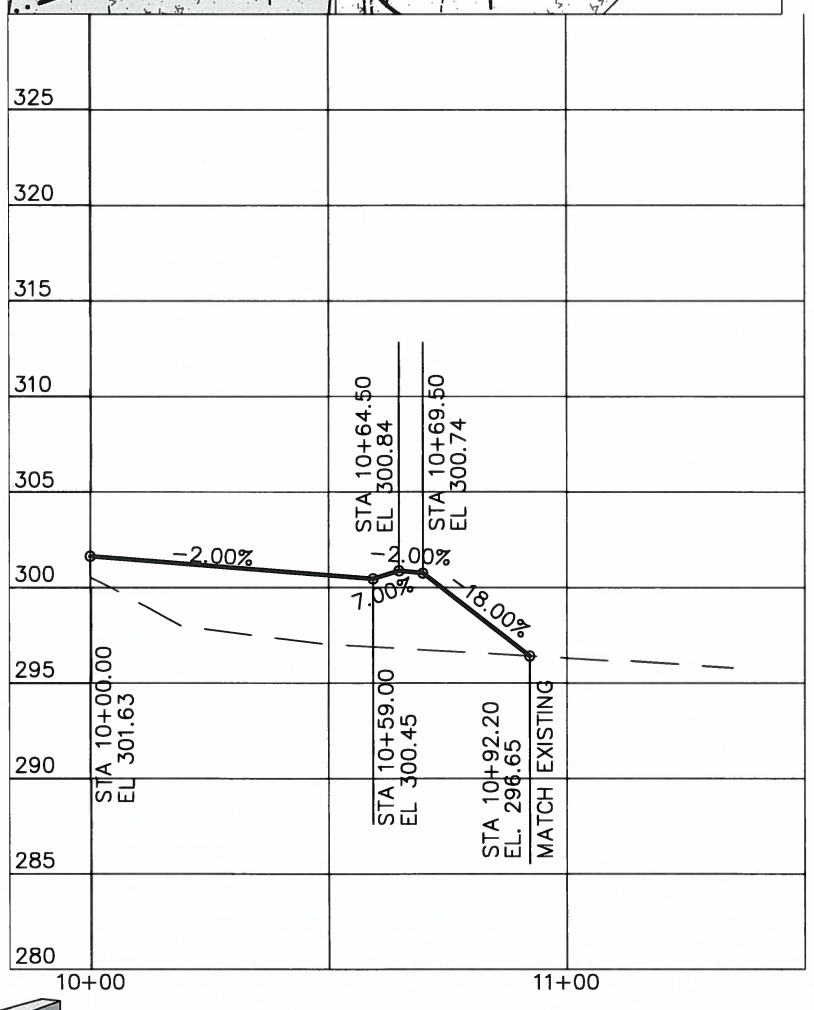

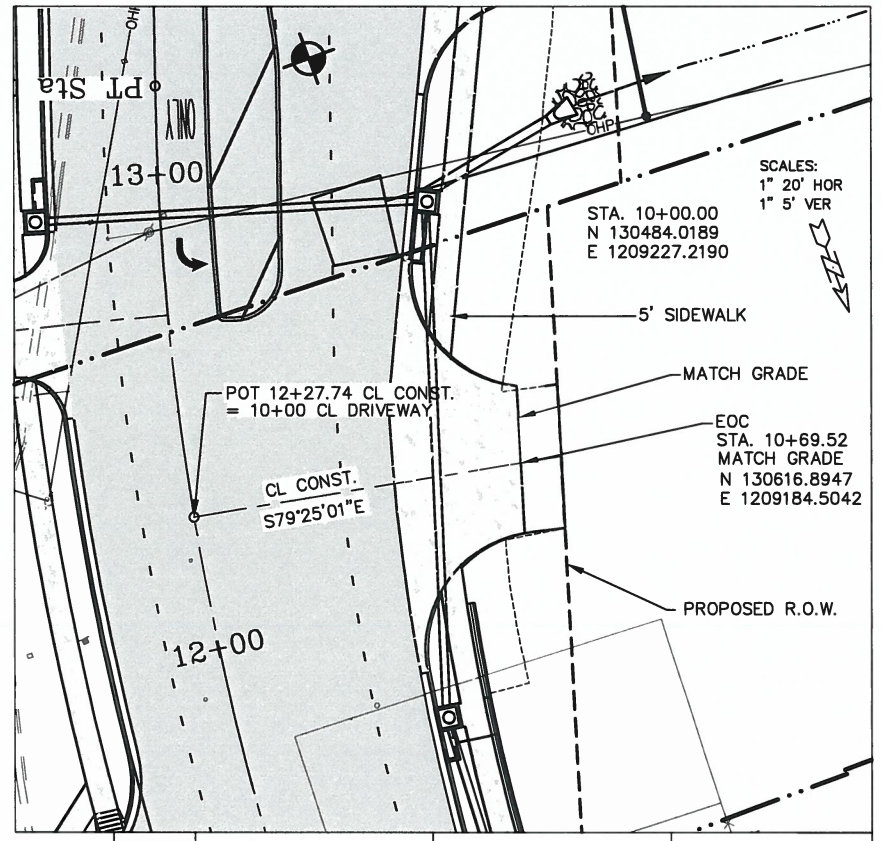

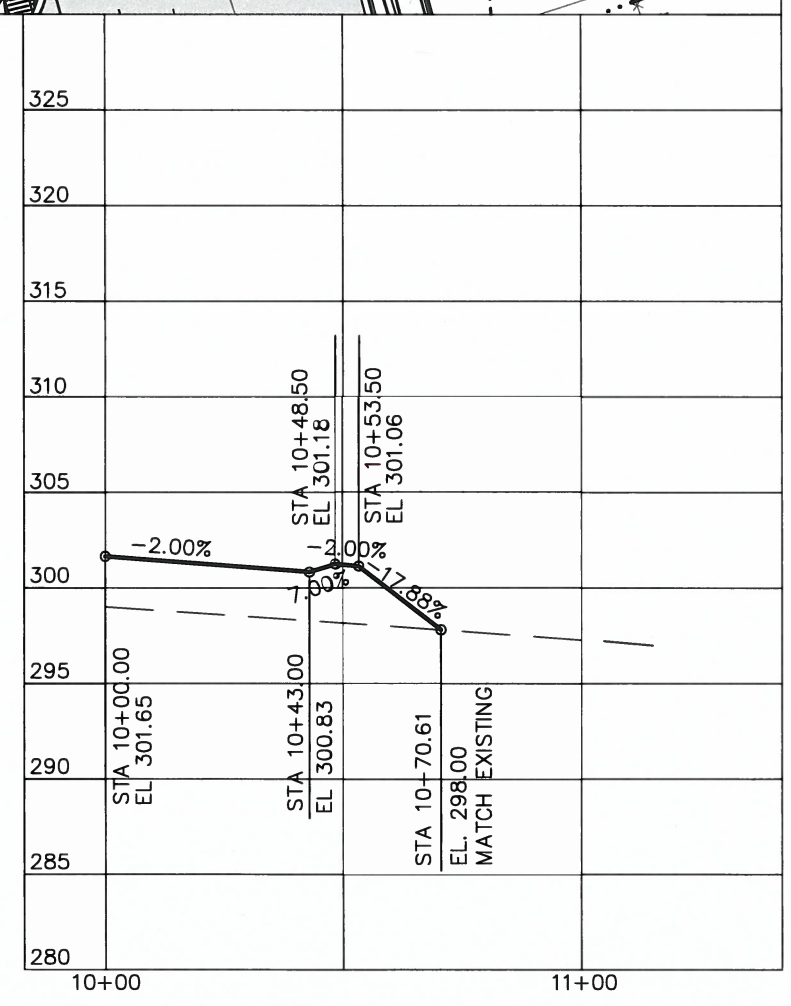

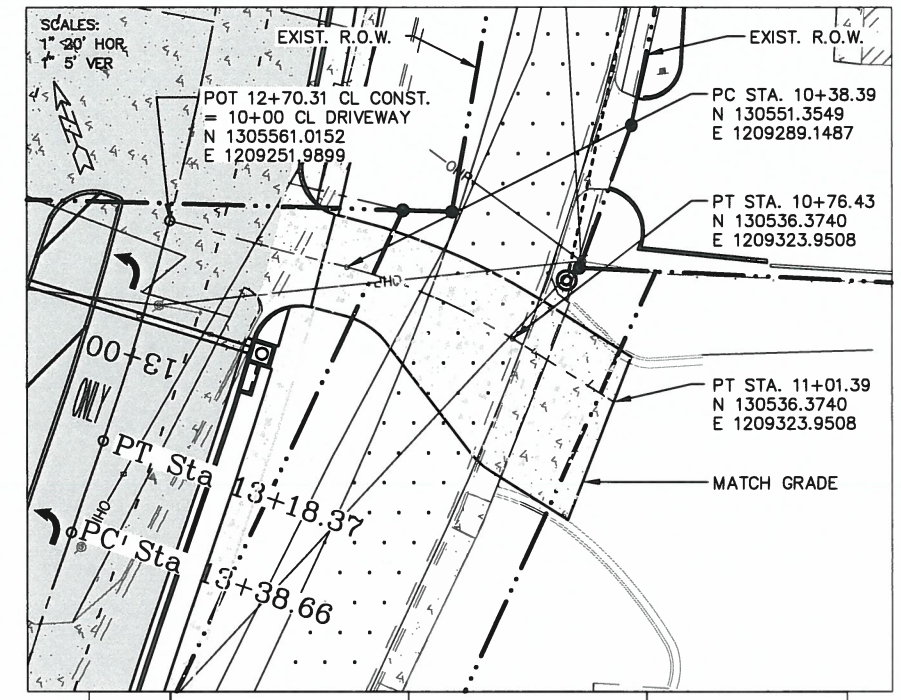

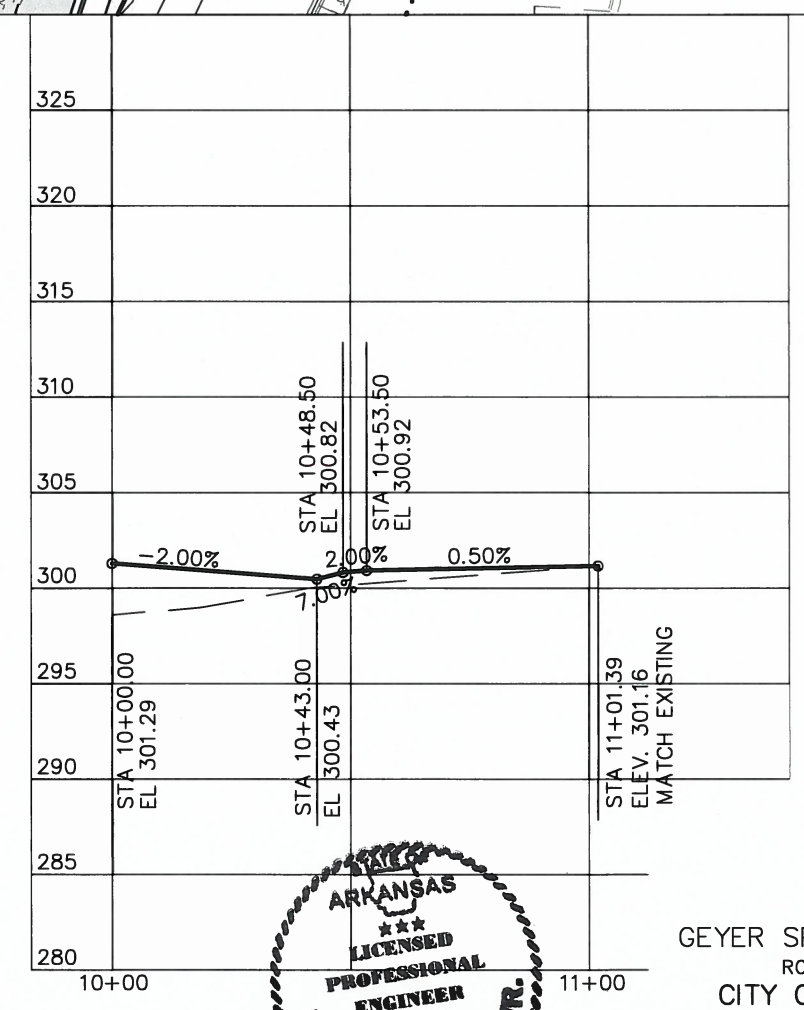

MEHLBURGER BRAWLEY
10 N. SHACKLEFORD PLAZA, SUITE 104
LITTLE ROCK, ARKANSAS 72211
(501) 375-5331 - FAX (501) 398-6481
CA # 2532 EXPIRES 12/31/17

STATE OF ARKANSAS
LICENSED PROFESSIONAL ENGINEER
No. 13363
Leon Daig Burke, Jr.
6/13/17
BRIDGE ENGINEER

GEYER SPRINGS OVERPASS
ROUTE SEC.
CITY OF LITTLE ROCK
LITTLE ROCK, ARK

DRAWN BY: CDP DATE: 10/22/15
CHECKED BY: DB DATE: 10/22/15
DESIGNED BY: MB DATE: 10/22/15
FILENAME: SIDEROAD PLAN AND PROFILE
SCALE: 1" = 20'
BRIDGE NO. – DRAWING NO.

DATE REVISED	DATE FILMED	DATE REVISED	DATE FILMED	FED. ROAD DIST. NO.	STATE	FED. AID PROJ. NO.	SHEET NO.	TOTAL SHEETS
10/22/15		1/16/17		6	AR			
2/19/16		6/13/17						
5/19/16				JOB. NO.		060907	35	67

(1) BRIDGE LAYOUT

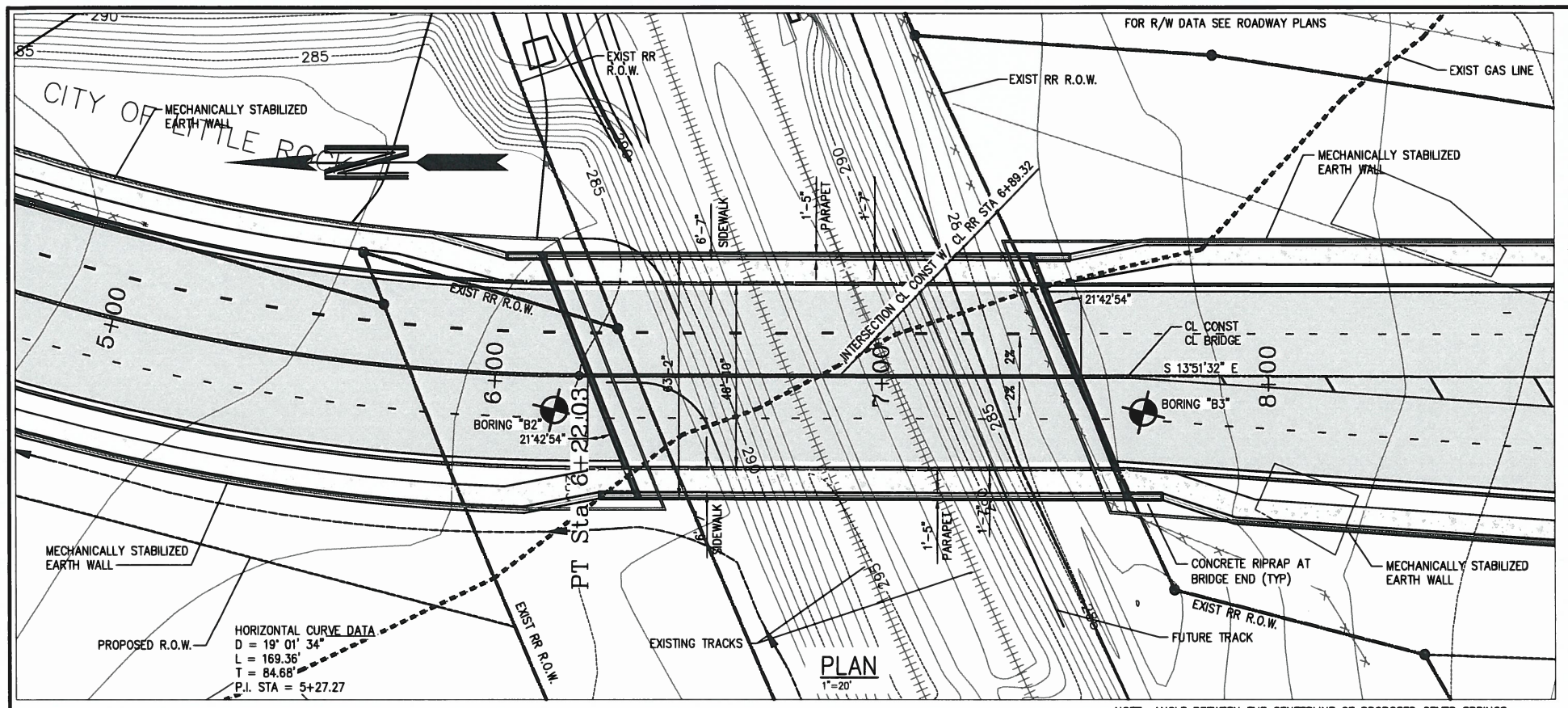

BRIDGE DECK: The concrete bridge deck shall be given a tine finish as specified for final finishing in Subsection 802.19 for Class 5 Tined Bridge Roadway Surface Finish. The sidewalk shall be given a Class 6 Broomed Finish.

NOTE: ANGLE BETWEEN THE CENTERLINE OF PROPOSED GEYER SPRINGS ROADWAY AND EXISTING RAILROAD TRACKS IS 68°00'10".

"N" VALUES

Boring B-2
0.0 – 8.0, N=50/6"
8.0 – 10.0, N=50/2"
10.0 – 50.0, N=25/0"

Boring B-3
0.0 – 2.0, N=18
2.0 – 5.0, N=50/7"
5.0 – 50.0, N=25/0"

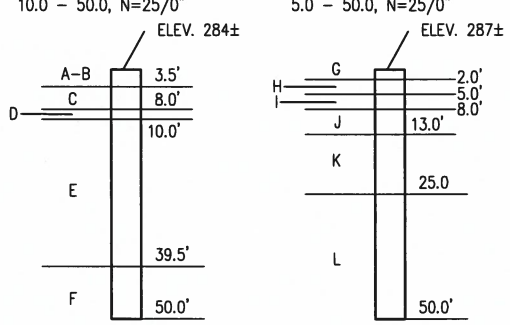

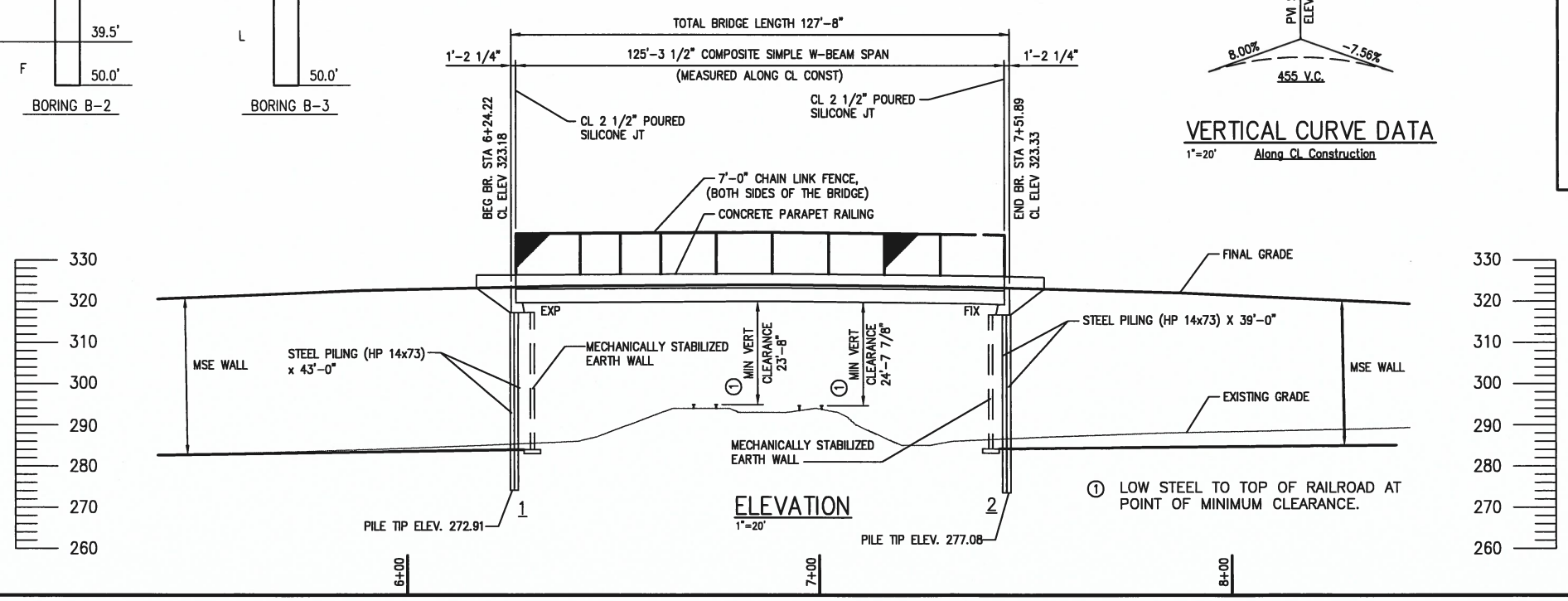

ELEVATION

1"=20'

(1) LOW STEEL TO TOP OF RAILROAD AT POINT OF MINIMUM CLEARANCE.

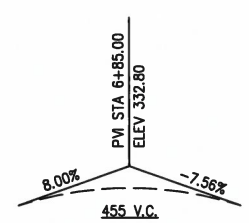

VERTICAL CURVE DATA

1"=20' Along CL Construction

GENERAL NOTES

BENCH MARK: Vertical Control Data are shown on Survey Control Data Sheet.

CONSTRUCTION SPECIFICATIONS: Arkansas State Highway and Transportation Department Standard Specifications for Highway Construction (2014 edition) with applicable supplemental specifications and special provisions. Unless otherwise noted in the plans. Section and Subsection refer to the Standard Construction Specifications.

DESIGN SPECIFICATIONS: AASHTO LRFD Bridge Design Specifications, Sixth Edition (2012) with 2013 interim revisions.
LIVE LOADING: HL-93
SEISMIC PERFORMANCE ZONE: ZONE 2

MATERIALS AND STRENGTHS:

Class S(AE) Concrete (superstructure)	f'c = 4,000 psi
Class S Concrete (substructure)	f'c = 3,500 psi
Reinforcing Steel (AASHTO M 31 or M 322, Type A)	fy = 60,000 psi
Structural Steel (AASHTO M 270, Gr. 50W)	Fy = 50,000 psi
Structural Steel (AASHTO M 270, Gr. 36)	Fy = 36,000 psi

BORING LOGS: Boring logs may be obtained from the City of Little Rock upon request.

STEEL PILING: All piling shall be HP14X73 (Grade 50) and shall be driven with an approved air, steam or diesel hammer to a minimum safe bearing capacity of 100 tons per pile and into material designated as shale on the boring legend. Lengths of pilings shown are for estimating quantities and for use in determining payment for cut off and build up in accordance with Section 805. Actual lengths to be determined in the field. Steel H-pile driving points shall be used on all piles. The contractor may drive the piling in the end bents in one of the following sequences:

Pilings may be driven after excavation to the bottom of the leveling pad is complete, after any required pre boring and prior to backfilling.

Piling may be driven after embankment construction. Pile casings are required for all piling. Casings shall be installed prior to or during embankment construction and shall extend from the top of the leveling pad to the bottom of the cap. Pile casing material shall be sufficient strength to retain its original form free from harmful distortions after compaction of the fill material surrounding it. The minimum inside diameter of the casing shall be 21". Piles shall be driven through the open casing after embankment to the bottom of cap is in place. After driving is completed, the pile casing shall be backfilled with approved non-shrink grout or other approved material in a single continuous operation to completely fill voids. Pile casing and backfill will not be paid for directly but shall be considered subsidiary to the item "Steel Piling (HP14X73)".

PREBORING: Preboring is required for all piling 3' into material designated as predominately shale in the boring legend. Quantities of preboring shown are for bidding purposes only. The actual size and depths of preboring are to be determined in the field by the Engineer. The Contractor shall be responsible from keeping the prebored holes free from debris prior to backfilling which may require casings or other methods. After driving is completed, the prebored hole shall be backfilled with Class S Concrete to completely fill voids. The backfill and any required casings will not be paid for directly but shall be considered subsidiary to the item "Preboring".

CLASS 1 PROTECTIVE ROADWAY SURFACE TREATMENT: Class 1 Protective Surface Treatment shall be applied to the roadway and sidewalk surface and to the roadway face and top of the concrete parapet rail.

DETAIL DRAWINGS:	DRAWING NO.
End Bents	BR5 (SHT 39)
Elastomeric Bearings	BR9 (SHT 43)
125' – 3 1/2" Simple Plate Girder Span	BR11 (SHT 45)
Steel Piling	55020

MAINTENANCE OF TRAFFIC: For details of maintenance of traffic, see Roadway Plans.

BORING LEGEND

A-Firm to stiff brown silty clay with organics and a little fine gravel, dry

B-Very stiff to hard gray and tan silty clay with fine to course gravel and ferrous stains and concretions

C-Very stiff to hard tan and gray fine sandy clay with ferrous stains and concretions

D-Soft light brown weathered shale with quartz veins

E-Medium soft light gray to gray shale with quartz veins

F-Medium soft dark gray shale with quartz Veins

G-Stiff to very stiff brown and tan fine sandy clay with crushed stone (fill)

H-Very stiff to hard reddish tan, tan and gray fine sandy clay with sandstone and shale fragments – auger refusal at 5 ft.

I-Medium soft brown and gray moderately weathered shale with ferrous staining

J-Medium soft to medium hard light gray fine-grained sandstone

K-Soft to medium soft dark gray slightly weathered shale with light gray weathered seams and occasional sandstone seams and partings

L-mostly dark gray shale below 25 ft.

MEHLBURGER BRAWLEY
10 N. SHACKLEFORD PLAZA, SUITE 100
LITTLE ROCK, ARKANSAS 72211
(501) 375-5331 - FAX (501) 398-6481
CA # 2532 EXPIRES 12/31/17

STATE OF ARKANSAS
LICENSED PROFESSIONAL ENGINEER
No. 15363
Leon Dale Burke, JR.
6/13/17
BRIDGE ENGINEER

GEYER SPRINGS OVERPASS (BR1)
ROUTE SEC.
CITY OF LITTLE ROCK
LITTLE ROCK, ARK

DRAWN BY: CDP DATE: 10/22/15
CHECKED BY: DB DATE: 10/22/15
DESIGNED BY: MB DATE: 10/22/15
FILENAME: BRIDGE PLAN & PROFILE
SCALE: 1" = 20'

BRIDGE NO. – DRAWING NO.

DATE REVISED	DATE FILMED	DATE REVISED	DATE FILMED	FED. ROAD DIST. NO.	STATE	FED. AID PROJ. NO.	SHEET NO.	TOTAL SHEETS
10/22/15		1/16/17		6	ARK			
2/19/16		6/13/17		JOB No.		060907	36	67
5/19/16								

(1) BRIDGE CROSS SECTION

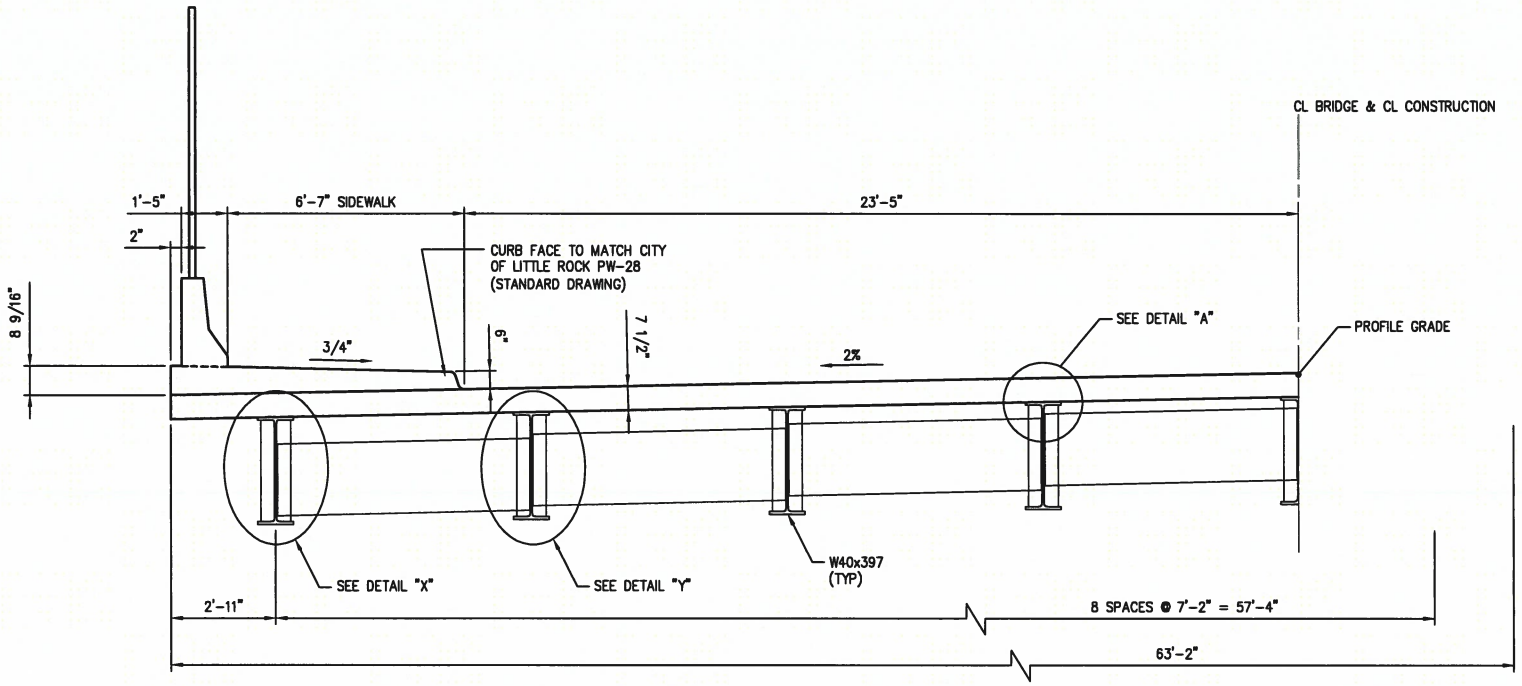

TYPICAL SECTION OF IMPROVEMENT
GEYER SPRINGS ROAD
BRIDGE SECTION (STA. 6+24.22 TO 7+51.89)

NOTE: Class 1 Protective Surface Treatment shall be applied to the roadway and sidewalk surface and the roadway face and top of the concrete parapet rail.

NOTE: At the Contractor's option, in lieu of providing bars S502E, one straight epoxy coated #5 bar top and bottom may be substituted for each bar. Payment for reinforcing will be based on the weight of bars S502E. Bars in top and bottom shall be epoxy coated.

Slab Reinforcing:

Longitudinal: S402E as shown (12" MAX. Spacing on top)

Transverse: S502E @ 12" o.c. bent up over beams
S501E @ 12" o.c. in top, S401 E @ 12" o.c. in bottom — Alternate
S503E @ 6" in top of overhangs (bundled with #5 bars)

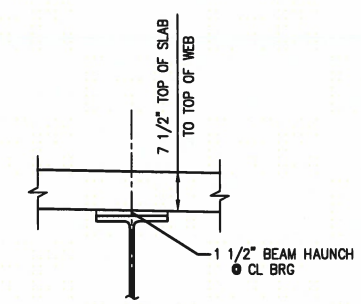

DETAIL "A"
NO SCALE

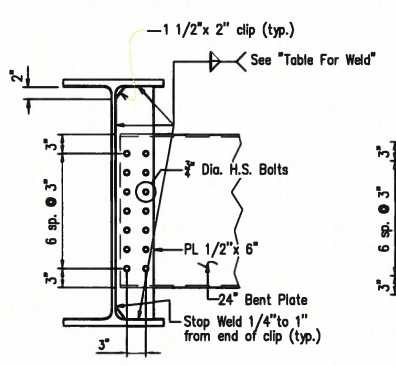

DETAIL X
NTS

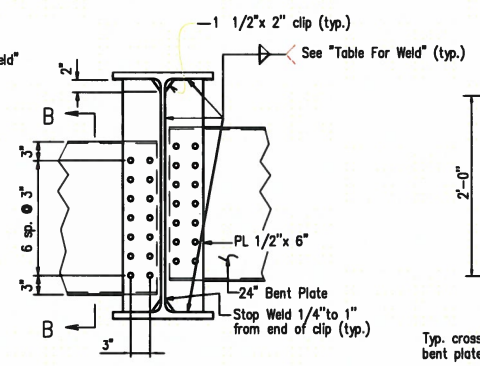

DETAIL Y
NTS

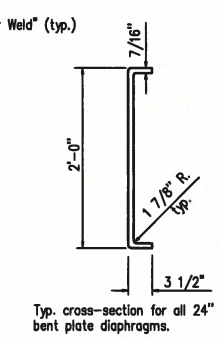

SECTION B-B
NTS

TABLE FOR WELD

Material Thickness of Thicker Part Joined (Inches)	Minimum Size of Fillet Weld (Inches)	Single Pass Weld Must Be Used
To 3/4" Inclusive	1/4"	
Over 3/4"	5/16"	

NOTE: When a fillet weld size, as shown on the plans, is larger than the minimum, the first pass shall be that specified for minimum size of fillet weld.

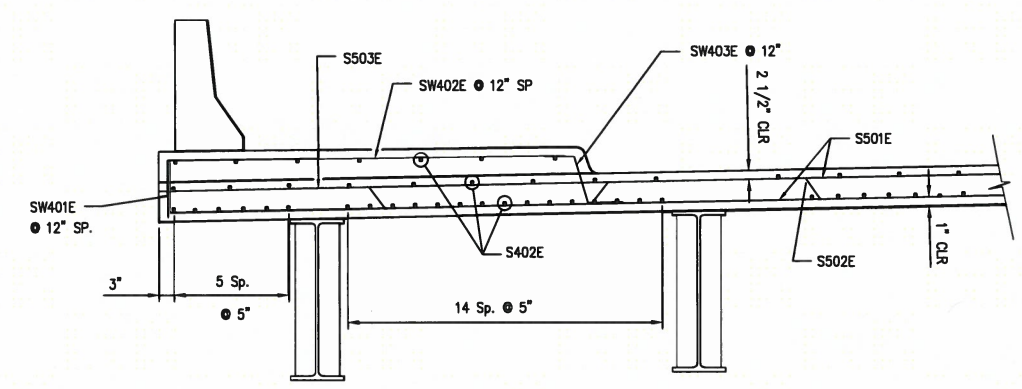

SIDEWALK AND SLAB REINFORCEMENT
NO SCALE

MEHLBURGER BRAWLEY
10 N. SHACKLEFORD PLAZA, SUITE 104
LITTLE ROCK, ARKANSAS 72211
(501) 375-5331 - FAX (501) 398-6481
CA # 2532 EXPIRES 12/31/17

STATE OF ARKANSAS
LICENSED PROFESSIONAL ENGINEER
No. 13265
Leon Dale Burke, Jr.
6/13/17
BRIDGE ENGINEER

GEYER SPRINGS OVERPASS (BR2)
ROUTE SEC.
CITY OF LITTLE ROCK
LITTLE ROCK, ARK

DRAWN BY: CDP DATE: 10/22/15
CHECKED BY: DB DATE: 10/22/15
DESIGNED BY: MB DATE: 10/22/15
FILENAME: BRIDGE CROSS SECTION
SCALE: NTS

BRIDGE NO. — DRAWING NO.

DATE REVISED	DATE FILMED	DATE REVISED	DATE FILMED	FED. ROAD DIST. NO.	STATE	FED. AID PROJ. NO.	SHEET NO.	TOTAL SHEETS
10/22/15		1/16/17		6	AR			
2/19/16		6/13/17		JOB No.		060907	37	67
5/19/16								

(1) BRIDGE LAYOUT

FOR R/W DATA SEE ROADWAY PLANS

MAIN-LINE-RAILROAD-INFORMATION

TOP OF RAIL ELEVATIONS

NOTE: STA. 0+00 IS THE C.L. OF EXISTING GEYER SPRINGS & RAILROAD TRACKS

STATION	LEFT ELEV.	RIGHT ELEV.
0+00	295.16	294.87
0+97 EAST	294.72	294.49
2+04 EAST	294.23	293.91
3+34 EAST	293.79	293.51
4+52 EAST	293.35	293.07
5+97 EAST	292.67	292.67
7+61 EAST	292.38	292.28
8+86 EAST	292.20	292.09
10+23 EAST	291.98	291.97
1+05 WEST	295.59	295.27
2+45 WEST	296.12	295.95
3+70 WEST	296.61	296.33
5+05 WEST	297.01	295.76
6+25 WEST	297.61	297.23
7+40 WEST	298.02	297.68
8+75 WEST	298.50	298.03
10+00 WEST	298.83	298.53

THE TOP OF RAIL INFORMATION LISTED ABOVE IS BASED ON THE NORTH LINE OF THE RAILROAD & THE NEW PROPOSED GEYER SPRINGS CENTERLINE.

NOTE: THE ELEVATIONS OF THE EXISTING TOP OF RAIL PROFILE SHALL BE VERIFIED BY THE CONTRACTOR PRIOR TO BEGINNING OF CONSTRUCTION.

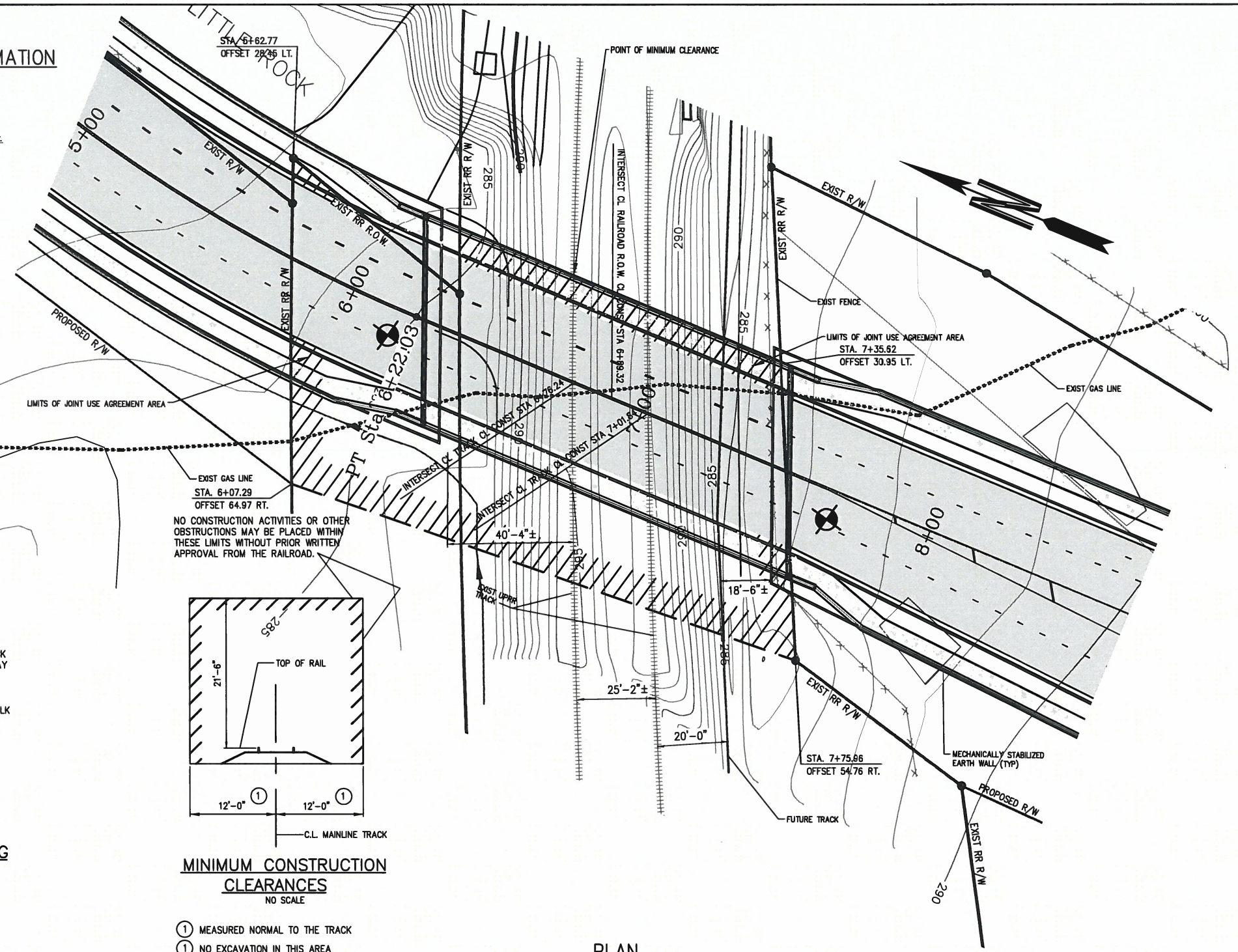

PLAN
1"=20'

NOTE: A CHAIN LINK FENCE IS REQUIRED ON BOTH SIDES OF THE BRIDGE. THE FENCE IS TO BE MOUNTED ON TOP OF THE CONCRETE PARAPET RAIL (SEE SECTION NORMAL TO THE TRACKS)

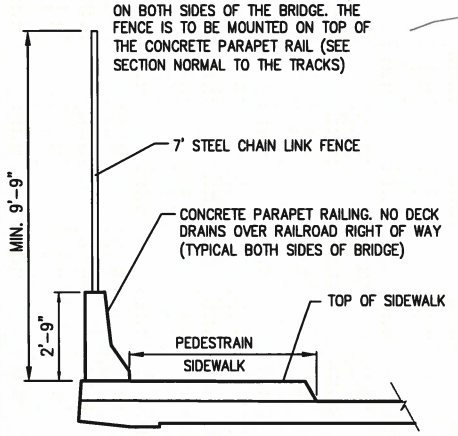

TYPICAL SECTION SHOWING CHAIN LINK FENCE
NO SCALE

MINIMUM CONSTRUCTION CLEARANCES
NO SCALE

(1) MEASURED NORMAL TO THE TRACK
(1) NO EXCAVATION IN THIS AREA

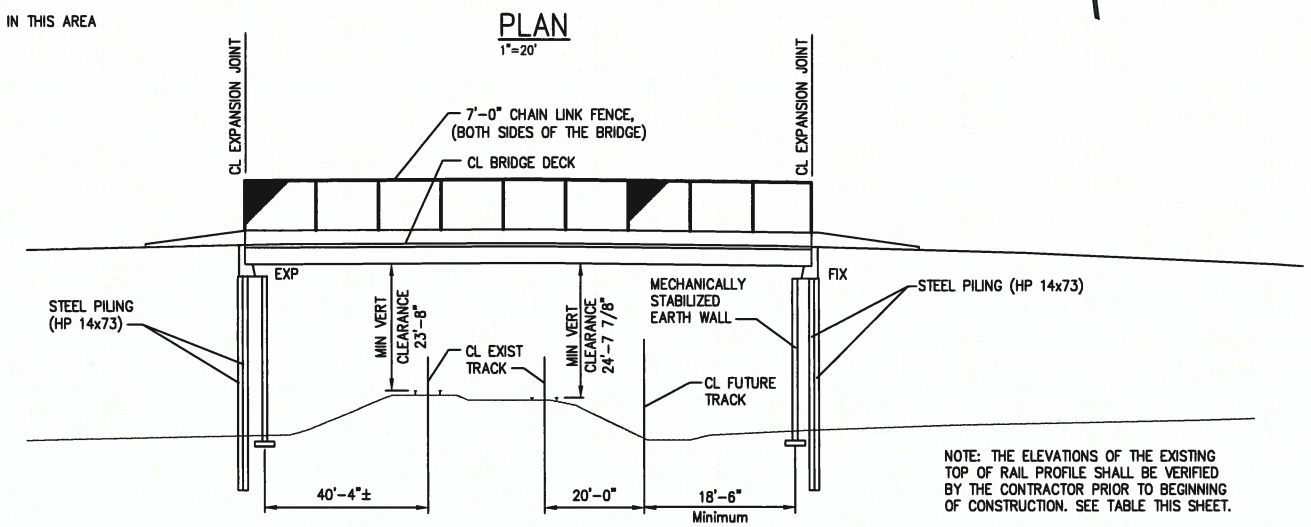

SECTION NORMAL TO TRACKS
NTS

NOTE: THE ELEVATIONS OF THE EXISTING TOP OF RAIL PROFILE SHALL BE VERIFIED BY THE CONTRACTOR PRIOR TO BEGINNING OF CONSTRUCTION. SEE TABLE THIS SHEET.

Railroad General Notes:

1. All Demolitions within the Railroad right-of-way and/or demolitions that may impact the railroad tracks or operations shall comply with the Railroad's demolitions requirements.

2. Erections over the Railroad's right-of-way shall be designed to cause no interruptions to the Railroad's operations. Erection over the Railroad's track shall be developed such that it enables the track to remain open to traffic per the Railroad's requirements.

3. The Contractor must submit a proposed method of erosion and sediment control and have the method approved by the Railroad prior to beginning any grading on the project site.

4. Railroad requirements do not allow work within 50 feet of the tracks centerline when a train passes the work site and all personnel must clear the area within 25 feet of the track centerline and secure all equipment when trains are present.

5. The following statement is in the "State Rail Agreement", The State shall not plow ice, snow, or sleet over the sides of the structure. In consideration of this practice, the Carrier waives its request for the State to attach splash boards to sides of the structure.

6. Shoring shall comply with the Union Pacific Railroad requirements. Construction shall comply with the requirements of SP Job 060907 "Insurance Construction and Flagging requirements on Railroad property (UPRR)". Railroad review and approval of Shoring, Erection and Falsework is required. Allow a minimum of four weeks for the review and approval of each submittal.

7. Currently there are no know utilities on the Railroad right-of-way other than shown.

8. A chain link fence is required on both sides of the Bridge. The Fence is to be mounted on top of the concrete parapet rail and shall extend the full width of the Railroad right-of-way or end of the bridge, whichever is longer.

9. The proposed Bridge construction will not change the quantity and/or characteristics of the flow within the Railroad right-of-way.

10. The Bridge shall have Closed Parapet Rail without openings or deck drains on both sides over Railroad right-of-way.

11. All permanent clearances shall be verified before project closing.

12. For Railroad Coordination refer to the Railroad Minimum Requirements of SP Job 060907 "Insurance, Construction and Flagging Requirements on Railroad Property (UPRR)".

EXHIBIT "A"

MEHLBURGER BRAWLEY
10 N. SHACKLEFORD PLAZA, SUITE 104
LITTLE ROCK, ARKANSAS 72211
(501) 375-5331 - FAX (501) 398-6481
CA # 2532 EXPIRES 12/31/17

STATE OF ARKANSAS ★★★ LICENSED PROFESSIONAL ENGINEER ★★★ No. 13365 Leon Dale Burke, Jr.

6/13/17
BRIDGE ENGINEER

GEYER SPRINGS OVERPASS (BR3)
ROUTE SEC.
CITY OF LITTLE ROCK
LITTLE ROCK, ARK

DRAWN BY: CDP DATE: 10/22/15
CHECKED BY: DB DATE: 10/22/15
DESIGNED BY: MB DATE: 10/22/15
FILENAME: R-R & BRIDGE P&P
SCALE: NTS

BRIDGE NO. — DRAWING NO.

DATE REVISED	DATE FILMED	DATE REVISED	DATE FILMED	FED. ROAD DIST. NO.	STATE	FED. AID PROJ. NO.	SHEET NO.	TOTAL SHEETS
10/22/15		1/16/17		6	AR			
2/19/16		6/13/17		JOB. NO.		060907	38	67
5/19/16								

① RETAINING WALLS

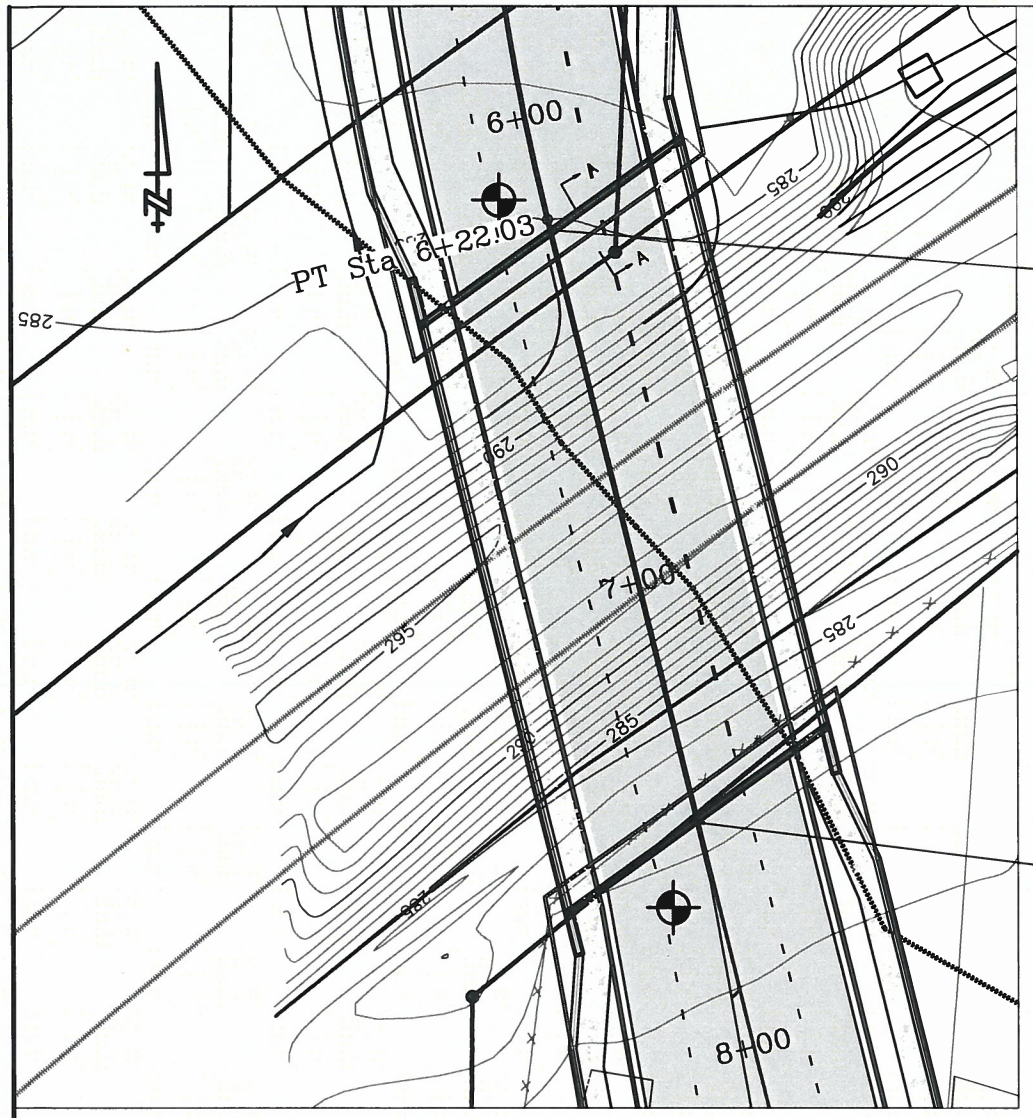

① for Borings in vicinity of retaining wall, see Bridge Layout Sheet 35

② Not Used

③ 1/2" Preformed Joint Filter (AASHTO M 153 Type 1) at front of cap.

④ The Contractor has the option of using a cut slope or shoring to maintain stability of the cut. Any excavation beyond the limits of the reinforcements zone or any shoring used will not be paid for directly, but shall be considered incidential to the item "Retaining Wall". See Job SP "Retaining Walls" for additional information.

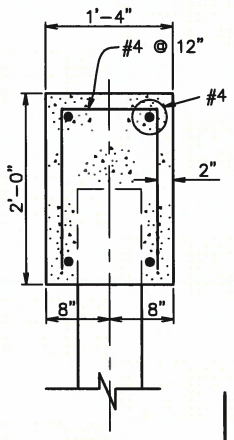

COPING DETAIL
No Scale

NOTES: Reinforcing steel and Class S(AE) Concrete for coping shall not be paid for directly, but will be considered subsidiary to the Item "Retaining Wall".

Precast coping may be substituted for cast-in-place coping shown.

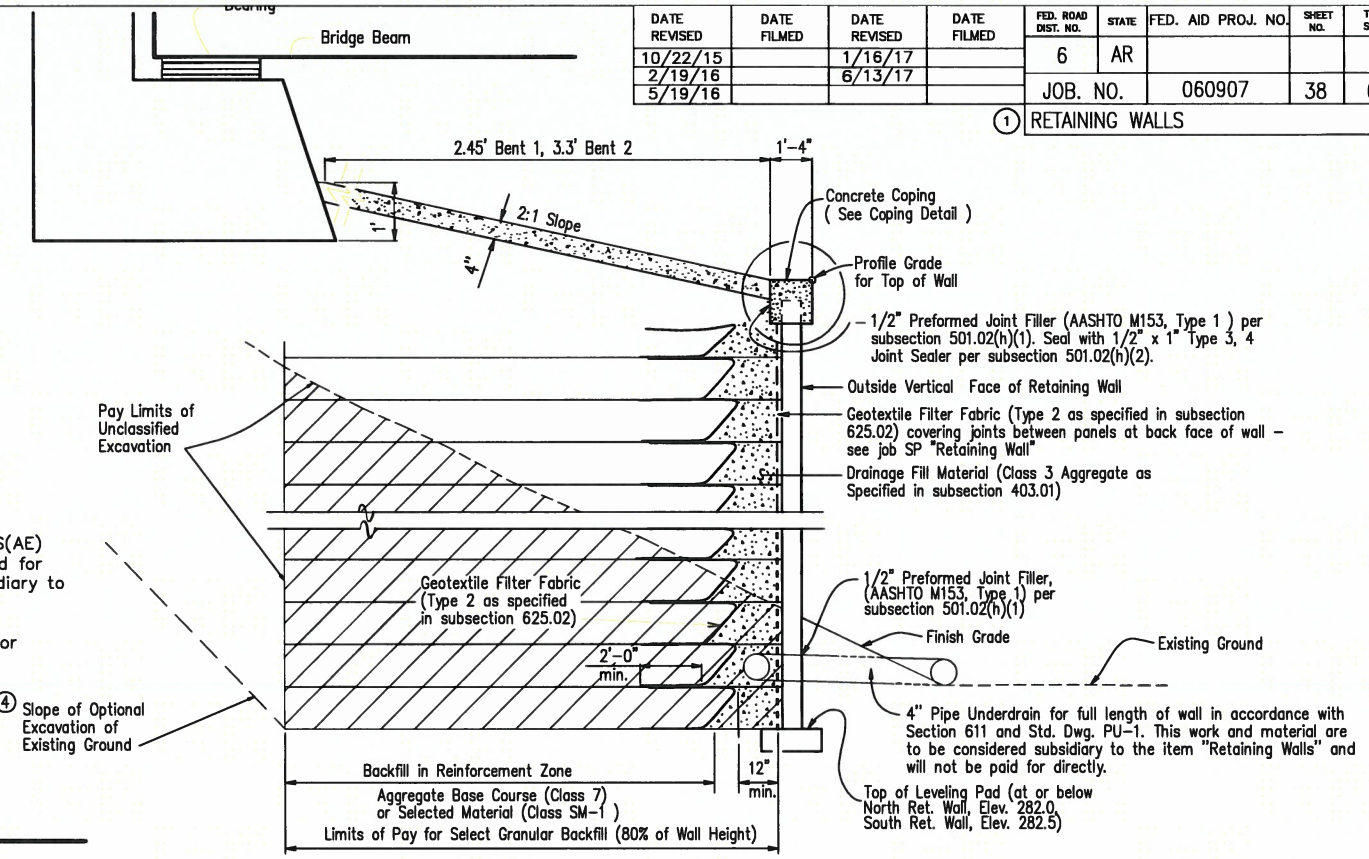

SECTION A-A
(BACKFILL METHOD A)
No Scale

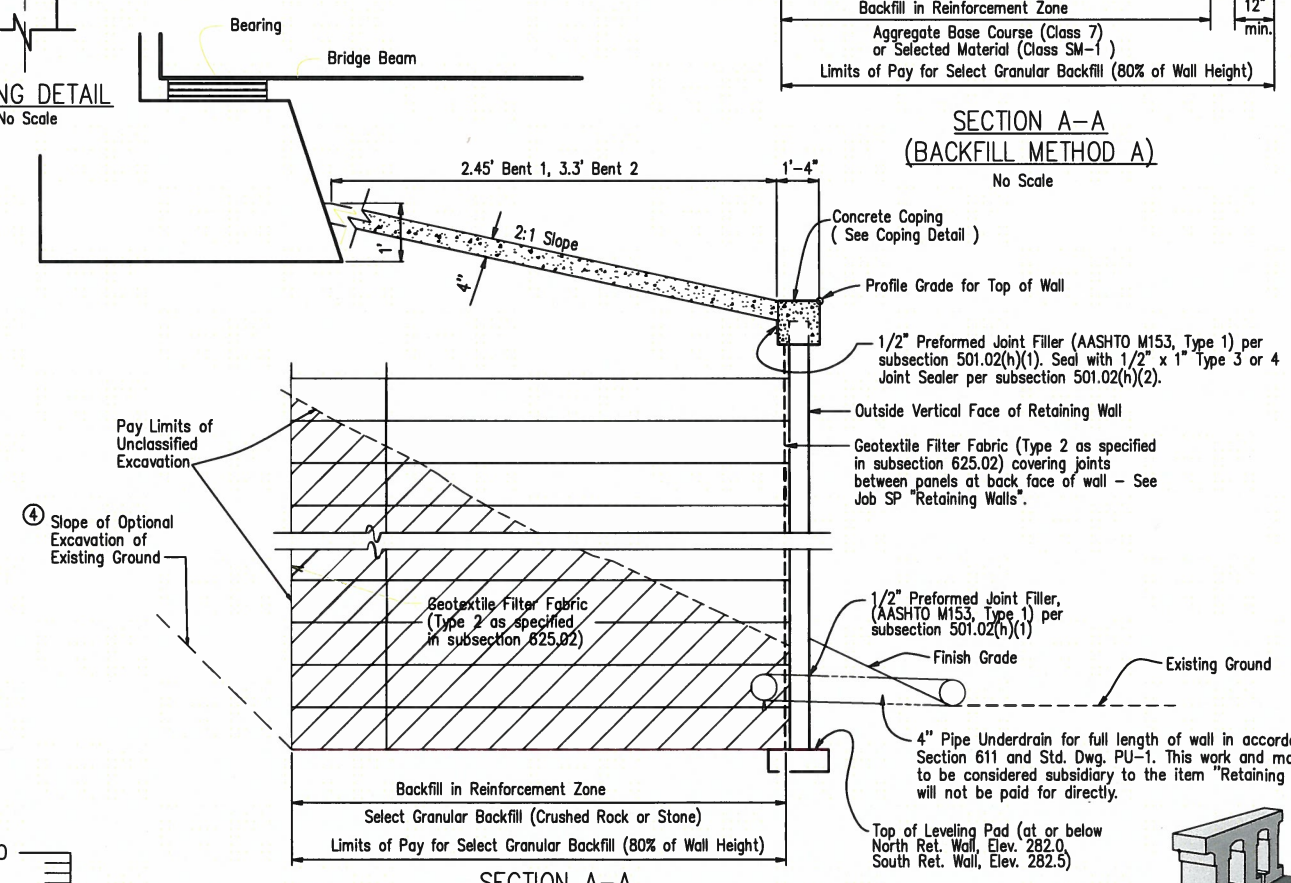

SECTION A-A
(BACKFILL METHOD B)
No Scale

MSE Wall Supplier shall Design & Furnish attachments for End Bent. This Work and Materials are to be considered Subsidiary to the item "RETAINING WALLS" and will not be paid for directly.

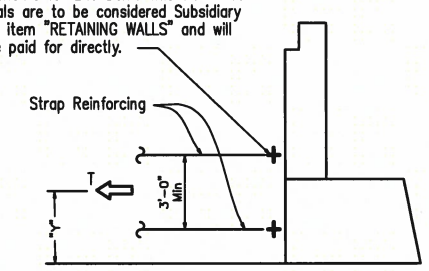

END BENT STRAP DETAIL

T = Resultant Force Required to be resisted by Strap Reinforcing

Y = Centroid of Strap Reinforcing

LIMIT STATE	T	Y
	Kips/Ft.	Ft.
Service	2.2	2.5
Strength	3.6	

GENERAL NOTES:

DESIGN SPECIFICATIONS: AASHTO LRFD BRIDGE DESIGN SPECIFICATIONS SIXTH EDITION (2012) WITH 2013 INTERIM REVISIONS.

A FACTORED BEARING RESISITANCE OF 8,000 PSF IS RECOMMENDED FOR THE EXISTING FOUNDATION MATERIAL BASED ON AN ESTIMATED WIDTH OF THE REINFORCING ZONE.

AN ASHLAR STONE FINISH OR APPROVED EQUAL WILL BE REQUIRED FOR THE WALL FACE.

RETAINING WALL STATIONS ARE MEASURED ALONG OUTSIDE VERTICAL FACE OF WALL. ELEVATIONS SHOWN ARE PROFILE GRADE FOR TOP OF WALL. WALL AND GROUND ELEVATIONS ARE APPROXIMATE. WALL DIMENSIONS MAY VARY DEPENDING ON WALL DESIGN SELECTED.

BORING LOGS MAY BE OBTAINED FROM THE CONSTRUCTION CONTRACT PROCUREMENT SECTION OF THE PROGRAM MANAGEMENT DIVISION UPON REQUEST.

REINFORCEMENT PLACEMENT AND DETAILS FOR RETAINING WALLS MAY BE AFFECTED BY END BENT CONSTRUCTION AND PROPOSED ROADWAY DRAINAGE STRUCTURES. SEE END BENT DRAWINGS FOR PILE LOCATIONS AND WINGWALL DETAILS. SEE ROADWAY PLANS FOR LOCATIONS AND DETAILS OF DRAINAGE STRUCTURES.

PIPE UNDERDRAINS SHALL BE USED IN THE AREA OF BACKFILL AS DETERMINED BY THE ENGINEER.

PREFORMED JOINT FILLER, JOINT SEALER, POLYSTYRENE BOARD AND PIPE UNDERDRAINS WILL NOT BE PAID FOR DIRECTLY BUT WILL BE CONSIDERED SUBSIDIARY TO THE "RETAINING WALL".

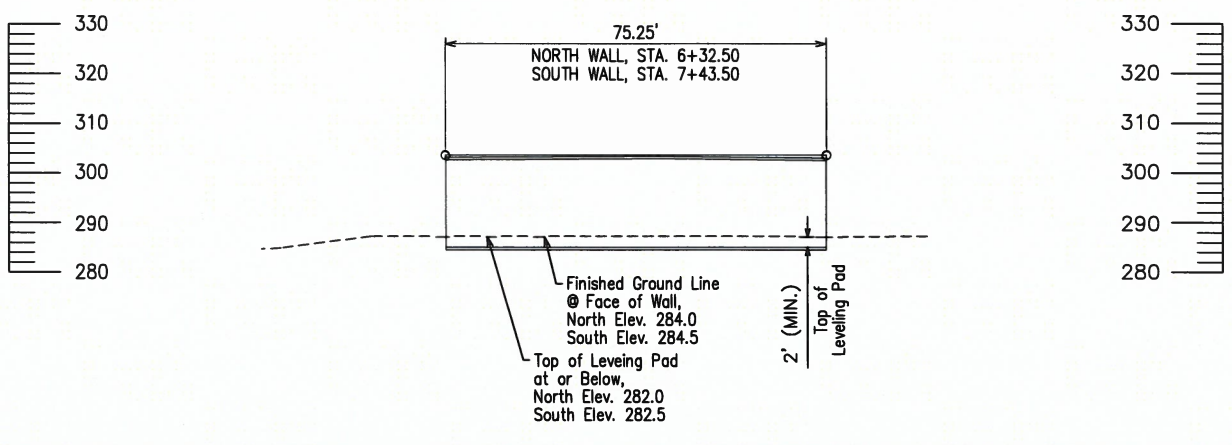

MEHLBURGER BRAWLEY
10 N. SHACKLEFORD PLAZA, SUITE 100
LITTLE ROCK, ARKANSAS 72211
(501) 375-5331 - FAX (501) 398-6481
CA # 2532 EXPIRES 12/31/17

STATE OF ARKANSAS ★★★ LICENSED PROFESSIONAL ENGINEER ★★★ No. 13365 Leon Dale Burke, Jr.

6/13/17

BRIDGE ENGINEER

LAYOUT OF RETAINING WALLS (BR4)

ROUTE SEC.

CITY OF LITTLE ROCK

LITTLE ROCK, ARK

DRAWN BY:	CDP	DATE:	10/22/15	FILENAME:	LAYOUT OF RETAINING WALLS
CHECKED BY:	DB	DATE:	10/22/15	SCALE:	1" = 20'
DESIGNED BY:	MB	DATE:	10/22/15		

BRIDGE NO. — DRAWING NO.

DATE REVISED	DATE FILMED	DATE REVISED	DATE FILMED	FED. ROAD DIST. NO.	STATE	FED. AID PROJ. NO.	SHEET NO.	TOTAL SHEETS
10/22/15		1/16/17		6	AR			
2/19/16		6/13/17		JOB. NO.		060907	39	67
5/19/16								

① END BENTS

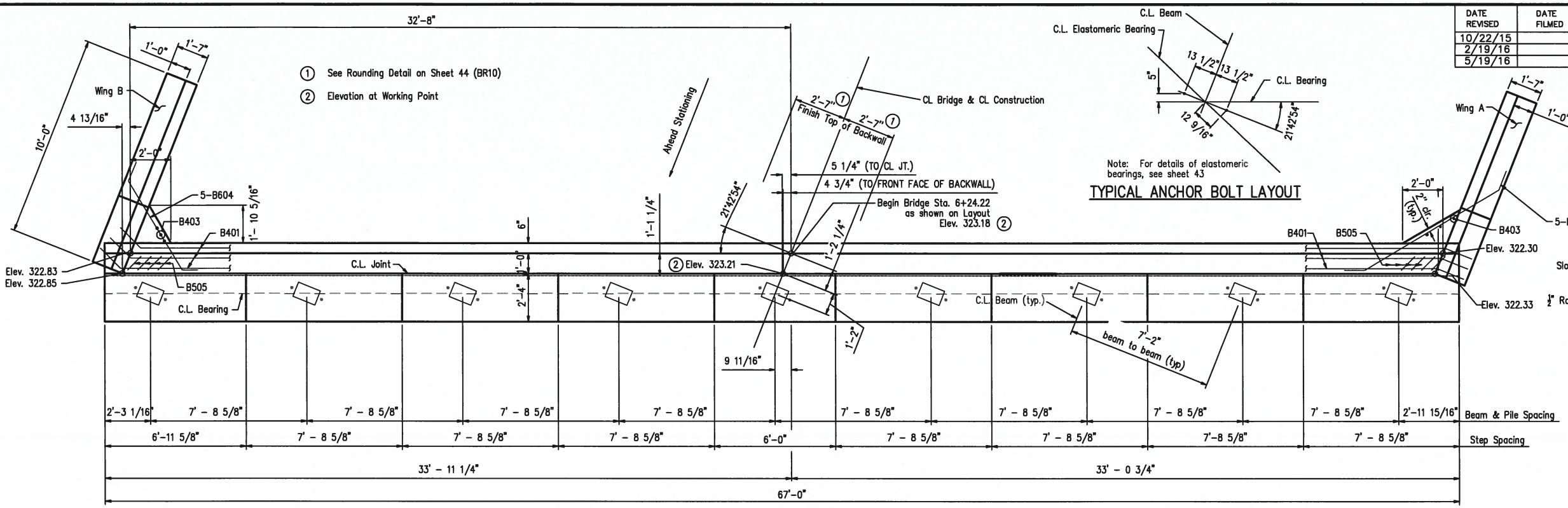

PLAN – BENT 1

1" = 6'

Note: For details of elastomeric bearings, see sheet 43

TYPICAL ANCHOR BOLT LAYOUT

Note: See sheet or details of elastomeric bearings, see sheet 43

See sheet 38 for details of end bent tie back straps.

Class I Protective Surface Treatment shall be applied to the top of backwall, sidewalk, roadway face and top of wing rail.

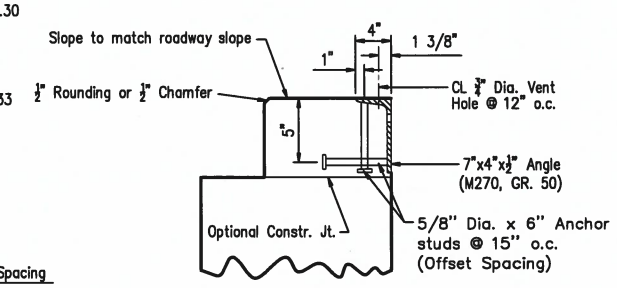

Notes: For additional joint details, see Dwg No. 49 (BR15).
Concrete shall be hand packed under the joint armor in the backwall.

DETAIL Z

N.T.S.

NOTE: The Backwall above the required construction joint shall not be poured until the beams are in place. Backwall may be placed prior to placing the adjacent concrete deck only if the optional backwall construction joint is used. See sheet 48, "Section thru Joint at End Bents" for additional information.

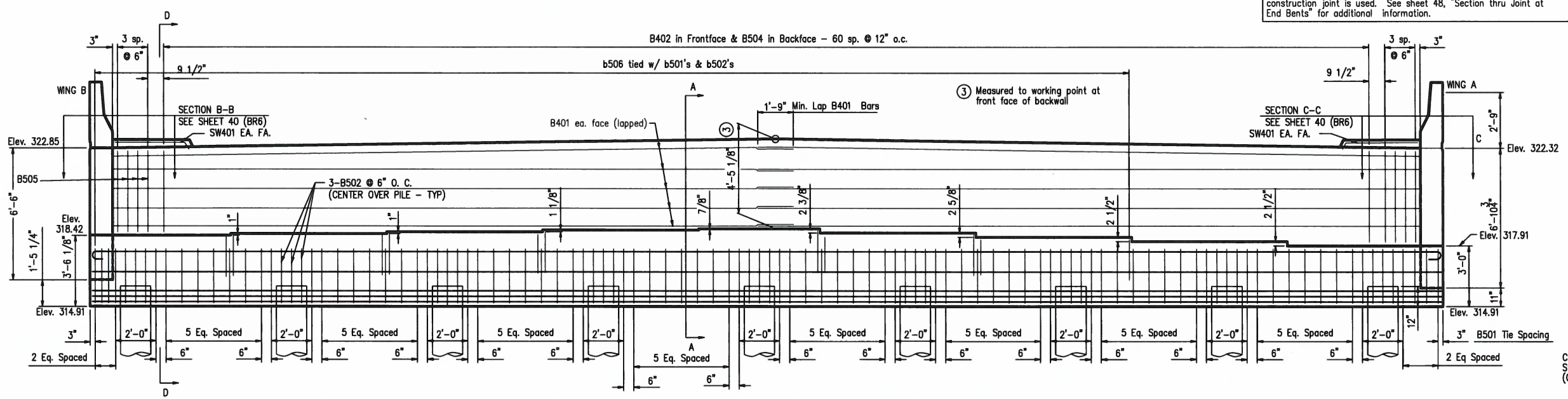

ELEVATION – BENT 1

Looking Ahead
1" = 6'

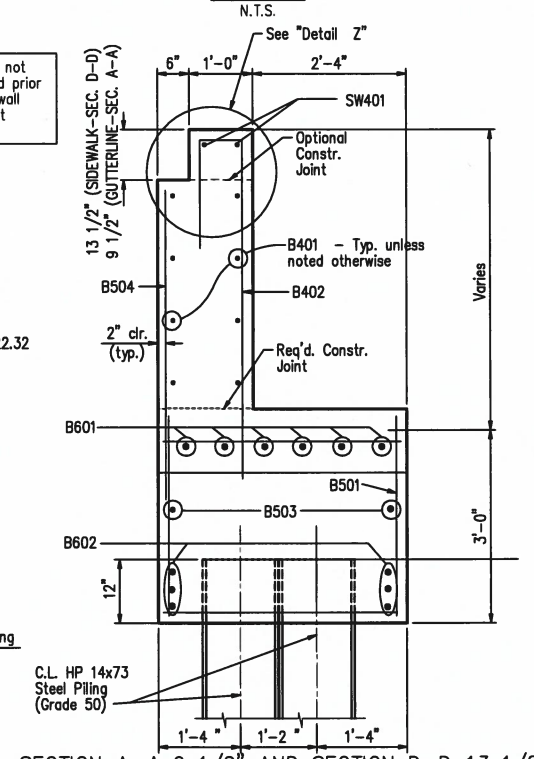

SECTION A–A 9 1/2" AND SECTION D–D 13 1/2"

1" = 3'

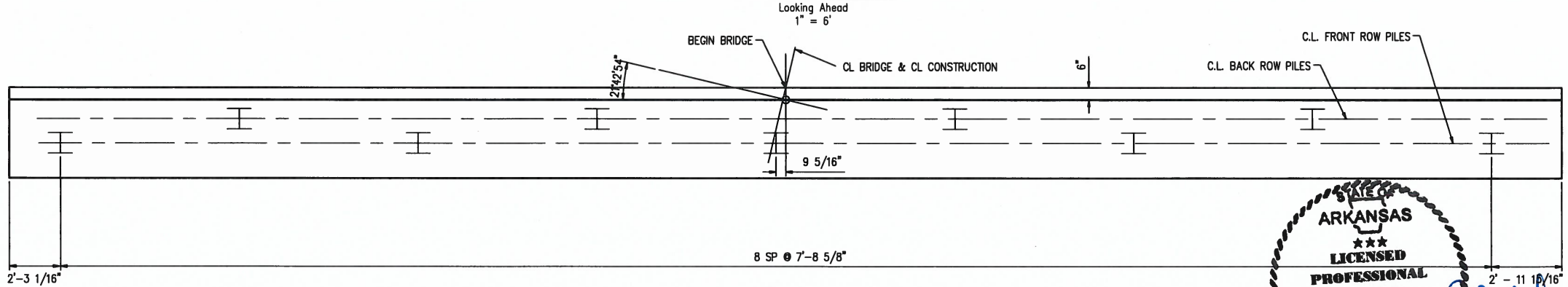

LAYOUT OF PILES

1" = 6'

MEHLBURGER BRAWLEY
10 N. SHACKLEFORD PLAZA, SUITE 100
LITTLE ROCK, ARKANSAS 72211
(501) 375-5331 - FAX (501) 398-6481
CA # 2532 EXPIRES 12/31/17

STATE OF ARKANSAS ★★★ LICENSED PROFESSIONAL ENGINEER ★★★ No. 13365 Leon Dale Burke, JR.

6/13/17
BRIDGE ENGINEER

SHEET 1 OF 3
DETAILS OF END BENTS (BR5)
ROUTE SEC.
CITY OF LITTLE ROCK
LITTLE ROCK, ARK

DRAWN BY: CDP DATE: 10/22/15
CHECKED BY: DB DATE: 10/22/15
DESIGNED BY: MB DATE: 10/22/15
FILENAME: END BENTS
SCALE: 1" = 6'
BRIDGE NO. – DRAWING NO.

DATE REVISED	DATE FILMED	DATE REVISED	DATE FILMED	FED. ROAD DIST. NO.	STATE	FED. AID PROJ. NO.	SHEET NO.	TOTAL SHEETS
10/22/15		1/16/17		6	AR			
2/19/16		6/13/17		JOB. NO.		060907	40	67
5/19/16								

(1) END BENTS

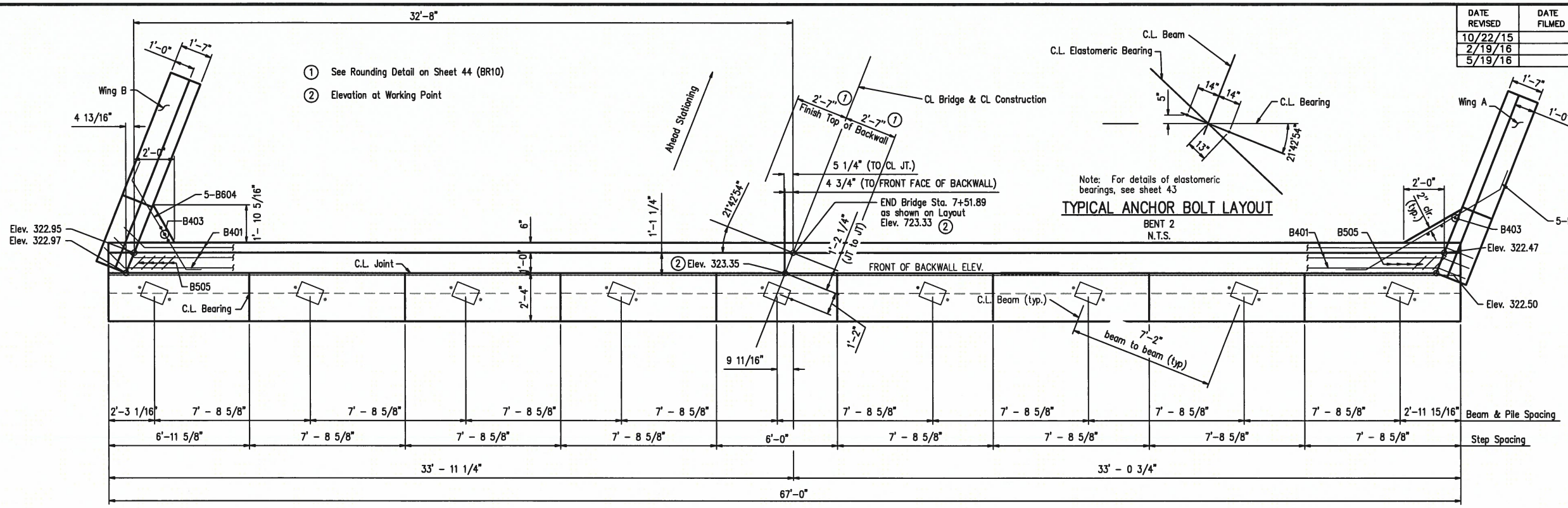

PLAN – BENT 2

1" = 6'

Note: For details of elastomeric bearings, see sheet 43

TYPICAL ANCHOR BOLT LAYOUT

BENT 2

N.T.S.

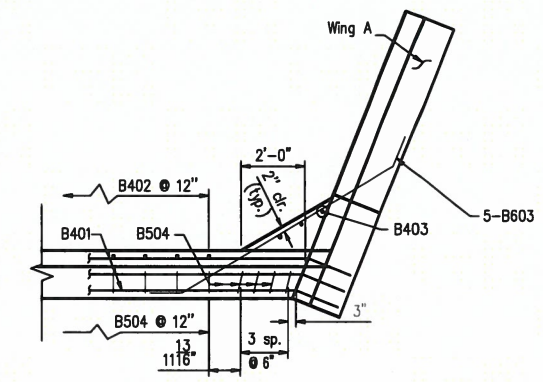

SECTION C–C

N.T.S.

NOTE: The Backwall above the required construction joint shall not be poured until the beams are in place. Backwall may be placed prior to placing the adjacent concrete deck only if the optional backwall construction joint is used. See sheet 48, "Section thru Joint at End Bents" for additional information.

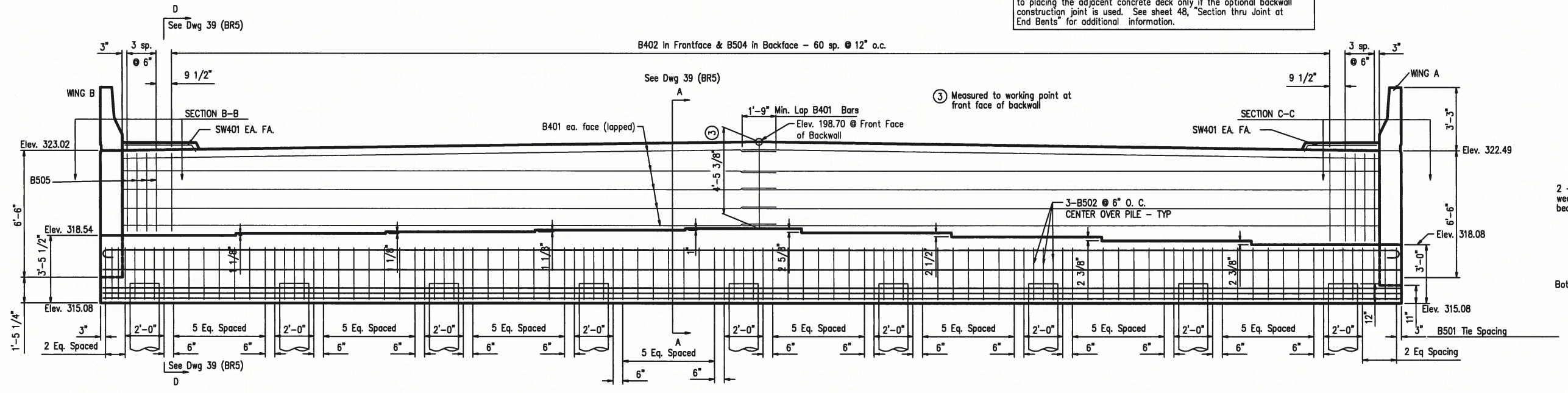

ELEVATION – BENT 2

Looking Ahead

1" = 6'

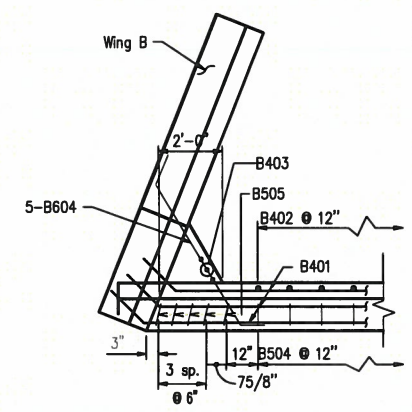

SECTION B–B

N.T.S.

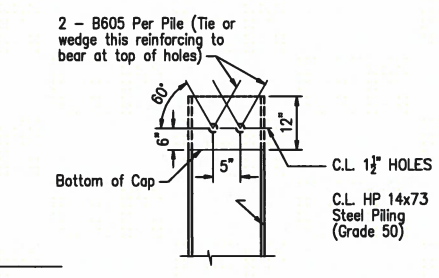

DETAIL AT PILE TOP

N.T.S.

GENERAL NOTES:

All concrete shall be Class "S" with a minimum of 28 day compressive strength f'c = 3500 psi. Concrete shall be poured in the dry and all exposed corners to be chamfered ¾" unless otherwise noted.

All reinforceing steel shall be Grade 60 (yield strength = 60,000 psi) conforming to AASHTO M 31 or M 322, Type A, with mill test reports.

Top reinforcing bars and pile anchorage in cap shall be properly placed to avoid interference with anchor bolts.

Structural steel in end bents shall be AASTO M 270, Grade 50W and shall be paid for as "Structural Steel in Beam Spans (M 270, Grade 50W).

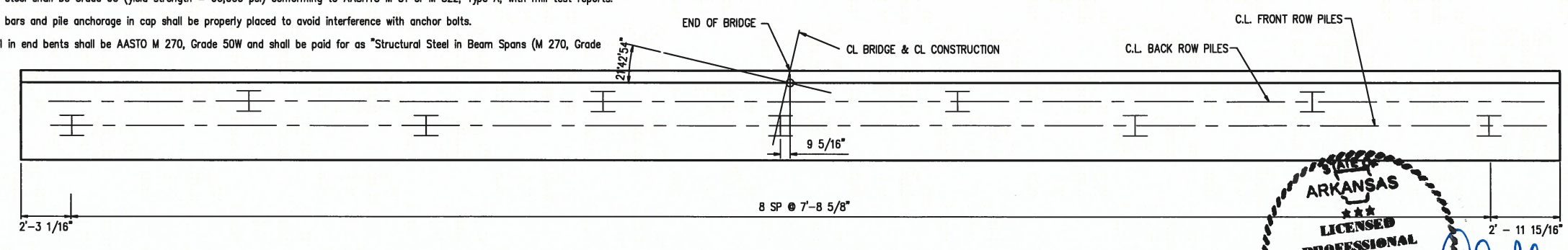

LAYOUT OF PILES

1" = 6'

MEHLBURGER BRAWLEY
10 N. SHACKLEFORD PLAZA, SUITE 100
LITTLE ROCK, ARKANSAS 72211
(501) 375-5331 - FAX (501) 398-6481
CA # 2532 EXPIRES 12/31/17

STATE OF ARKANSAS LICENSED PROFESSIONAL ENGINEER No. 13363 Leon Dale Burke

BRIDGE ENGINEER 6/13/17

SHEET 2 OF 3

DETAILS OF END BENTS (BR6)

ROUTE SEC.

CITY OF LITTLE ROCK

LITTLE ROCK, ARK

DRAWN BY: CDP DATE: 10/22/15 FILENAME: END BENTS

CHECKED BY: DB DATE: 10/22/15 SCALE: 1" = 6'

DESIGNED BY: MB DATE: 10/22/15

BRIDGE NO. – DRAWING NO.

DATE REVISED	DATE FILMED	DATE REVISED	DATE FILMED	FED. ROAD DIST. NO.	STATE	FED. AID PROJ. NO.	SHEET NO.	TOTAL SHEETS
10/22/15		1/16/17		6	AR			
2/19/16		6/13/17		JOB. NO.		060907	41	67
5/19/16								

1 END BENTS

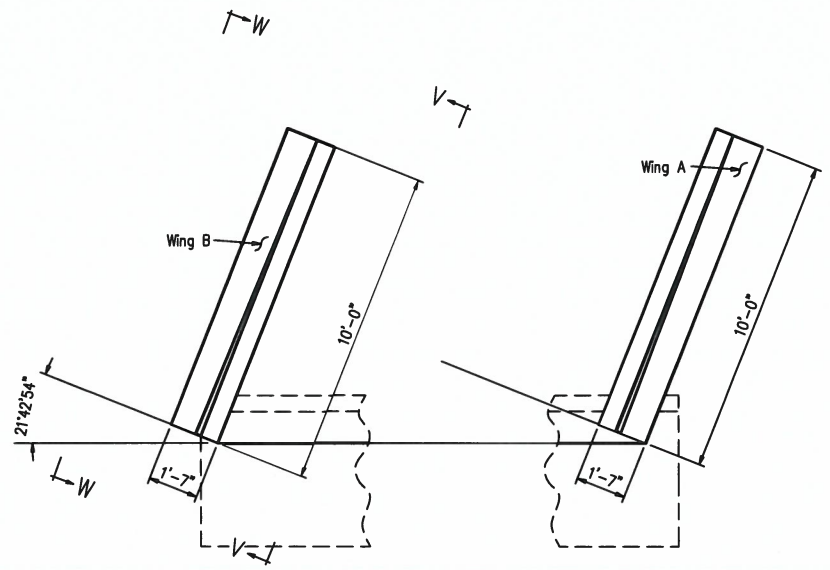

PLAN OF RAIL

1" = 6'

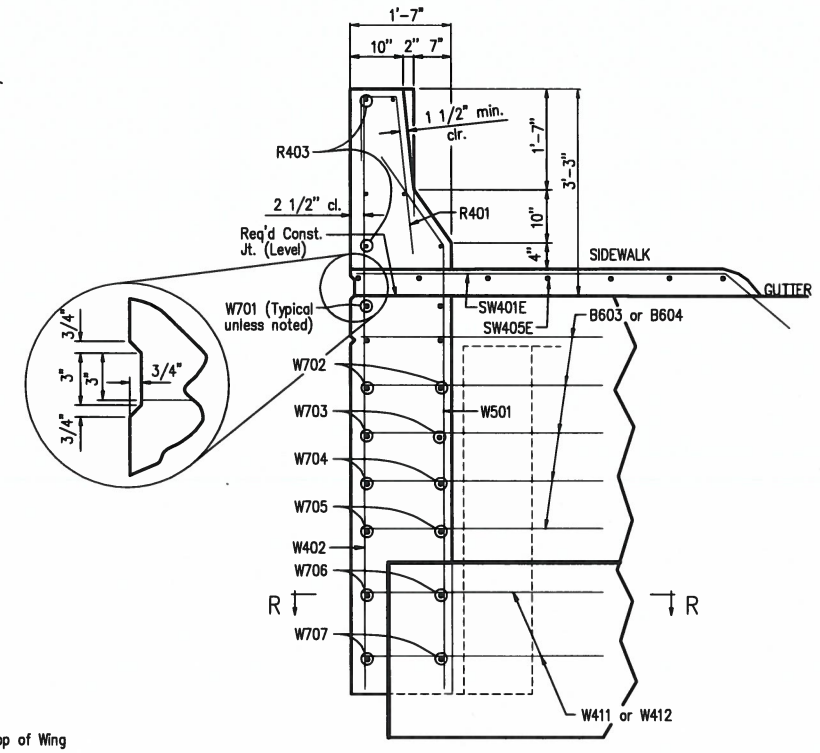

VIEW S-S

1" = 3'

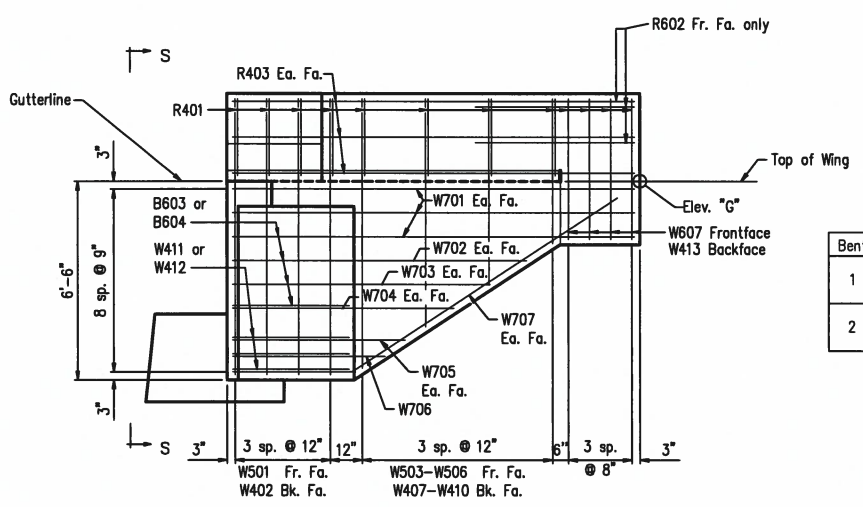

VIEW V-V

TABLE OF VARIABLES

Bent	Wing	ELEV. "G"	"H"	"J"
1	A	322.32	4'-6"	11"
	B	322.85	4'-6"	1'-5 1/4"
2	A	322.49	4'-6"	11"
	B	323.02	4'-6"	1'-5 1/4"

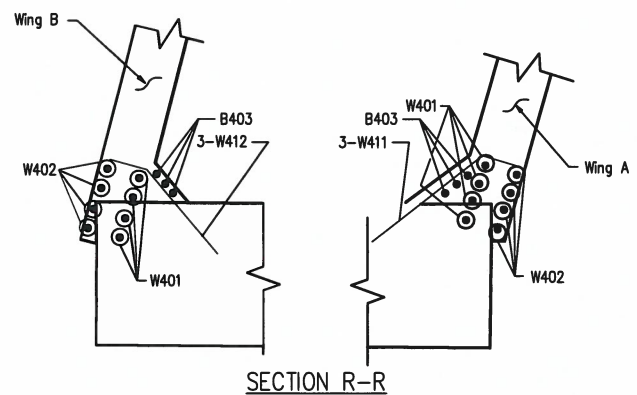

SECTION R-R

1" = 6'

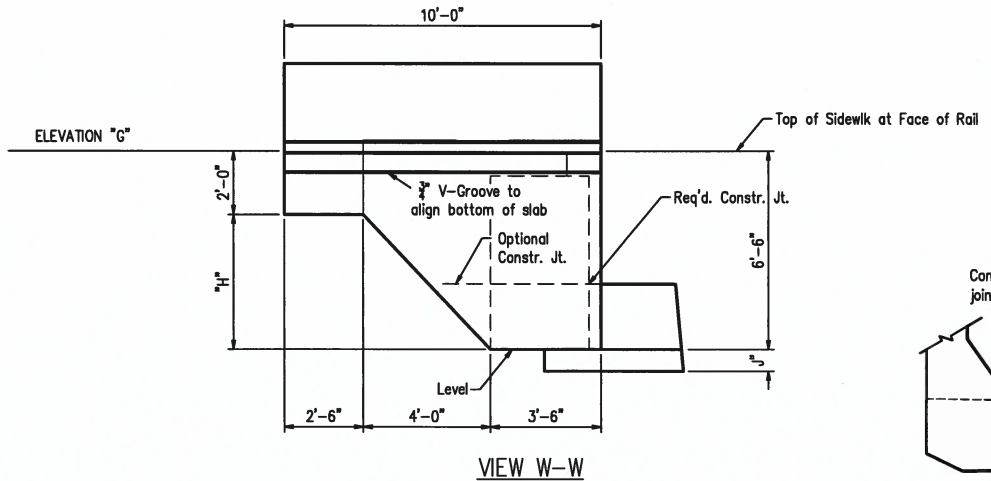

VIEW W-W

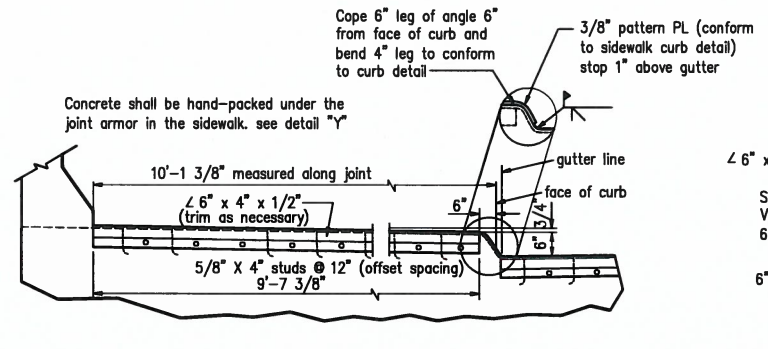

SIDEWALK DETAIL

NO SCALE

Concrete shall be hand-packed under the joint armor in the sidewalk. see detail "Y"

DETAIL "Y"

NO SCALE

BAR LIST - PER BENT

MARK	# REQ'D.	LENGTH	P.D.
B401	20	34'-7"	2"
B402	61	7'-6"	2"
B403	6	5'-4"	Str.
B501	54	13'-4 1/2"	2 1/2"
B502	27	8'-10 1/2"	2 1/2"
B503	4	34'-8 1/2"	Str.
B504	61	4'-10"	Str.
B505	8	11'-6"	2 1/2"
B506	82	7'-6 1/2"	2 1/2"
B601	12	35'-4 1/2"	4 1/2"
B602	12	34'-8 1/2"	Str.
B603	5	12'-11"	4 1/2"
B604	5	9'-0"	4 1/2"
B605	18	2'-10"	4 1/2"
R401	22	4'-1"	2"
R403	12	9'-8"	Str.
SW401E	20	9'-3"	2"
SW405E	14	9'-8"	Str.
W501	8	7'-8"	2 1/2"
W402	8	9'-5"	Str.
W503-W506	2 each	Var. 3'-11" to 7'-3"	2 1/2"
W607	8 each	3'-10"	4 1/2"
W407-W410	2 each	Var. 5'-1" to 8'-6"	Str.
W411	3	6'-6"	2"
W412	3	4'-11"	2"
W413	8	4'-11"	Str.
W701	12	9'-8"	Str.
W702	4	6'-8"	Str.
W703	4	6'-0"	Str.
W704	4	5'-4"	Str.
W705	4	4'-8"	Str.
W706	4	4'-0"	Str.
W707	4	11'-2"	5 1/4"

BENDING DIAGRAMS

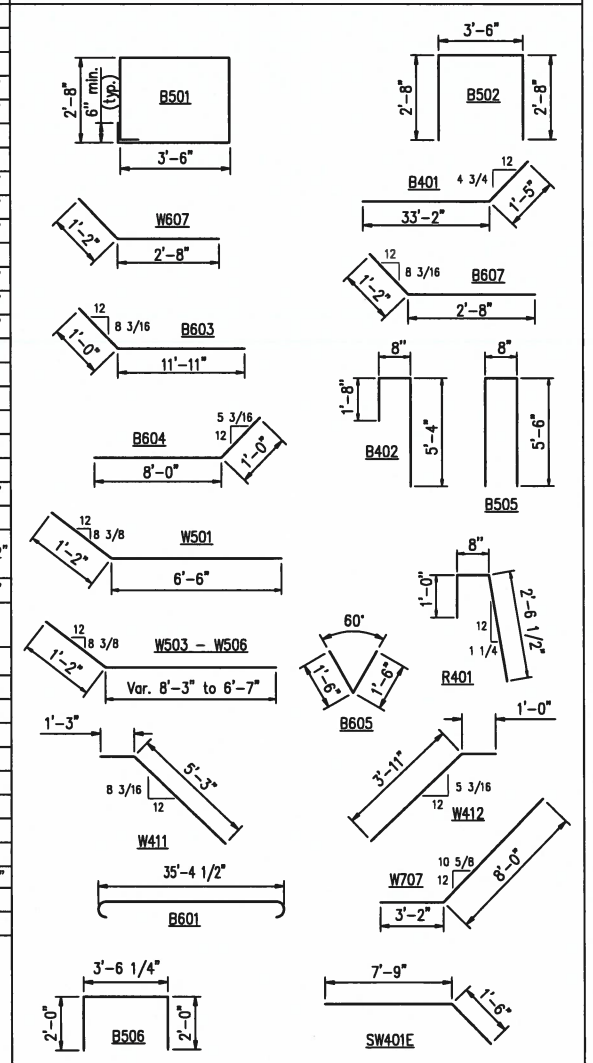

(Dimensions are out to out of bars)

NOTE: Bars with an "E" suffix are to be epoxy coated.

MEHLBURGER BRAWLEY
10 N. SHACKLEFORD PLAZA, SUITE 100
LITTLE ROCK, ARKANSAS 72211
(501) 375-5331 - FAX (501) 398-6481
CA # 2532 EXPIRES 12/31/17

STATE OF ARKANSAS
LICENSED PROFESSIONAL ENGINEER
No. 13365
Donald Burke Jr.
6/13/17
BRIDGE ENGINEER

SHEET 3 OF 3
DETAILS OF END BENTS (BR7)
ROUTE SEC.
CITY OF LITTLE ROCK
LITTLE ROCK, ARK

DRAWN BY: CDP DATE: 10/22/15
CHECKED BY: DB DATE: 10/22/15
DESIGNED BY: MB DATE: 10/22/15
FILENAME: END BENTS-SHT 3 OF 3
SCALE: NTS

BRIDGE NO. — DRAWING NO.

DATE REVISED	DATE FILMED	DATE REVISED	DATE FILMED	FED. ROAD DIST. NO.	STATE	FED. AID PROJ. NO.	SHEET NO.	TOTAL SHEETS
10/22/15		1/16/17		6	AR			
2/19/16		6/13/17		JOB. NO.		060907	42	67
5/19/16								

1 SIDEWALK DETAILS

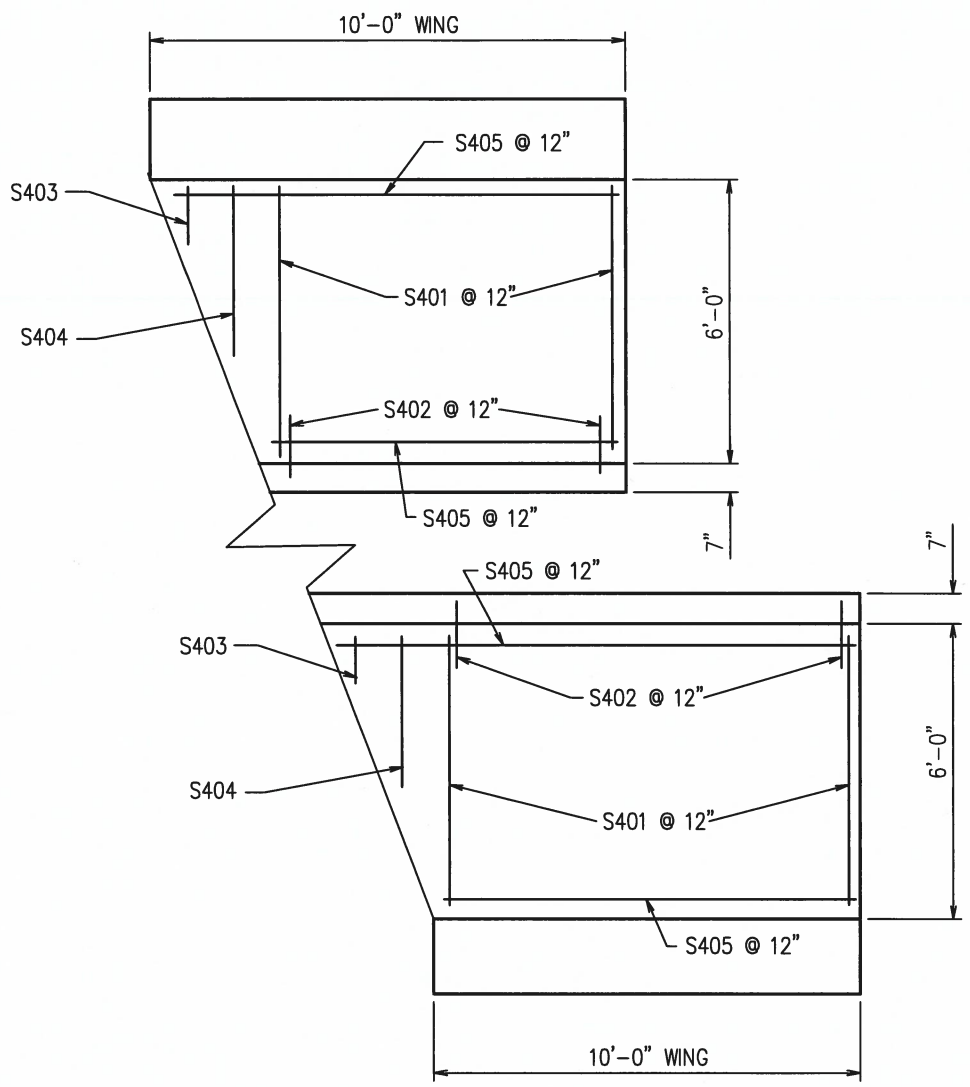

PLAN VIEW

SIDEWALK OVER WINGS REINFORCING

SCALE: NTS

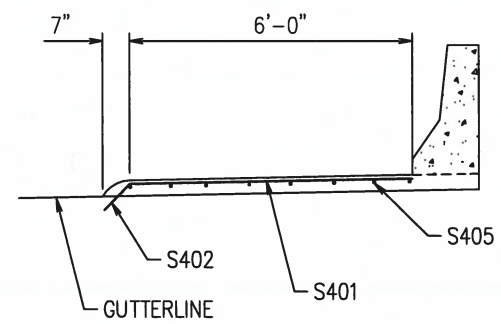

ELEVATION

BAR LIST – 4 WINGS

MARK	NO. REQ'D.	LENGTH	P.D.	BENDING DIAGRAMS
S401	32	5'-10"	STR	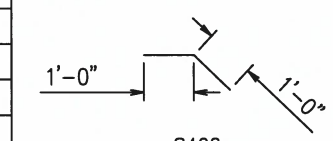 S402
S402	32	2'-6"	2"	
S403	4	2'-1"	Str.	
S404	4	4'-7"	STR	
S405	28	Var.	STR	

7'-3 5/16" to 9'-8" (N.W. & S.E. WINGS)
9'-8" to 12'-1" (N.E. & S.W. WINGS)

MEHLBURGER BRAWLEY
10 N. SHACKLEFORD PLAZA, SUITE 100
LITTLE ROCK, ARKANSAS 72211
(501) 375-5331 - FAX (501) 398-6481
CA # 2532 EXPIRES 12/31/17

STATE OF ARKANSAS ★★★ LICENSED PROFESSIONAL ENGINEER ★★★ No. 13365 Leon Dale Burke, JR.

6/13/17

BRIDGE ENGINEER

DETAILS (BR8)

ROUTE SEC.

CITY OF LITTLE ROCK

LITTLE ROCK, ARK

DRAWN BY: CDP DATE: 10/22/15 FILENAME: SIDEWALK DETAILS

CHECKED BY: DB DATE: 10/22/15 SCALE: NTS

DESIGNED BY: MB DATE: 10/22/15

BRIDGE NO. – DRAWING NO.

DATE REVISED	DATE FILMED	DATE REVISED	DATE FILMED	FED. ROAD DIST. NO.	STATE	FED. AID PROJ. NO.	SHEET NO.	TOTAL SHEETS
10/22/15		1/16/17		6	AR			
2/19/16		6/13/17		JOB. NO.		060907	43	67
5/19/16								

① ELASTOMERIC BEARINGS

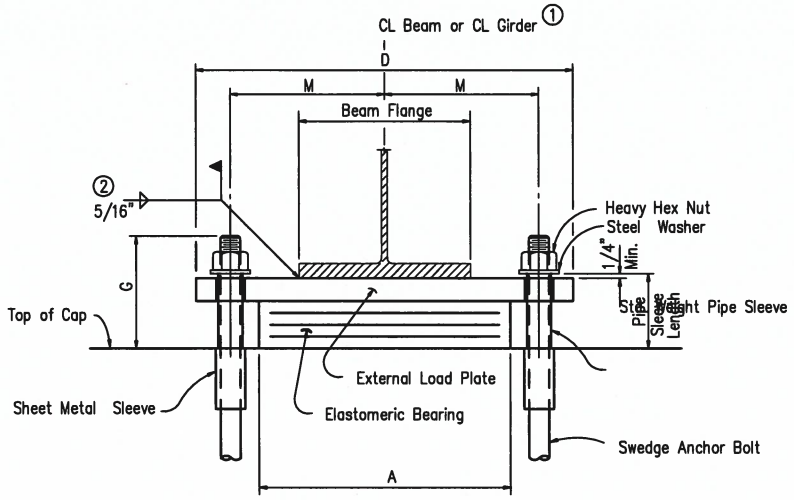

FRONT VIEW

① C.L. Elastomeric pad shall be aligned with C.L. Beam or Girder.

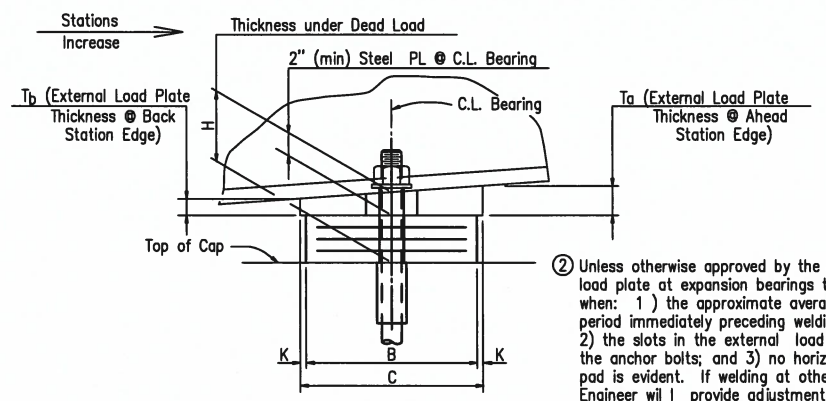

SIDE VIEW

Note: The direction of bevel of the external load plate may not be accurately depicted with respect to Ta and Tb values shown in Table of Fabricator Variables.

② Unless otherwise approved by the Engineer, welding of the external load plate at expansion bearings to the girder will be allowed only when: 1) the approximate average air temperature during the 24 hour period immediately preceding welding is between 40^ F and 80^ F; and 2) the slots in the external load plate are positioned to center on the anchor bolts; and 3) no horizontal deformation of the elastomeric pad is evident. If welding at other temperatures is required, the Engineer will provide adjustment data.

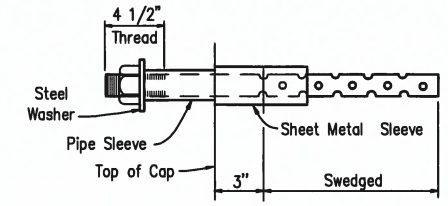

ANCHOR BOLT DETAIL

NOTE: Anchor Bolts may be cast in place or drilled and grouted into place. If Anchor Bolts are to be cast in place, the Galvanized Sheet Metal Sleeves will not be required.

If Anchor Bolts are to be drilled and grouted in place, the Galvanized Sheet Metal Sleeves shall be cast in place as shown. Sleeves shall be dry packed with styrofoam, urethane foam or approved equal prior to pouring of concrete. After pouring of the cap and prior to erection of Structural Steel, the dry pack shall be removed and holes for the anchor bolts shall be accurately drilled into the masonry. Bolts placed in drilled holes shall be accurately set and fixed using a QPL approved epoxy or non-shrink grout that completely fills the holes. Galvanized Sheet Metal Sleeves will not be paid for directly, but will be considered subsidiary to the item "Structural Steel in Beam Spans (M 270, Gr. 50W)".

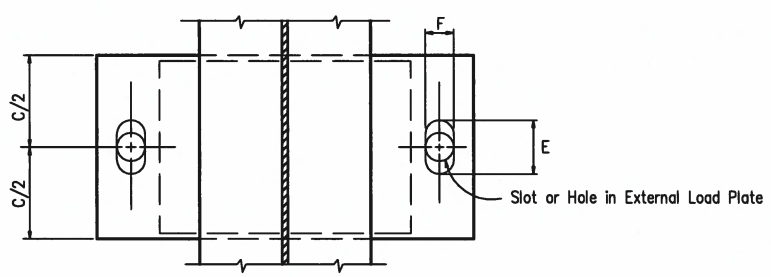

PLAN VIEW

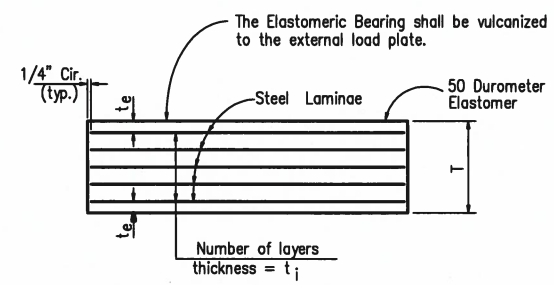

t_e = thickness of elastomer cover on top and bottom of pad

t_i = thickness of elastomer between steel laminae

N = number of elastomer layers of thickness t_i

ELASTOMERIC BEARING

GENERAL NOTES

Elastomeric Bearings shall conform to Section 808 and shall be paid for at the unit price bid for "Elastomeric Bearings".

External load plates shall conform to AASHTO M 270, Grade 50W. Pipe sleeves shall be ASTM A53, Grade B, and shall be galvanized to conform to AASHTO M 232, Class C or ASTM B695, Class 50.

External load plates shall be completely fabricated (including bevel and bolt holes) and shall be cleaned before vulcanizing to the elastomeric bearing. The surface in contact with the elastomeric bearing shall be cleaned in accordance with Subsection 808.03. Other surfaces shall be blast cleaned in accordance with Subsection 807.84(b) for painted steel and 807.84(e) for unpainted Grade 50W steel.

Anchor Bolts, Washers and Nuts shall conform to Subsection 807.07. The anchor bolt grade of steel shall be as specified in the "Table of Fabricator Variables". Indentations shall be circular with rounded bottoms and staggered as shown in the details.

Pipe Sleeves, Anchor Bolts, Washers and Nuts shall be paid for at the unit price bid for "Structural Steel in Beam Spans (M 270, Gr. 50W)". External load plates will not be measured and paid for seperately but will be considered incidental to the unit price bid for "Elastomeric Bearings".

Bearings shall be seated in accordance with Subsection 808.08. This work and materials are considered as subsidiary to the item "Elastomeric Bearings" and will not be paid for directly.

TABLE OF FABRICATOR VARIABLES

*Maximum Design Load = Service 1 Limit State

BRIDGE NO.	LOCATION: BENT NO(S).	LOCATION: BEAM OR GIRDER NO.	BEARING TYPE	NO. of BEARINGS EACH BENT	*MAXIMUM DESIGN LOAD (KIPS)	G	H	ELASTOMERIC PAD: A	B	N	t_i	t_e	NO. & THICKNESS OF STEEL LAMINAE	T	EXTERNAL LOAD PLATE: C	D	E	F	K	M	T_a	T_b	ANCHOR BOLT: ANCHOR BOLT (DIA. x L)	GRADE	PIPE SLEEVE SIZE (DIA. x L)	SHEET METAL SLEEVE SIZE (DIA. x L)	STEEL WASHER SIZE (O.D.)
XXXXX	1	All	Exp	9	180	7 1/8"	3 13/16"	19"	11"	2	1/2"	1/4"	3 @ 12 Ga.	1 13/16"	12"	31"	4 13/16"	3 1/8"	1/2"	13 1/2"	2.12"	1.88"	2"x29"	55	2 1/2" x 4 1/8"	4" x 8"	3 3/4"
	2	All	Fix	9	180	8 1/8"	3 13/16"	19"	11"	2	1/2"	1/4"	3 @ 12 Ga.	1 13/16"	12"	32 1/2"	4"	3 3/4"	1/2"	14"	1.89"	2.11"	2 3/4"x35"	55	3" x 4 1/8"	5" x 8"	5"

MEHLBURGER BRAWLEY
10 N. SHACKLEFORD PLAZA, SUITE 100
LITTLE ROCK, ARKANSAS 72211
(501) 375-5331 - FAX (501) 398-6481
CA # 2532 EXPIRES 12/31/17

STATE OF ARKANSAS
LICENSED PROFESSIONAL ENGINEER
No. 13383
Leon Dale Butler, Jr.
6/13/17
BRIDGE ENGINEER

DETAILS OF ELASTOMERIC BEARINGS (BR9)

ROUTE SEC.

CITY OF LITTLE ROCK

LITTLE ROCK, ARK

DRAWN BY: CDP DATE: 10/22/15
CHECKED BY: DB DATE: 10/22/15
DESIGNED BY: MB DATE: 10/22/15

FILENAME: ELASTOMERIC BEARINGS
SCALE: NTS

BRIDGE NO. — DRAWING NO.

DATE REVISED	DATE FILMED	DATE REVISED	DATE FILMED	FED. ROAD DIST. NO.	STATE	FED. AID PROJ. NO.	SHEET NO.	TOTAL SHEETS
10/22/15		1/16/17		6	AR			
2/19/16		6/13/17		JOB. NO.		060907	44	67
5/19/16								

(1) W-BEAM DETAILS

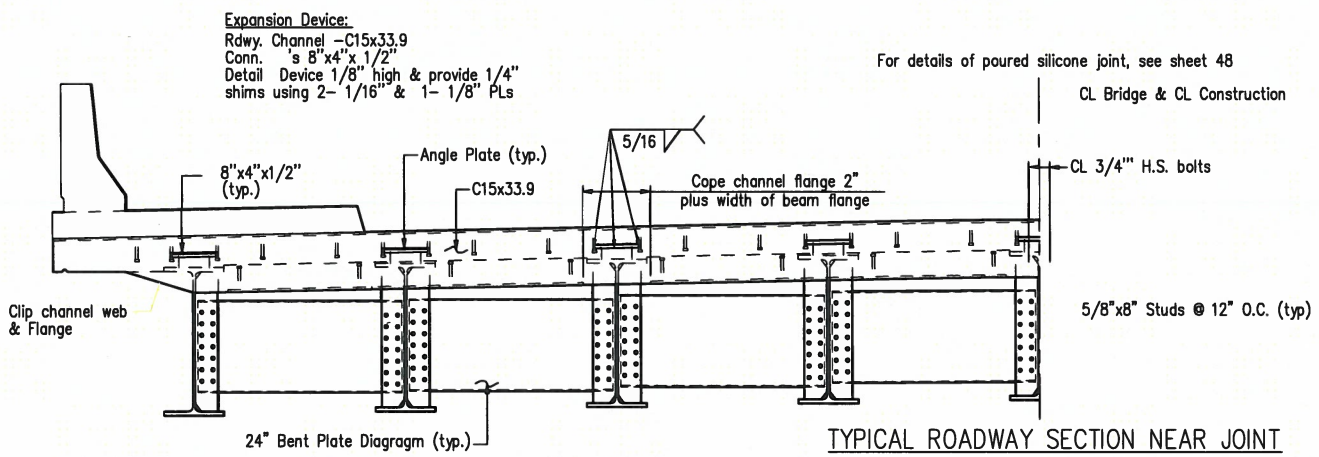

TYPICAL ROADWAY SECTION NEAR JOINT

See Curb Detail on sheet 13 for City of Little Rock Public Works standard detail PW-28 for Curb shape

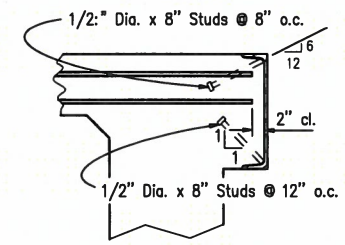

NOTE: As an alternate to 5/8"' studs, 1/2"' x 8" studs spaced as shown may be used. Use weight of 5/8" ' stud as basis of measurement of structural steel in anchors.

DETAILS OF ALTERNATE ANCHORS AND PLACEMENT OF LONGITUDINAL REINFORCEMENT

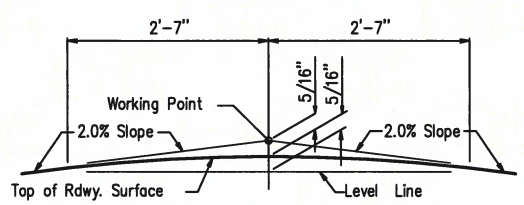

NOTE: Working Point matches Theoretical Roadway Grade.

ROUNDING DETAIL

No Scale

t_s = slab thickness as shown in "Typ. Roadway Section"

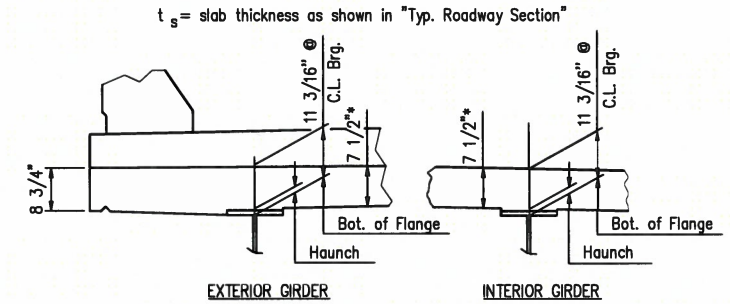

EXTERIOR GIRDER INTERIOR GIRDER

*Tolerance when removable deck forming is used is + 1/2", - 1/4". Haunch forming is required and shal l be adjusted to maintain slab thickness tolerance.

ADJUSTMENT FOR SLAB THICKNESS TOLERANCE

No Scale

NOTES:
Haunch dimension may vary within the fol lowing limits to maintain the grade and slab thickness tolerance: Minimum occurs when top flange contacts bottom reinforcing steel ; Maximum = top flange thickness plus 13/4". No increase in concrete and structural steel quantities wil l be made to maintain tolerances.

Tolerances shown are applicable only when removable deck forming is used. See Std. Dwg. No. 55005 for tolerances when permanent steel deck forms are used. Payment for concrete shall be based on removable deck forming.

MEHLBURGER BRAWLEY
10 N. SHACKLEFORD PLAZA, SUITE 100
LITTLE ROCK, ARKANSAS 72211
(501) 375-5331 - FAX (501) 398-6481
CA # 2532 EXPIRES 12/31/17

STATE OF ARKANSAS ★★★ LICENSED PROFESSIONAL ENGINEER ★★★ No. 10383 Leon Dale Burke, Jr.

6/13/17

BRIDGE ENGINEER

DETAILS OF W-BEAM DETAILS (BR10)

ROUTE SEC.

CITY OF LITTLE ROCK

LITTLE ROCK, ARK

DRAWN BY:	CDP	DATE:	10/22/15	FILENAME:	W-BEAM DETAILS
CHECKED BY:	DB	DATE:	10/22/15	SCALE:	NTS
DESIGNED BY:	MB	DATE:	10/22/15		

BRIDGE NO. — DRAWING NO.

DATE REVISED	DATE FILMED	DATE REVISED	DATE FILMED	FED. ROAD DIST. NO.	STATE	FED. AID PROJ. NO.	SHEET NO.	TOTAL SHEETS
10/22/15		1/16/17		6	AR			
2/19/16		6/13/17		JOB. NO.		060907	45	67
5/19/16								

(1) 125' W-BEAM SPAN

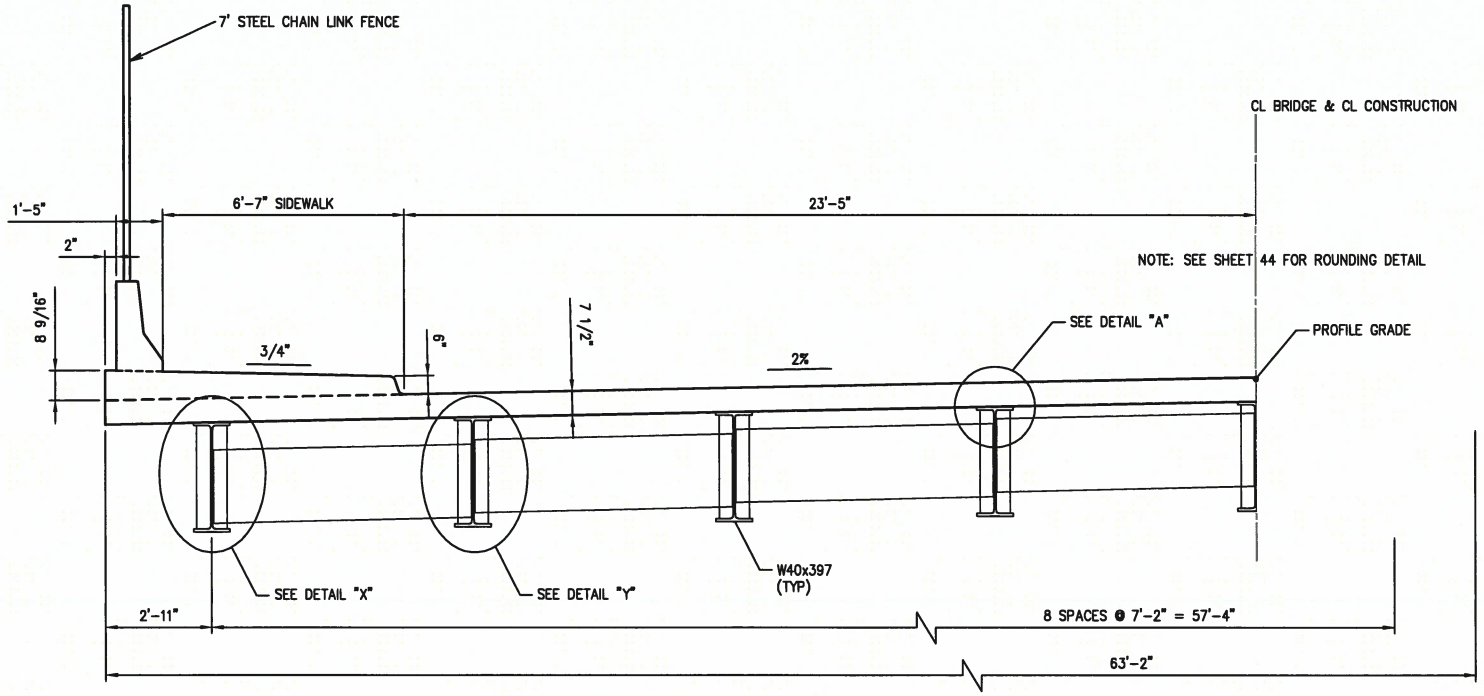

TYPICAL SECTION OF IMPROVEMENT
GEYER SPRINGS ROAD
BRIDGE SECTION (STA. 6+24.22 TO 7+51.89)

NOTE: Class 1 Protective Surface Treatment shall be applied to the roadway and sidewalk surface and the roadway face and top of the concrete parapet rail.

NOTE: At the Contractor's option, in lieu of providing bars S502E, one straight epoxy coated #5 bar top and bottom may be substituted for each bar. Payment for reinforcing will be based on the weight of bars S502E. Bars in top and bottom shall be epoxy coated.

Slab Reinforcing:

Longitudinal: S402E as shown (12" MAX. Spacing on top)

Transverse: S502E @ 12" o.c. bent up over beams
S501E @ 12" o.c. in top, S401 E @ 12" o.c. in bottom — Alternate
S503E @ 6" in top of overhangs (bundled with #5 bars)

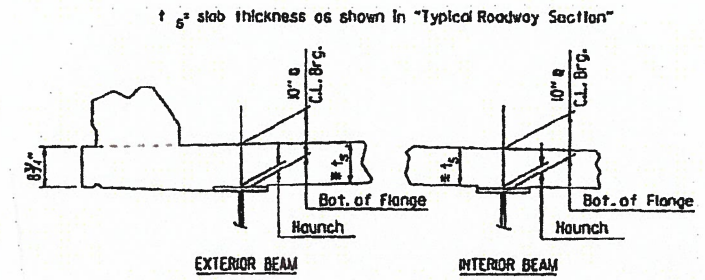

* Tolerance when removable deck forming is used is + ½", - ¼". Haunch forming is required and shall be adjusted to maintain slab thickness tolerance.

ADJUSTMENT FOR SLAB THICKNESS TOLERANCE
No Scale

NOTES:
Haunch dimension may vary within the following limits to maintain the grade and slab thickness tolerance: Minimum occurs when top flange contacts bottom reinforcing steel; Maximum = top flange thickness plus 1¾". No increase in concrete and structural steel quantities will be made to maintain tolerances.

Tolerances shown are applicable only when removable deck forming is used. See Std. Drg. No. 55005 for tolerances when permanent steel deck forms are used. Payment for concrete shall be based on removable deck forming.

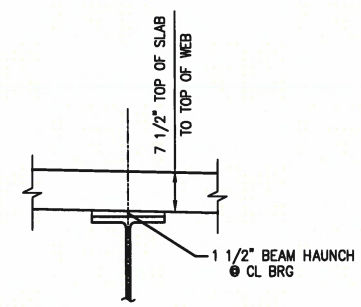

DETAIL "A"
NO SCALE

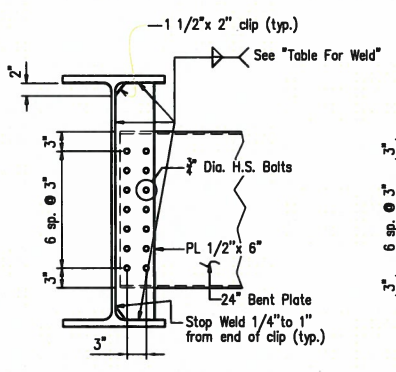

DETAIL X
NTS

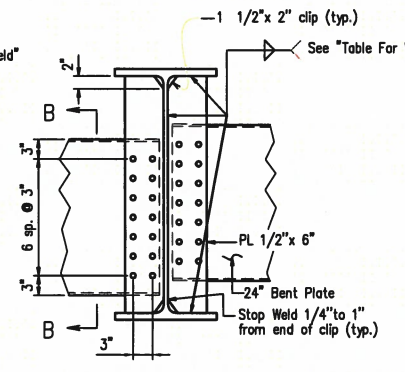

DETAIL Y
NTS

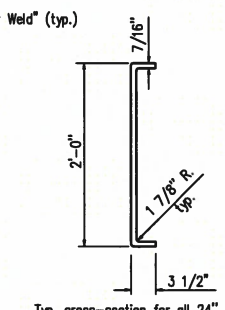

Typ. cross-section for all 24" bent plate diaphragms.

SECTION B-B
NTS

TABLE FOR WELD

Material Thickness of Thicker Part Joined (Inches)	Minimum Size of Fillet Weld (Inches)	Single Pass Weld Must Be Used
To 3/4" Inclusive	1/4"	
Over 3/4"	5/16"	

NOTE: When a fillet weld size, as shown on the plans, is larger than the minimum, the first pass shall be that specified for minimum size of fillet weld.

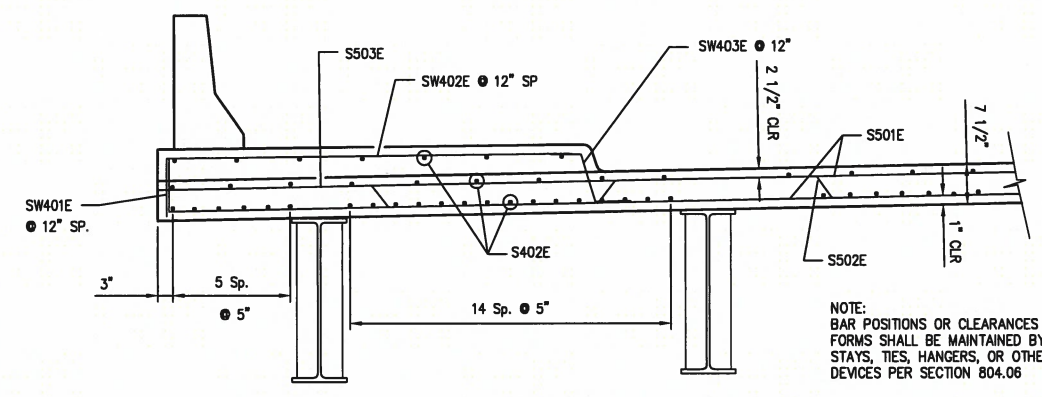

NOTE:
BAR POSITIONS OR CLEARANCES FROM THE FORMS SHALL BE MAINTAINED BY MEANS OF STAYS, TIES, HANGERS, OR OTHER APPROVED DEVICES PER SECTION 804.06

SIDEWALK AND SLAB REINFORCEMENT
NO SCALE

NOTE:
AT HIS OPTION, THE CONTRACTOR MAY SUBSTITUTE THE W-BEAM SHOWN WITH A WELDED PLATE GIRDER WHOSE DIMENSIONS, PLATE SIZES AND GRADE DUPLICATE THE DIMENSIONS, FLANGE THICKNESS, WEB THICKNESS AND GRADE OF THE SPECIFIED W-BEAM. THE WELD SIZES SHALL BE THAT SHOWN IN THE WELD TABLE. ALL WORK AND MATERIALS WILL BE PAID FOR AT THE UNIT PRICE BID FOR THE PAY ITEM "STRUCTURAL STEEL IN BEAM SPANS (M270-GRADE 50W).

ALL GIRDER WEBS AND FLANGE PLATES ARE CONSIDERED MAIN LOAD CARRYING MEMBERS AND SHALL MEET THE LONGITUDINAL CHARPY V-NOTCH TEST SPECIFIED IN SUBSECTION 807.05. THE WORK AND MATERIAL WILL NOT BE PAID FOR DIRECTLY BUT WILL BE CONSIDERED SUBSIDERED TO THE PAY ITEM "STRUCTURAL STEEL IN BEAM SPANS (M270-GRADE 50W)".

WEB AND FLANGE PLATES FOR MAIN MEMBERS SHALL BE CUT AND FABRICATED SO THAT THE PRIMARY DIRECTION OF ROLLING IS PARALLEL TO THE DIRECTION OF THE MAIN TENSILE AND/OR COMPRESSIVE STRESSES.

GIRDER WEBS MAY BE MADE BY SHOP SLICING WITH MINIMUM LENGTHS OF 25 FEET FOR SECTIONS. FLANGE PLATES MAY BE MADE BY SHOP SLICING WITH MINIMUM LENGTHS OF 25 FEET FOR SECTIONS. NO ADDITIONAL PAYMENT WILL BE MADE FOR SHOP WELDED SPLICES.

GROOVE WELDS IN WEB AND FLANGE PLATES SHALL BE QUALITY CONTROL (Q.C.) TESTED BY NONDESTRUCTIVE TESTING AS REQUIRED IN SUBSECTION 807.23(b). FILLET WELDS OF FLANGE TO WEB CONNECTIONS SHALL BE Q.C. TESTED BY THE MAGNETIC PARTICLE METHOD. ALL Q.C. TESTING SHALL BE CONSIDERED SUBSIDIARY TO THE PAY ITEM "STRUCTURAL STEEL IN BEAM SPANS (M270-GRADE 50W)".

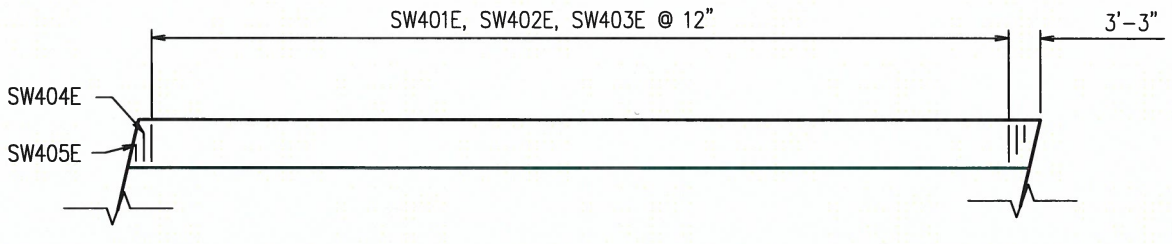

SIDEWALK OVER BRIDGE REINFORCING
SCALE: NTS

*SEE BAR LIST ON SHEET 40 (BR6)

MEHLBURGER BRAWLEY
10 N. SHACKLEFORD PLAZA, SUITE 100
LITTLE ROCK, ARKANSAS 72211
(501) 375-5331 - FAX (501) 398-6481
CA # 2532 EXPIRES 12/31/17

STATE OF ARKANSAS ★★★ LICENSED PROFESSIONAL ENGINEER ★★★ No. 13363 Leon Dale Burke, JR.

6/13/17
BRIDGE ENGINEER

SHEET 1 OF 5
DETAILS OF 125' W-BEAM SPAN (BR11)
ROUTE SEC.
CITY OF LITTLE ROCK
LITTLE ROCK, ARK

DRAWN BY: CDP DATE: 10/22/15
CHECKED BY: DB DATE: 10/22/15
DESIGNED BY: MB DATE: 10/22/15
FILENAME: 125' W-BEAM SHT 1 OF 5
SCALE: NTS
BRIDGE NO. — DRAWING NO.

DATE REVISED	DATE FILMED	DATE REVISED	DATE FILMED	FED. ROAD DIST. NO.	STATE	FED. AID PROJ. NO.	SHEET NO.	TOTAL SHEETS
10/22/15		1/16/17		6	AR			
2/19/16		6/13/17		JOB. NO.		060907	46	67
5/19/16								

(1) 125' W-BEAM SPAN

(P) Partial depth parapet joint at this location

* Placed as shown in "Typical Roadway Section," see Dwg. No. 36

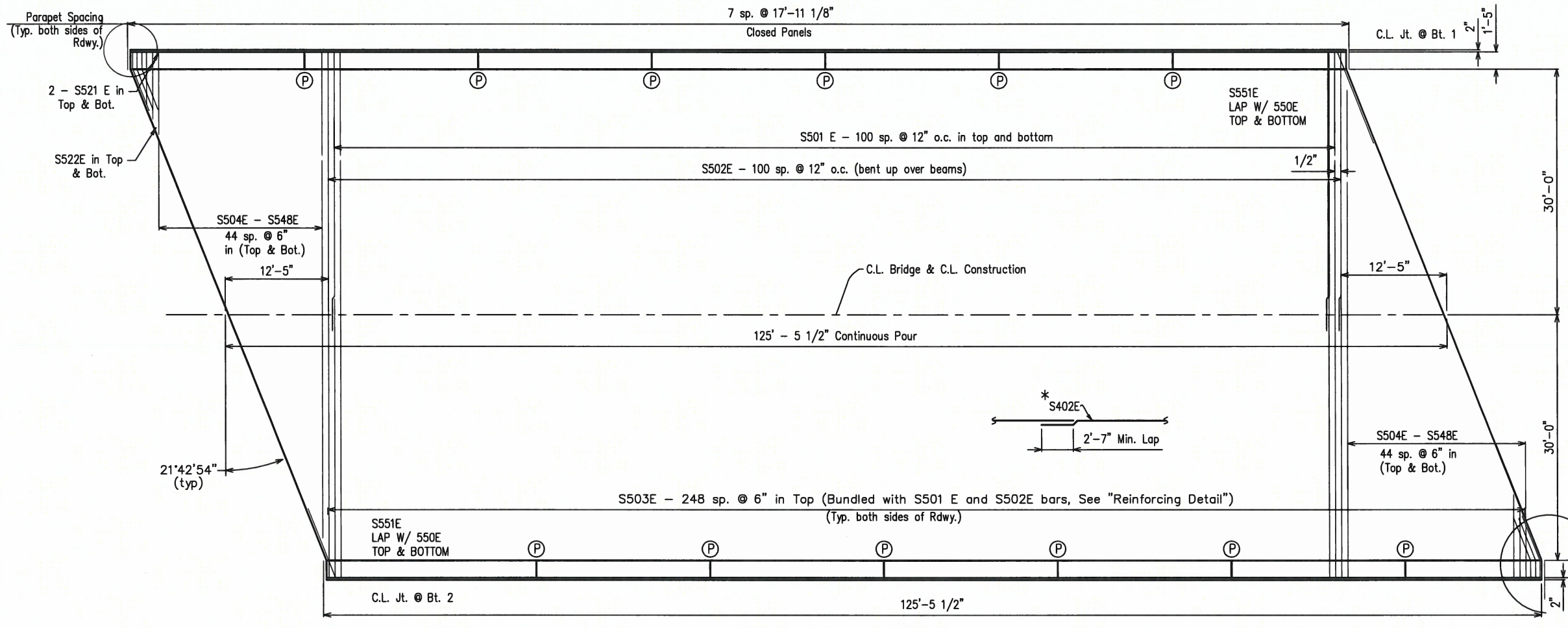

REINFORCING PLAN

3/16" = 1 '-0"

NOTES:

Pouring sequence joints shall align with open joints in parapet rail at the gutterline.

Spacing shown is measured along C.L. Bridge.

See Dwg. No. 48 for parapet reinforcing details.

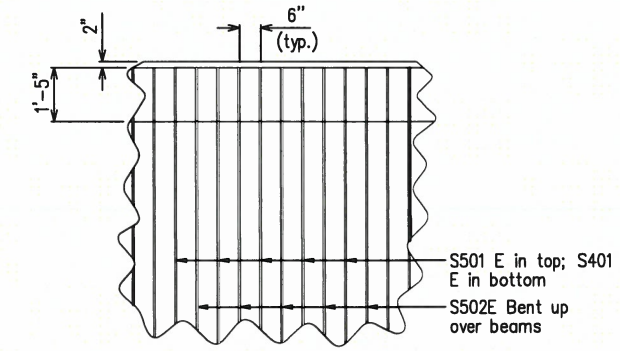

REINFORCING DETAIL

N.T.S.

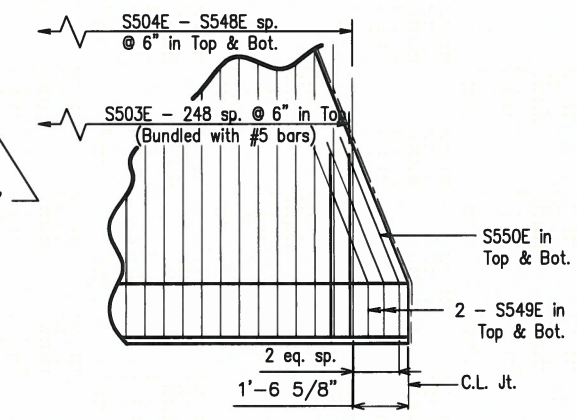

DETAIL A

3/8" = 1'-0"

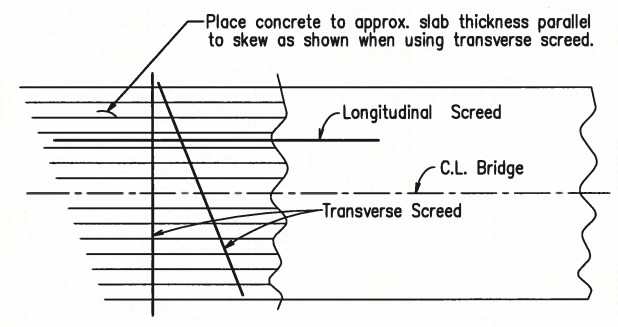

Note: At the Contractor's option, the transverse screed may be placed parallel to the skew or perpendicular to C. L. Bridge.

CONCRETE PLACEMENT PROCEDURE

NTS

POURING SEQUENCE NOTES:

Any railing pours made before the entire sidewalk has been placed must be approved by the Engineer. 72 hours shall elapse between the completion of the slab pouring and the pouring of the sidewalks. 72 hours shall elapse between completion of the sidewalk pour and the pouring of the concrete rail. The Contractor must obtain approval from the Engineer for any deviations from the pouring sequence shown. Concrete in bridge superstructure shall be consolidated for the entire pour before any concrete has taken its initial set. This may require the use of a retarding agent.

BAR LIST

Mark	No. Req'd.	Length	Pin Dia.
S402E	630	43'-4"	Str.
S501E	202	62'-10"	Str.
S502E	202	34'-4"	3"
S503E	496	6'-0"	Str.
S504E - S548E	4 ea.	5'-4" to 60'-0"	Str.
S549E	8	4'-1 1"	3 3/4"
S550E	4	60'-0"	3 3/4"
S551E	4	10'-0"	Str.
P401E	508	5'-6"	2"
P402E	98	17'-7 1/8"	Str.
P403E	48	5'-7"	Str.
P501E	508	6'-0"	3 3/4"
SW401E	250	1'-11"	2"
SW402E	250	7'-9"	2"
SW403E	250	3'-1 1/2"	2"
SW404E	4	6'-0"	Str.
SW405E	4	3'-5"	Str.

Bending Diagrams
(Dimensions are out to out of bars.)

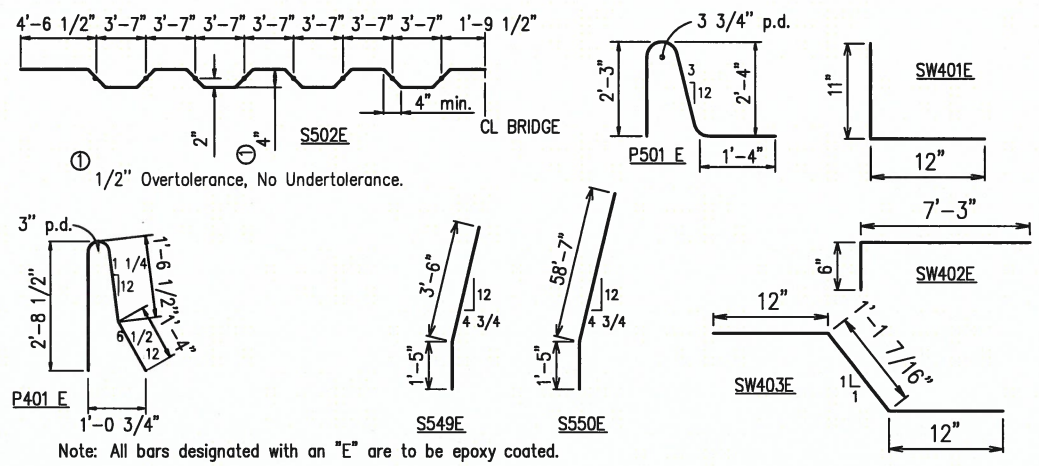

Note: All bars designated with an "E" are to be epoxy coated.

MEHLBURGER BRAWLEY
10 N. SHACKLEFORD PLAZA, SUITE 100
LITTLE ROCK, ARKANSAS 72211
(501) 375-5331 - FAX (501) 398-6481
CA # 2532 EXPIRES 12/31/17

STATE OF ARKANSAS
LICENSED PROFESSIONAL ENGINEER
No. 13365
Leon Dale Burke, JR.
6/13/17
BRIDGE ENGINEER

SHEET 2 OF 5
DETAILS OF 125' W-BEAM SPAN (BR12)
ROUTE SEC.
CITY OF LITTLE ROCK
LITTLE ROCK, ARK

DRAWN BY: CDP DATE: 10/22/15
CHECKED BY: DB DATE: 10/22/15
DESIGNED BY: MB DATE: 10/22/15
FILENAME: 125' W-BEAM SHT 2 OF 5
SCALE: 3/16" = 1'-0"

BRIDGE NO. — DRAWING NO.

DATE REVISED	DATE FILMED	DATE REVISED	DATE FILMED	FED. ROAD DIST. NO.	STATE	FED. AID PROJ. NO.	SHEET NO.	TOTAL SHEETS
10/22/15		1/16/17		6	AR			
2/19/16		6/13/17		JOB. NO.		060907	47	67
5/19/16								

(1) 125' W-BEAM SPAN

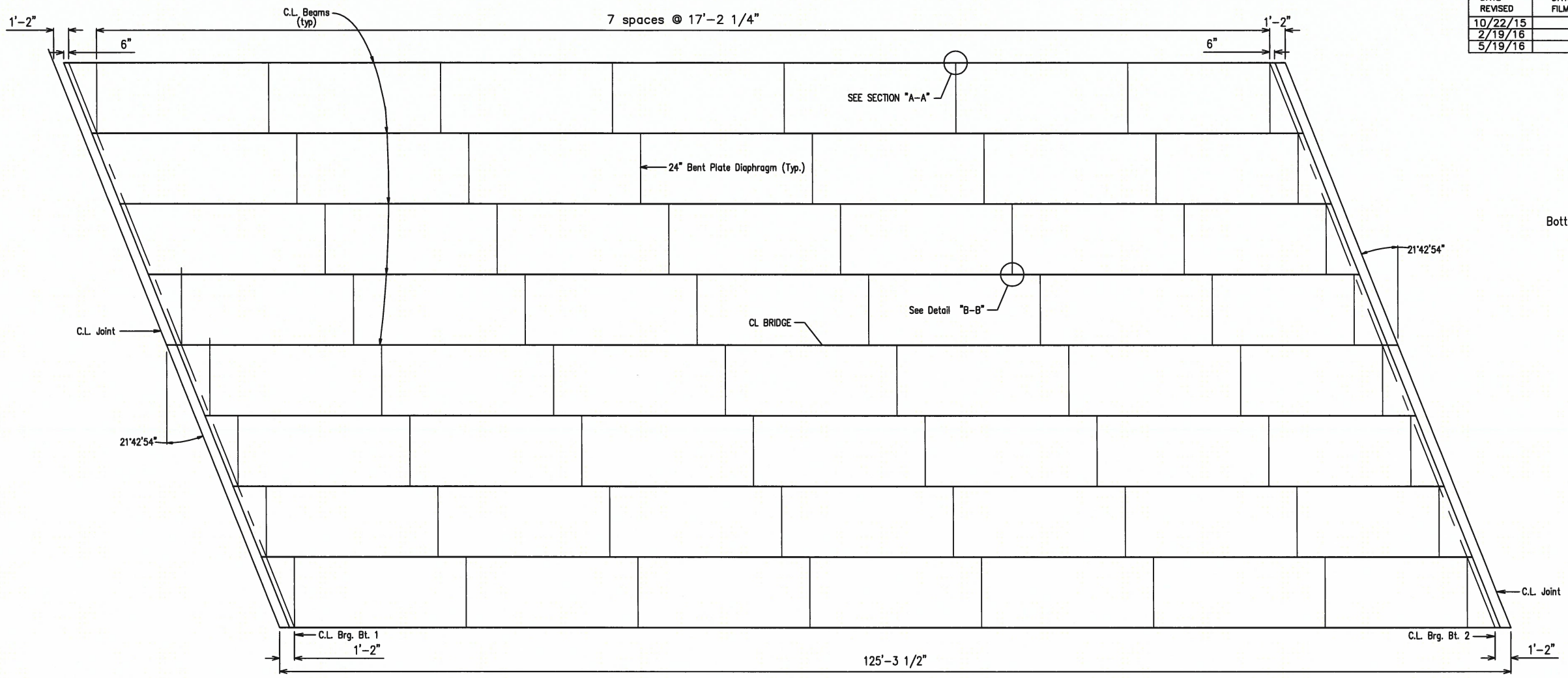

FRAMING PLAN
1" = 5'

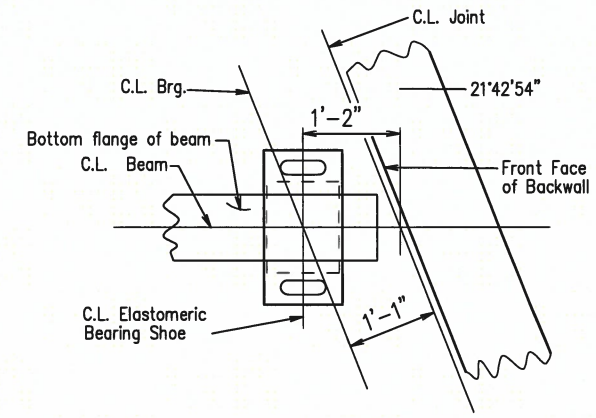

PLAN OF BEARING AT END BENTS
NTS

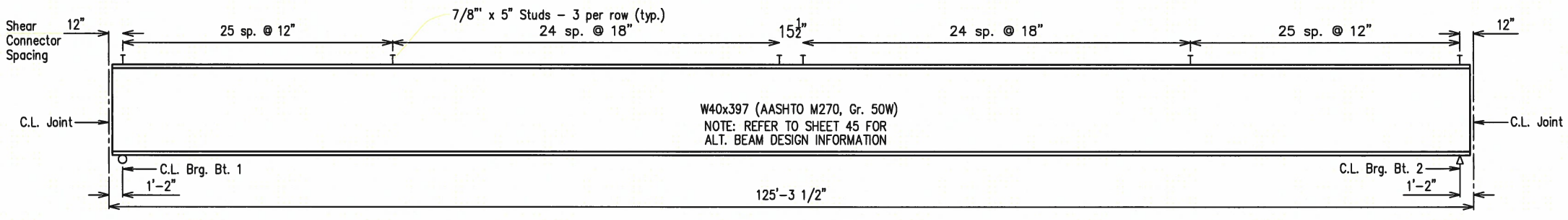

ELEVATION VIEW
NTS

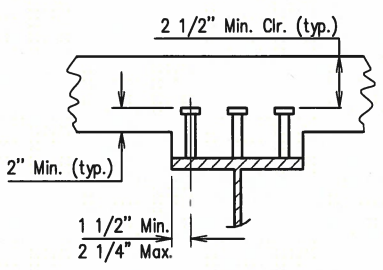

SHEAR CONNECTOR DETAIL
NTS

Stud Shear Connectors shown shall be 7/8" dia. x 4" long, granular flux filled, solid fluxed or equal, and automatically end welded to the beam flange in accordance with the recommendations of the Manufacturer. 3/4" dia. studs may be used in place of the 7/8" studs shown, at the ratio of 1.361 – 3/4" dia. studs in place of one 7/8" dia. stud. 7/8" dia. studs will be used as basis for measurement of structural steel in shear connectors.

TABLE OF DEAD LOAD DEFLECTIONS (INCHES)

Span	Point of Deflection	Structural Steel		Structural Steel + Slab		Structural Steel + Slab + Parapet + Sidewalk	
		Exterior Beam	Interior Beam	Exterior Beam	Interior Beam	Exterior Beam	Interior Beam
1	0.0	0.0	0.0	0.0	0.0	0.0	0.0
	0.1	0.535	0.547	1.372	1.465	1.706	1.800
	0.2	1.012	1.035	2.595	2.772	3.228	3.405
	0.3	1.386	1.416	3.553	3.795	4.420	4.662
	0.4	1.623	1.659	4.161	4.445	5.176	5.460
	0.5	1.704	1.742	4.369	4.667	5.435	5.733
	0.6	1.623	1.659	4.161	4.445	5.176	5.460
	0.7	1.386	1.416	3.553	3.795	4.420	4.662
	0.8	1.012	1.035	2.595	2.772	3.228	3.405
	0.9	0.535	0.547	1.372	1.465	1.706	1.800
	1.0	0.0	0.0	0.0	0.0	0.0	0.0

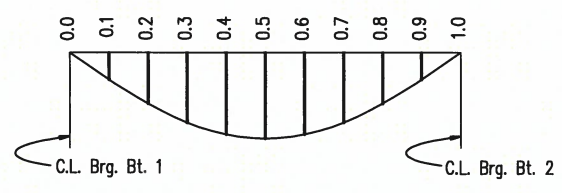

DEAD LOAD DEFLECTION DIAGRAM

NOTE: Camber for Dead Load Deflection +/- 1/4" tolerance. Deflections shown are along C.L. Beam from a chord from C.L. Bearing to C.L. Bearing. Vertical Curve Corrections are not included. Negative sign (–) indicates point above chord.

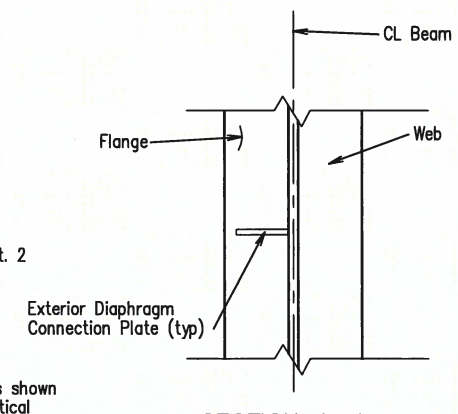

SECTION A–A
Typical for Exterior Beam
NTS

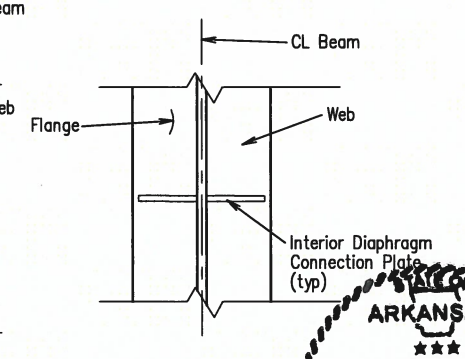

SECTION B–B
Typical for Interior Beam
NTS

MEHLBURGER BRAWLEY
10 N. SHACKLEFORD PLAZA, SUITE 100
LITTLE ROCK, ARKANSAS 72211
(501) 375-5331 - FAX (501) 398-6481
CA # 2532 EXPIRES 12/31/17

STATE OF ARKANSAS ★★★ LICENSED PROFESSIONAL ENGINEER ★★★ No. 13364 LEON M. BRAWLEY, JR.
BRIDGE ENGINEER

SHEET 3 OF 5
DETAILS OF 125' W-BEAM SPAN (BR13)
ROUTE SEC.
CITY OF LITTLE ROCK
LITTLE ROCK, ARK

DRAWN BY: CDP DATE: 10/22/15
CHECKED BY: DB DATE: 10/22/15
DESIGNED BY: MB DATE: 10/22/15
FILENAME: 125' W-BEAM SHT 3 OF 5
SCALE: 1" = 5'
BRIDGE NO. – DRAWING NO.

DATE REVISED	DATE FILMED	DATE REVISED	DATE FILMED	FED. ROAD DIST. NO.	STATE	FED. AID PROJ. NO.	SHEET NO.	TOTAL SHEETS
10/22/15		1/16/17		6	AR			
2/19/16		6/13/17		JOB. NO.		060907	48	67
5/19/16								

(1) 125' W-BEAM SPAN

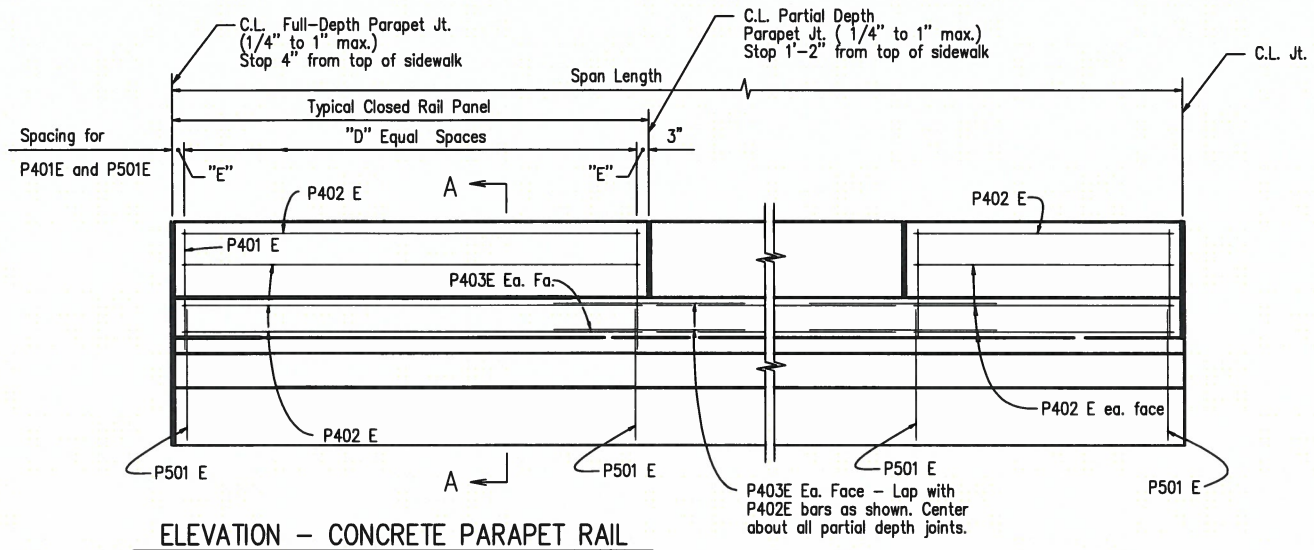

ELEVATION – CONCRETE PARAPET RAIL

1" = 4'

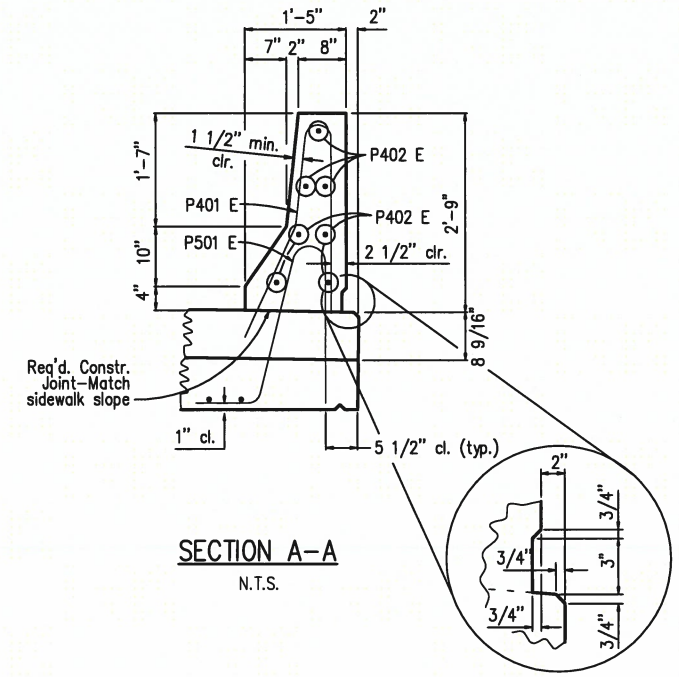

SECTION A-A

N.T.S.

TABLE OF VARIABLES

Closed Rail Panels			
Panel Length	"D"	"E"	P4xx Bar
17'-11 1/8"	35	3"	P402E

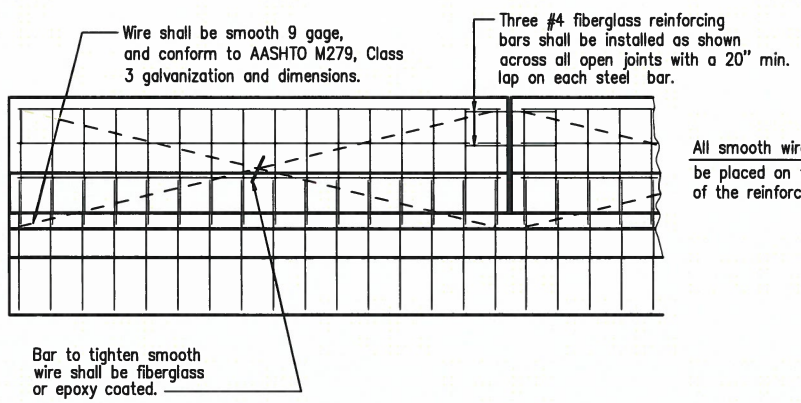

All panels shall be braced as required to prevent racking. All open joints shall be sawed as soon as practical to a minimum width of 1/4". To control cracking before sawing, all joints must be grooved before the concrete is set. Sawing of the joints must be controlled so it will follow the grooved joint.

The extruded parapet shall conform to the horizontal and vertical lines shown on the plans or as directed by the Engineer and shall present a smooth, uniform appearance and texture. Unless otherwise noted, exposed surfaces may be given a light brush finish or a Class 3 Textured Coating Finish in place of Class 2 Rubbed Finish.

DETAILS OF OPTIONAL SLIPFORMING OF CONCRETE PARAPET RAIL

NTS

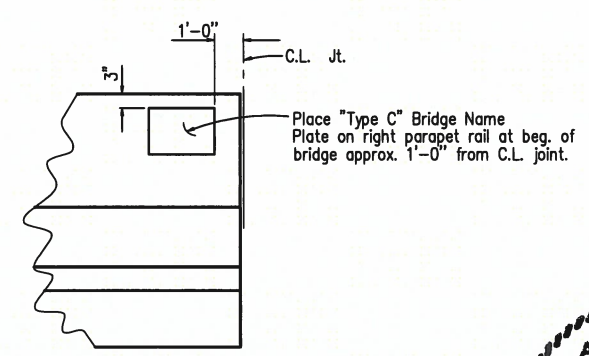

VIEW SHOWING LOCATION OF NAME PLATE

NTS

MEHLBURGER BRAWLEY
10 N. SHACKLEFORD PLAZA, SUITE 100
LITTLE ROCK, ARKANSAS 72211
(501) 375-5331 - FAX (501) 398-6481
CA # 2532 EXPIRES 12/31/17

STATE OF ARKANSAS ★★★ LICENSED PROFESSIONAL ENGINEER ★★★ No. 15365 Leon Dale Burke, JR.

6/13/17

BRIDGE ENGINEER

SHEET 4 OF 5

DETAILS OF 125' W-BEAM SPAN (BR14)

ROUTE SEC.

CITY OF LITTLE ROCK

LITTLE ROCK, ARK

DRAWN BY: CDP DATE: 10/22/15

CHECKED BY: DB DATE: 10/22/15

DESIGNED BY: MB DATE: 10/22/15

FILENAME: 125' W-BEAM SHT 4 OF 5

SCALE: 1" = 4'

BRIDGE NO. –

DRAWING NO.

DATE REVISED	DATE FILMED	DATE REVISED	DATE FILMED	FED. ROAD DIST. NO.	STATE	FED. AID PROJ. NO.	SHEET NO.	TOTAL SHEETS
10/22/15		1/16/17		6	AR			
2/19/16		6/13/17		JOB. NO.		060907	49	67
5/19/16								

① 125' W-BEAM SPAN

GENERAL NOTES

CONSTRUCTION SPECIFICATIONS: Arkansas State Highway and Transportation Department Standard Specifications for Highway Construction (2014 edition) with applicable supplemental specifications and special provisions.

DESIGN SPECIFICATIONS: AASHTO LRFD Bridge Design Specifications, Sixth Edition, with 2013 interim revisions.

MATERIALS AND STRENGTHS:

Class S(AE) Concrete		f'c = 4,000 psi
Reinforcing Steel	(Gr. 60, AASHTO M31 or M322, Type A)	fy = 60,000 psi
Structural Steel	(M 270, Gr. 50W)	Fy = 50,000 psi
Structural Steel	(M 270, Gr. 36)	Fy = 36,000 psi

CONCRETE :

Concrete shall be poured in the dry and all exposed corners to be chamfered 3/4" unless otherwise noted. All concrete shall be Class S(AE) with a minimum 28 day compressive strength f'c = 4,000 psi.

The superstructure details shown are for use when removable deck forming is used and are the basis for measurement of Class S(AE) Concrete. See Standard Drawing for allowable modifications and for tolerances when Permanent Steel Bridge Deck Forms are used.

Concrete in bridge superstructure shall be placed, consolidated and screeded off for the entire pour before any concrete has taken its initial set. This may require the use of a retarding agent.

The concrete deck shall be given a tine finish in accordance with subsection 802.19 for Class 5 Tined Bridge Roadway Surface Finish. Movement of the finishing machine across new concrete shall be on planks placed on the surface and shall be prohibited for 72 hours after finishing the pour. Sufficient concrete must be placed ahead of the strike-off to fully load the beam. A minimum of 72 hours shall elapse between the completion of the slab and the pouring of the sidewalks & pouring of the parapet rails. The sidewalk shall recieve a class 6 broomed finish.

REINFORCING STEEL :

All reinforcing steel shall be Grade 60 conforming to AASHTO M31 or M322, Type A, with mill test reports and shall be epoxy coated. The reinforcing steel is to be accurately located in the forms and firmly held in place by steel wire supports, sufficient in number and size to prevent displacement during the course of construction. The wire supports wil l not be paid for directly but wil l be considered subsidiary to the item "Epoxy Coated Reinforcing Steel (Grade 60)."

STRUCTURAL STEEL :

All structural steel shall be AASHTO M 270, Grade 50W unless otherwise noted and shall be paid for as "Structural Steel in Beam Spans (M 270, Gr. 50W)". Grade 50W steel shall not be painted. All exposed surfaces shall be cleaned in accordance with subsection 807.84(e). Structural steel completely embedded in concrete may be AASHTO M 270, Grade 36 unless otherwise noted.

Drawings show general features of design only. Shop drawings shall be made in accordance with subsection 807.04, submitted and approval secured before fabrication is begun.

Requests for substitution of structural steel shapes shown with shapes of greater size must be submitted by the contractor to the Engineer for approval. Steels of equal or greater strengths will be accepted only when shown on the approved shop drawings. Payment will be based on the basis of shapes and materials shown in the plans, and no additional compensation will be made for any adjustments due to substitutions.

Beams are considered main load carrying members and shall meet the Longitudinal Charpy V-Notch Test specified in subsection 807.05. This work and materials will not be paid for directly, but shall be considered subsidiary to the item "Structural Steel in Beam Spans (M270, Gr. 50W)".

All beams shall be blocked in their true position with webs horizontal. The camber, distance between bearings, and openings of joints shall be measured and this information shall become part of the permanent records. All beam dimensions are based on a temperature of 60 degrees F. A tolerance of 1/4"± is allowed for camber.

All welding that is to be done during fabrication of structural steel, including temporary welds, shall be detailed on the shop drawings and submitted for approval. If additional welds are required, whether permanent or temporary, a formal request with detailed drawings shall be submitted to the Engineer for approval; however, additional welds used for attaching falsework support devices or screed rail supports to the structural steel that do not exceed the limitations of subsection 802.13 will not require approval prior to construction. All welding shall conform to subsection 807.26.

Field connections shall be bolted with high-strength bolts and shall be 3/4" dia. bolts unless otherwise noted. Holes for 3/4" dia. high strength bolts may be 15/16" dia. diameter if a washer is supplied for use under both the nut and head of the bolt.

Steel diaphragms shall be installed as beams are erected. All bolts in diaphragms shall be installed and tightened in accordance with subsection 807.71 prior to pouring the concrete deck unless otherwise noted.

All stud shear connectors shall be granular flux-filled, solid fluxed, or equal and shall be automatically end welded in accordance with recommendations of the Manufacturer.

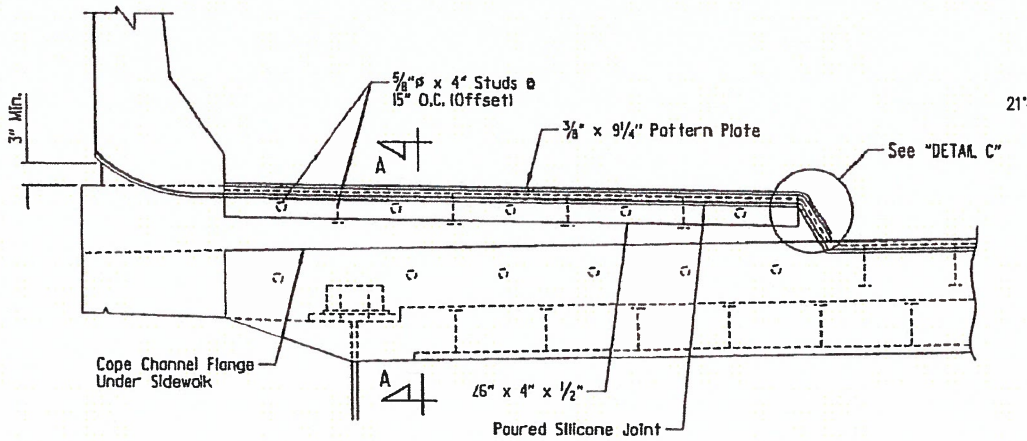

SECTION THRU SIDEWALK

Scale: No Scale

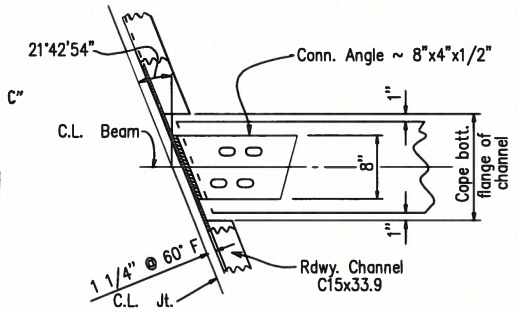

CHANNEL CONNECTION DETAIL

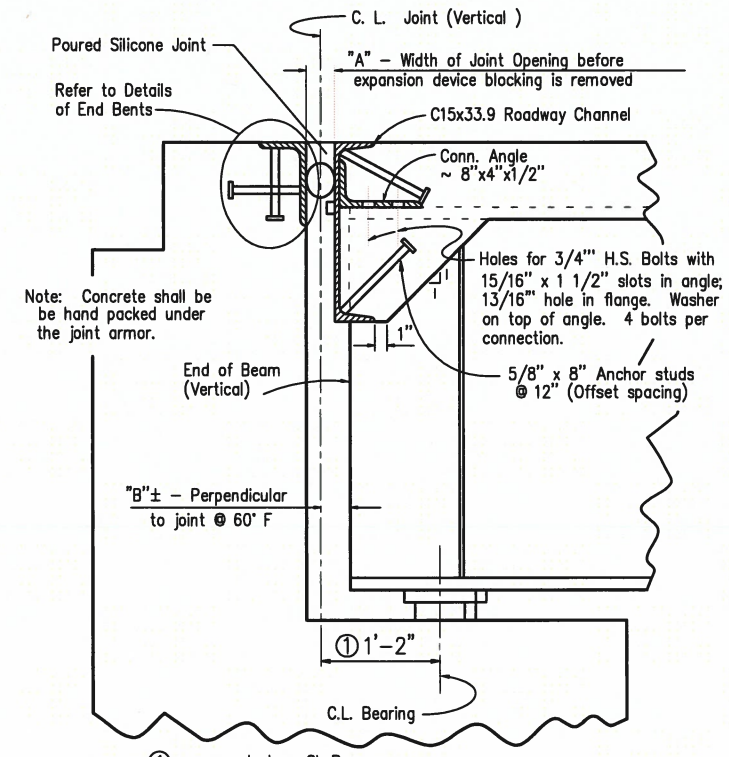

① measured along CL Beam

Note: Section taken perpendicular to C.L. Joint

SECTION THRU JOINT AT END BENT

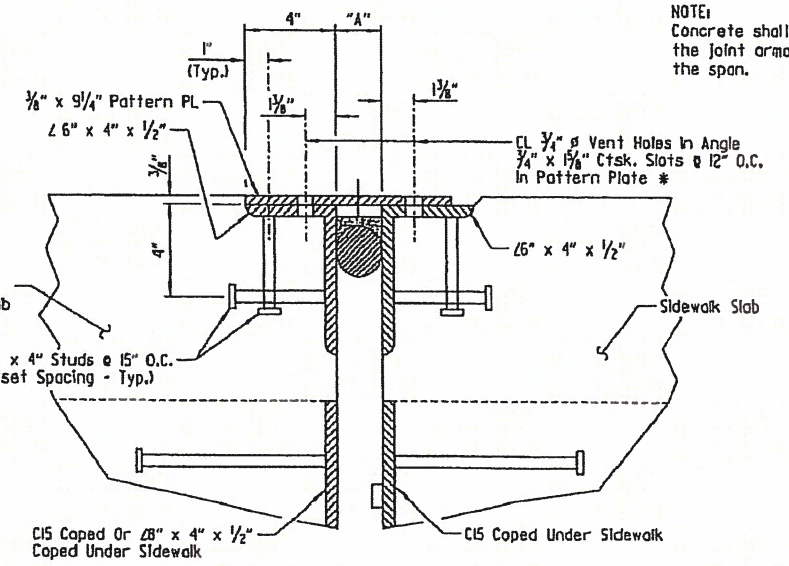

NOTE:
Concrete shall be hand packed under the joint armor in the backwall and in the span.

SECTION A-A

Scale: 3" = 1'-0"

* 3/4" x 1 5/8" Ctsk. Slots in 3/8" Pattern Plates. Top 4" leg of angle for 5/8"ø flat head cap screws @ 12" o.c. Install screws in the shop and ship as a unit. Remove screws on one side after erection is complete.

SILICONE JOINT DATA

"A" Width Perpendicular to Joint at 24 Hour Average Temperature *Of:			"B" Perpendicular to Joint at 60°F	"D"	Bumper Plate Size
40°F	60°F	80°F			
2 5/8"	2 1/2"	2 3/8"	2 1/2"	5"	1" x 1"

* The temperature used to set the joint opening shall be the approximate average air temperature during the 24 hour period immediately before the bolts are tightened. The Engineer shall establish the temperature. Interpolation of the table may be necessary.

Notes:

Silicone Joint material and installation shall conform to Section 809.

The temperature limitations recommended by the sealant Manufacturer shall be observed. The sealant shall be installed only when the average 24 hour air temperature is between 40° and 80° F.

Use an appropriately sized backer rod at the depth shown in the Manufacturer's literature based on the joint width at the time of sealing. Unless otherwise noted, do not install more backer rod than can be sealed in the same day.

The Contractor shall verify separation of the backer rod from the joint material after the joint material has set.

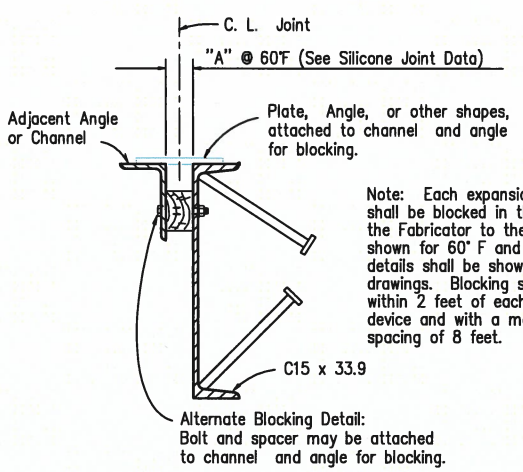

Note: Each expansion joint device shall be blocked in the Shop by the Fabricator to the dimension "A" shown for 60° F and the blocking details shall be shown on the shop drawings. Blocking shall be placed within 2 feet of each end of the device and with a maximum spacing of 8 feet.

DETAILS FOR BLOCK EXPANSION JOINT DEVICE

EXPANSION DEVICE INSTALLATION AT END BENTS:

The Contractor may elect to install the expansion device using one of the following two alternatives:

1) The concrete span pour adjacent to joint shall be placed before the end bent backwall is placed. After the end bent backwall forms are in place and the beams erected, the blocked expansion device shall be installed and adjusted for grade. All connection bolts shall be fully tightened prior to placing the deck concrete adjacent to the bent. Immediately prior to pouring the backwall concrete, the blocking shall be removed, and the opening adjusted for temperature and grade.

2) The backwall shall be poured to the optional construction joint after beams are erected. The blocked expansion device shall be installed and adjusted for grade. All connection bolts shall be fully tightened prior to placing the deck concrete adjacent to the bent. Immediately prior to pouring the remainder of the backwall concrete, the blocking shall be removed and the opening adjusted for temperature and grade.

MEHLBURGER BRAWLEY
10 N. SHACKLEFORD PLAZA, SUITE 100
LITTLE ROCK, ARKANSAS 72211
(501) 375-5331 · FAX (501) 398-6481
CA # 2532 EXPIRES 12/31/17

STATE OF ARKANSAS ★★★ LICENSED PROFESSIONAL ENGINEER ★★★ No. 13363 Leon Dale Burke, Jr.

6/13/17

BRIDGE ENGINEER

SHEET 5 OF 5

DETAILS OF 125' W-BEAM SPAN (BR15)

ROUTE SEC.

CITY OF LITTLE ROCK

LITTLE ROCK, ARK

DRAWN BY: CDP	DATE: 10/22/15	FILENAME: 125' W-BEAM SHT 5 OF 5	
CHECKED BY: DB	DATE: 10/22/15	SCALE: NTS	
DESIGNED BY: MB	DATE: 10/22/15		

BRIDGE NO. — DRAWING NO.

DATE REVISED	DATE FILMED	DATE REVISED	DATE FILMED	FED. ROAD DIST. NO.	STATE	FED. AID PROJ. NO.	SHEET NO.	TOTAL SHEETS
10/22/15		1/16/17		6	AR			
2/19/16		6/13/17		JOB. NO.		060907	50	67
5/19/16								

1 DETAILS

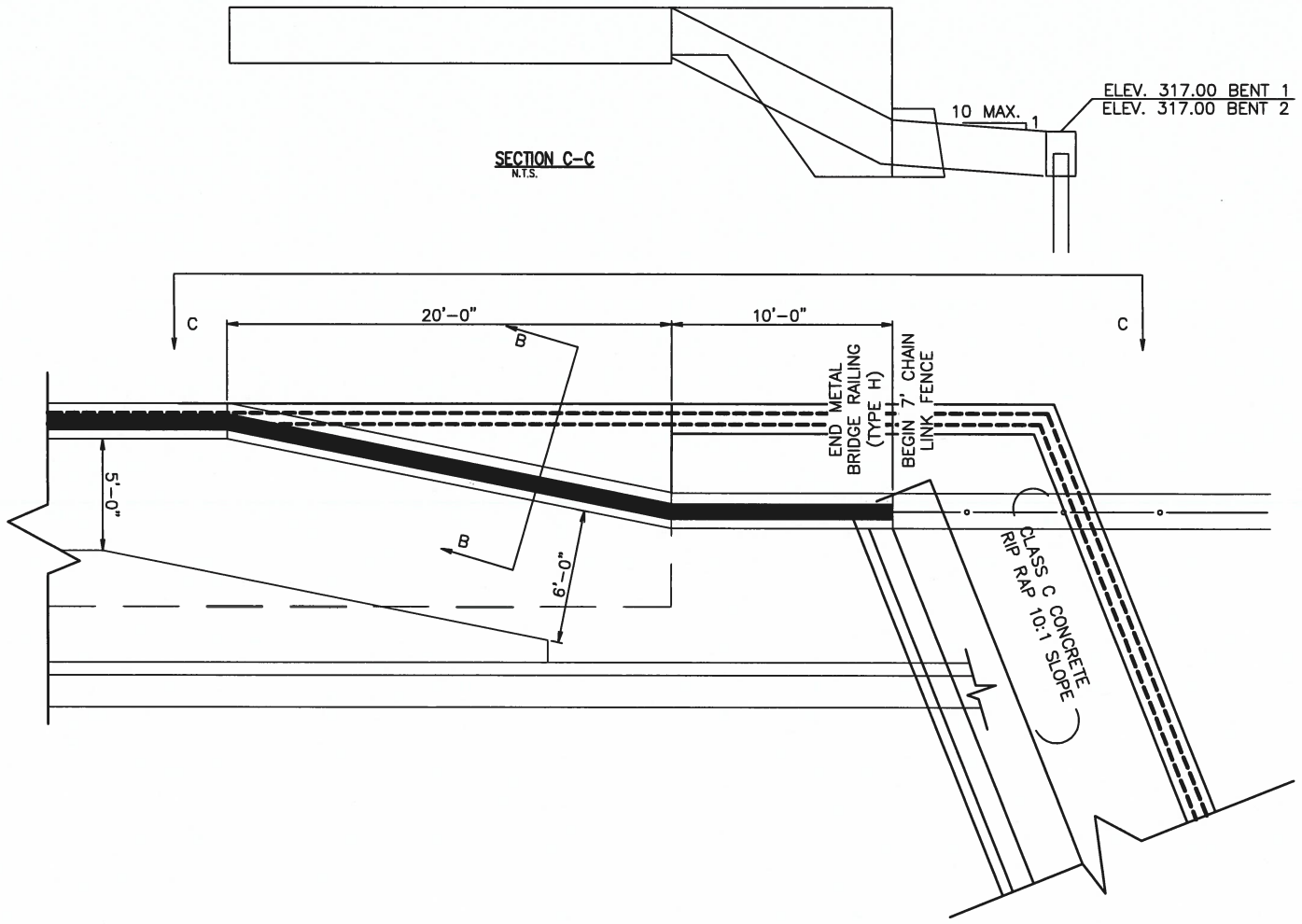

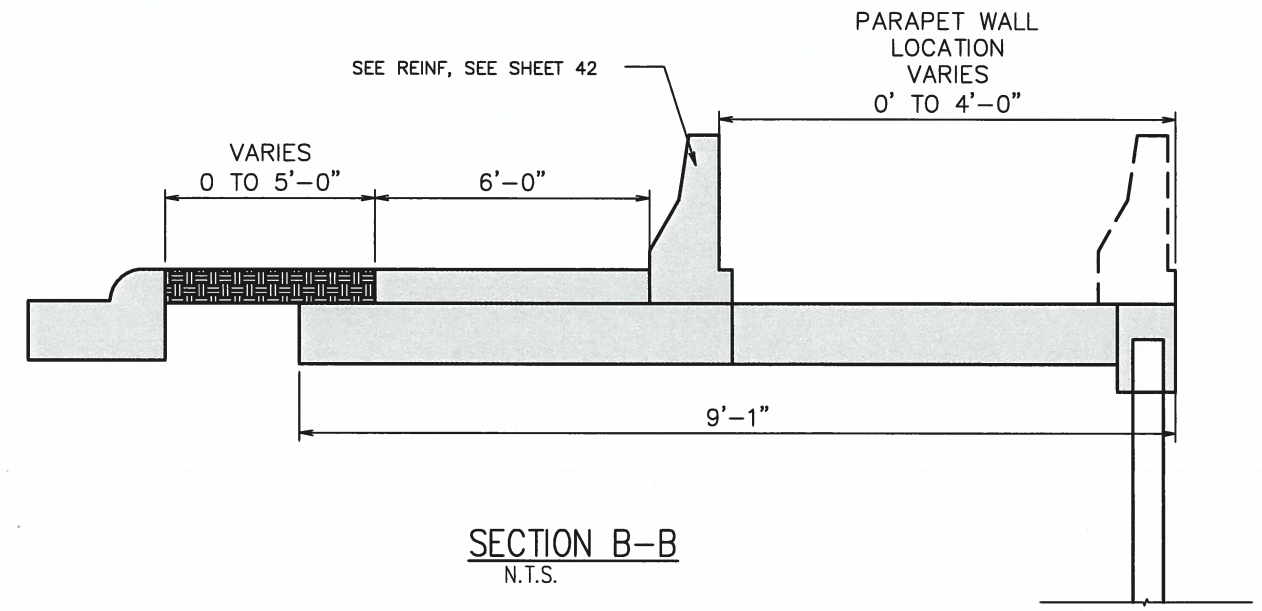

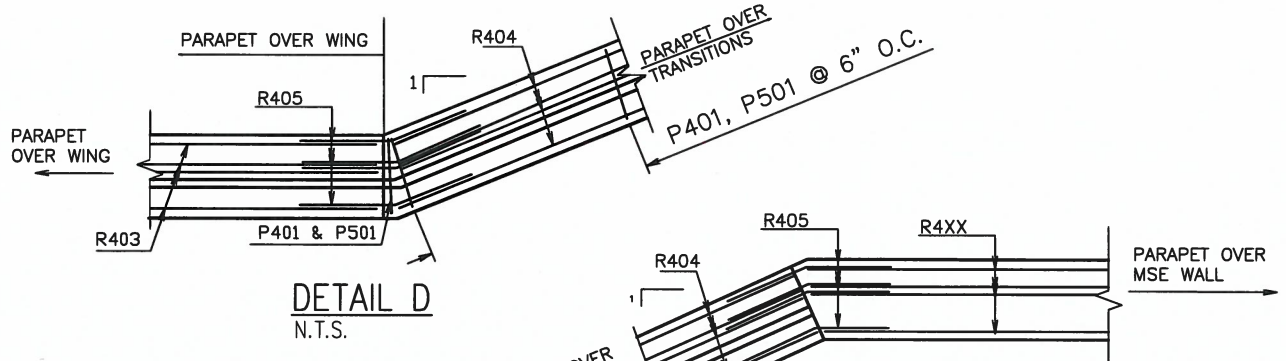

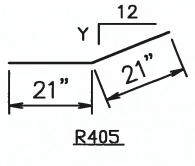

ABT	Y
NE	$2\frac{1}{2}$
NW	$2\frac{5}{16}$
SE	$2\frac{7}{16}$
SW	3

MEHLBURGER BRAWLEY
10 N. SHACKLEFORD PLAZA, SUITE 100
LITTLE ROCK, ARKANSAS 72211
(501) 375-5331 - FAX (501) 398-6481
CA # 2532 EXPIRES 12/31/17

STATE OF ARKANSAS ★★★ LICENSED PROFESSIONAL ENGINEER ★★★ No. 15365 Leon Dale Burke, Jr.

6/13/17

BRIDGE ENGINEER

MISC. DETAILS (BR16)

ROUTE SEC.

CITY OF LITTLE ROCK

LITTLE ROCK, ARK

DRAWN BY: CDP DATE: 10/22/15 FILENAME: DETAILS

CHECKED BY: DB DATE: 10/22/15 SCALE: NTS

DESIGNED BY: MB DATE: 10/22/15

BRIDGE NO. — DRAWING NO.

DATE REVISED	DATE FILMED	DATE REVISED	DATE FILMED	FED. RD. DIST. NO.	STATE	FED. AID PROJ. NO.	SHEET NO.	TOTAL SHEETS
10/22/15		1/16/17		6	AR			
2/19/16		6/13/17		JOB No.		060907	50A	67
5/19/16				GRADING PLAN				

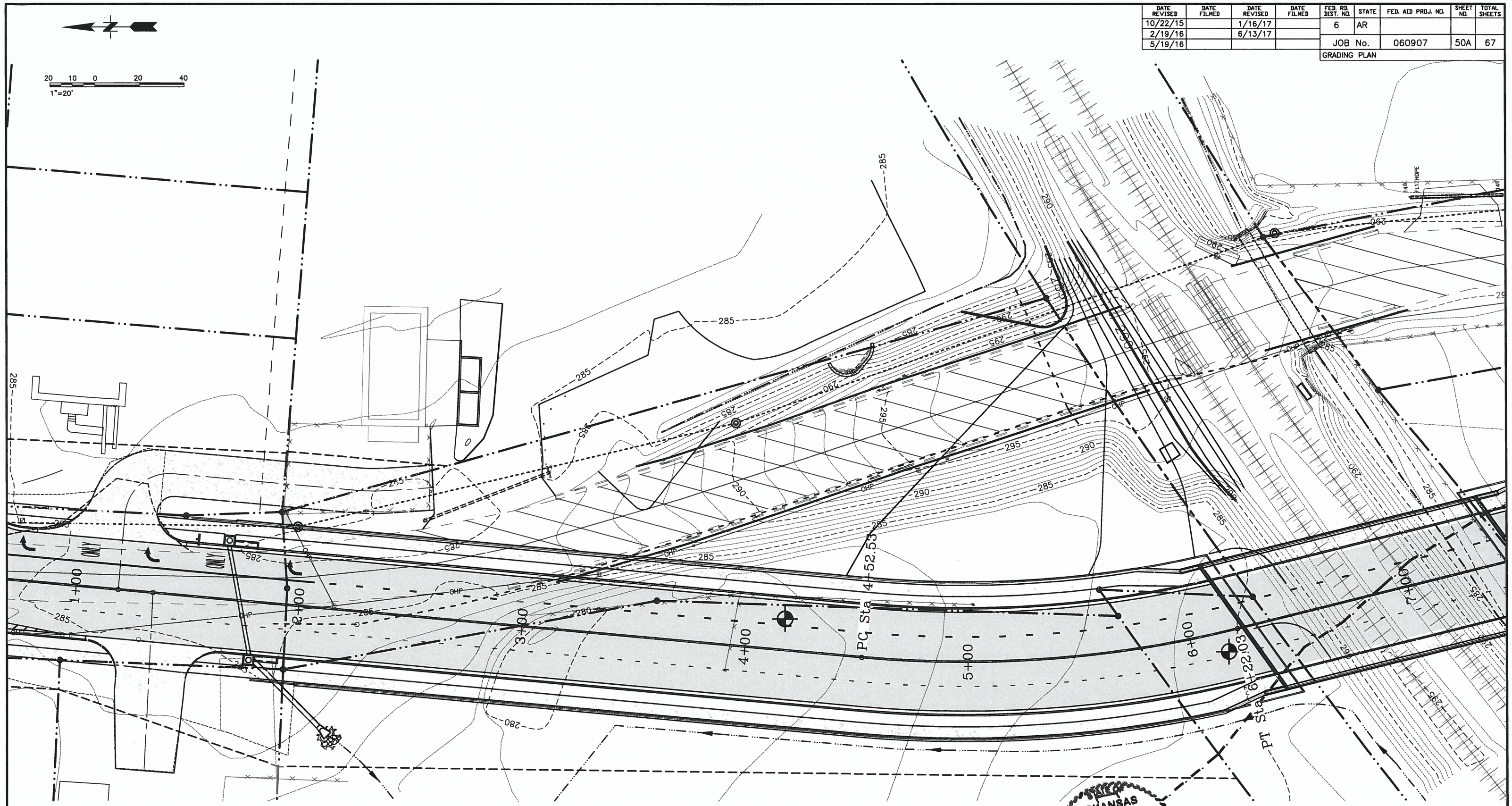

MEHLBURGER BRAWLEY
10 N. SHACKLEFORD PLAZA, SUITE 104
LITTLE ROCK, ARKANSAS 72211
(501) 375-5331 - FAX (501) 398-6481
CA # 2532 EXPIRES 12/31/17

STATE OF ARKANSAS
LICENSED PROFESSIONAL ENGINEER
No. 13263
Leon Dale Burke, Jr.

6/13/17
BRIDGE ENGINEER

GEYER SPRINGS OVERPASS
ROUTE SEC.
CITY OF LITTLE ROCK
LITTLE ROCK, ARK

DRAWN BY: CDP	DATE: 10/22/15	FILENAME: EROSION CONTROL	
CHECKED BY: DB	DATE: 10/22/15	SCALE: 1" = 20'	
DESIGNED BY: MB	DATE: 10/22/15		

BRIDGE NO. — DRAWING NO.

DATE REVISED	DATE FILMED	DATE REVISED	DATE FILMED
10/22/15		1/16/17	
2/19/16		6/13/17	
5/19/16			

FED. ROAD DIST. NO.	STATE	FED. AID PROJ. NO.	SHEET NO.	TOTAL SHEETS
6	AR			
JOB. NO.		060907	51	67

(1) MSE WALL PROFILE (NORTH)

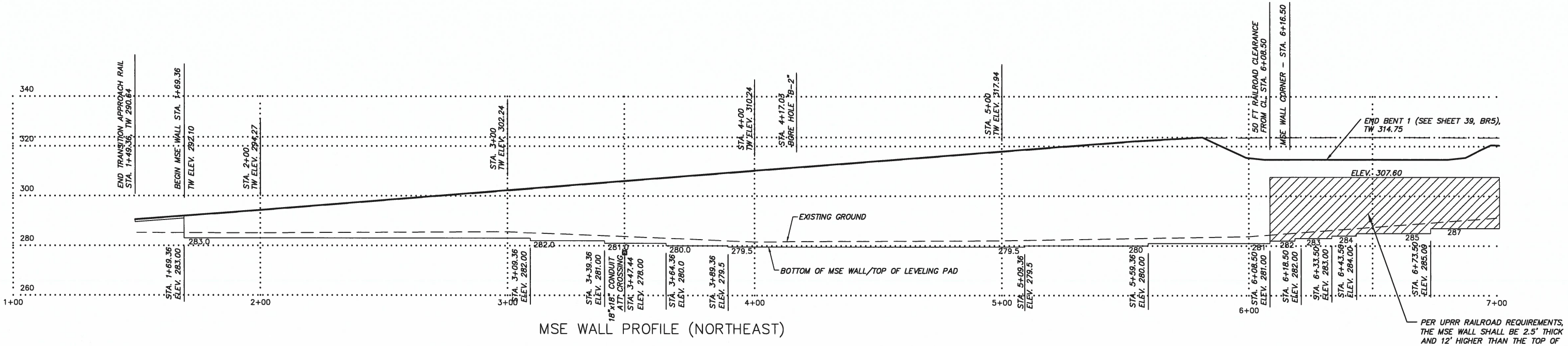

MSE WALL PROFILE (NORTHEAST)

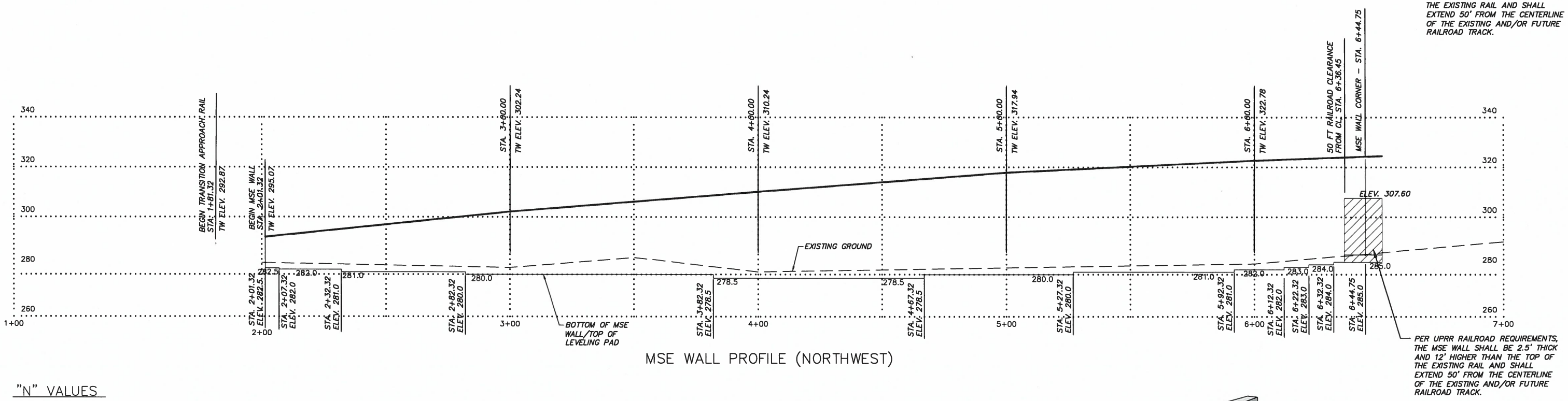

MSE WALL PROFILE (NORTHWEST)

"N" VALUES

Boring B-2

0.0 – 8.0, N=50/6"
8.0 – 10.0, N=50/2"
10.0 – 50.0, N=25/0"

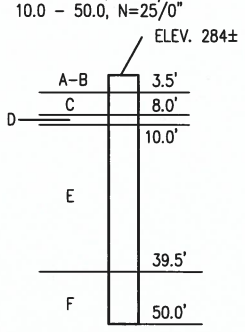

BORING B-2

MSE WALL PROFILE – NORTH

MEHLBURGER BRAWLEY
10 N. SHACKLEFORD PLAZA, SUITE 104
LITTLE ROCK, ARKANSAS 72211
(501) 375-5331 - FAX (501) 398-6481
CA # 2532 EXPIRES 12/31/17

STATE OF ARKANSAS ★★★ LICENSED PROFESSIONAL ENGINEER ★★★ No. 13363 Leon Dale Burke, Jr.

6/13/17

BRIDGE ENGINEER

SHEET 1 OF 7
MSE WALL PROFILE (NORTH)

ROUTE SEC.

CITY OF LITTLE ROCK
LITTLE ROCK, ARK

DRAWN BY: CDP DATE: 10/22/15
CHECKED BY: DB DATE: 10/22/15
DESIGNED BY: MB DATE: 10/22/15

FILENAME: MSE WALL NORTH
SCALE: 1" = 20'

BRIDGE NO. – DRAWING NO.

DATE REVISED	DATE FILMED	DATE REVISED	DATE FILMED
10/22/15		1/16/17	
2/19/16		6/13/17	
5/19/16			

FED. ROAD DIST. NO.	STATE	FED. AID PROJ. NO.	SHEET NO.	TOTAL SHEETS
6	AR			
JOB. NO.		060907	52	67

(1) MSE WALL PROFILE (SOUTH)

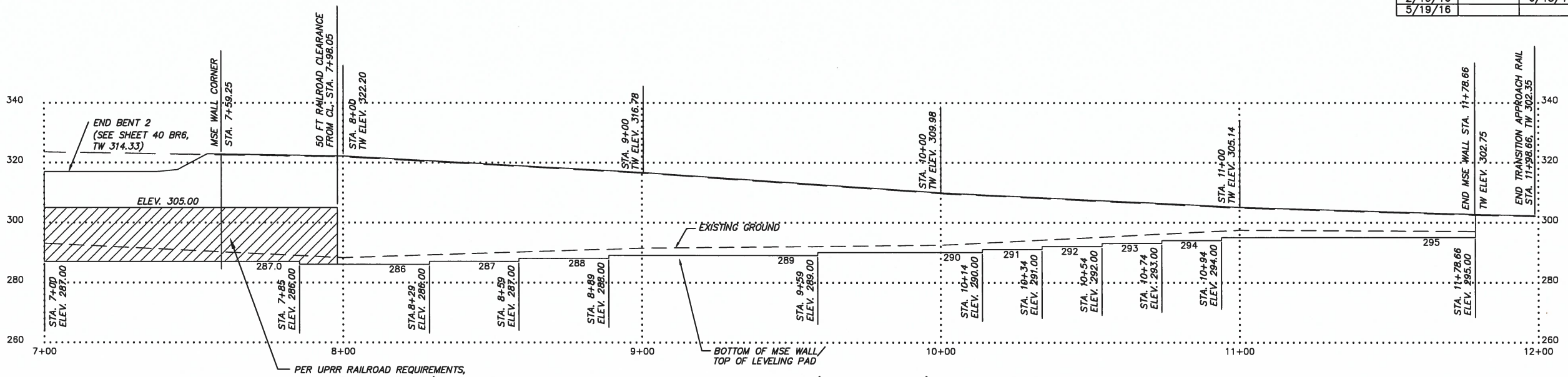

MSE WALL PROFILE (SOUTHWEST)

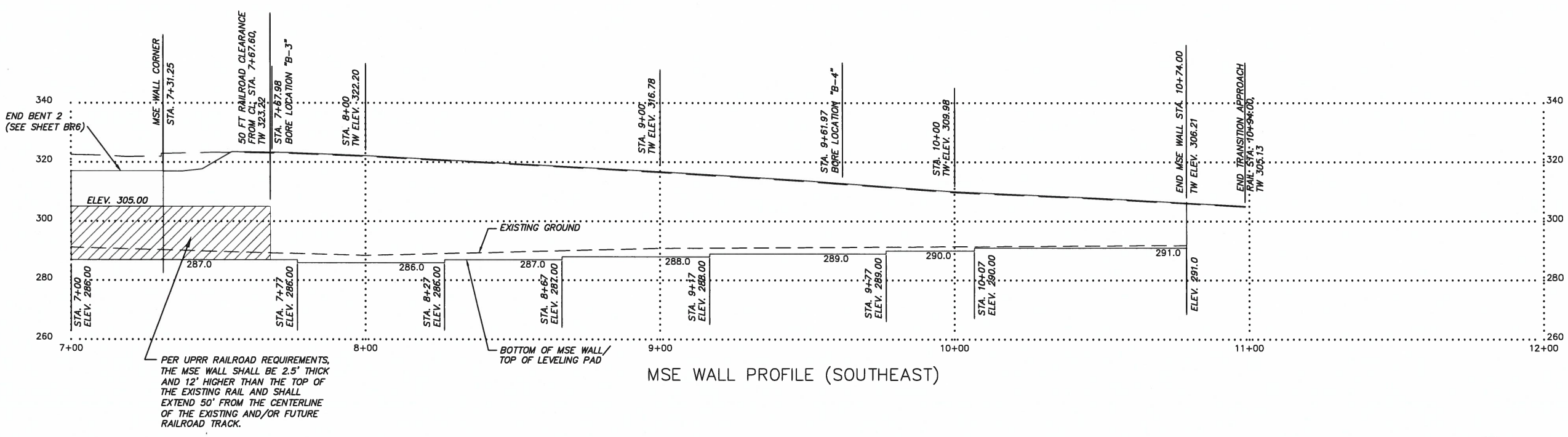

MSE WALL PROFILE (SOUTHEAST)

"N" VALUES

Boring B-3

0.0 – 2.0, N=18
2.0 – 5.0, N=50/7"
5.0 – 50.0, N=25/0"

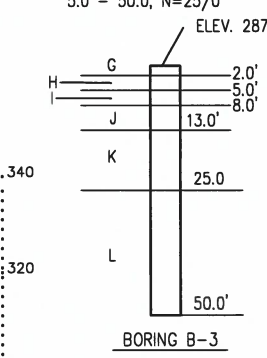

BORING B-3

Boring B-4

0.0 – 2.0, N=8
2.0 – 7.0, N=50/4"
7.0 – 50.0, N=25/0"

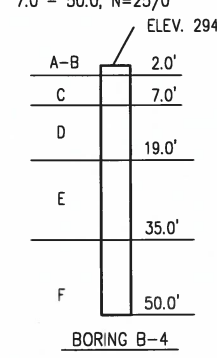

BORING B-4

MSE WALL PROFILE – SOUTH

MEHLBURGER BRAWLEY
10 N. SHACKLEFORD PLAZA, SUITE 104
LITTLE ROCK, ARKANSAS 72211
(501) 375-5331 - FAX (501) 398-6481
CA # 2532 EXPIRES 12/31/17

STATE OF ARKANSAS
LICENSED PROFESSIONAL ENGINEER
No. 13365
Leon Dale Burke, JR.

6/13/17
BRIDGE ENGINEER

SHEET 2 OF 7
MSE WALL PROFILE (SOUTH)
ROUTE SEC.
CITY OF LITTLE ROCK
LITTLE ROCK, ARK

DRAWN BY: CDP DATE: 10/22/15
CHECKED BY: DB DATE: 10/22/15
DESIGNED BY: MB DATE: 10/22/15
FILENAME: MSE WALL SOUTH
SCALE: 1" = 6'
BRIDGE NO. – DRAWING NO.

DATE REVISED	DATE FILMED	DATE REVISED	DATE FILMED	FED. ROAD DIST. NO.	STATE	FED. AID PROJ. NO.	SHEET NO.	TOTAL SHEETS
10/22/15		1/16/17		6	AR			
2/19/16		6/13/17		JOB. NO.		060907	53	67
5/19/16								

(1) MSE RETAINING WALL DETAILS

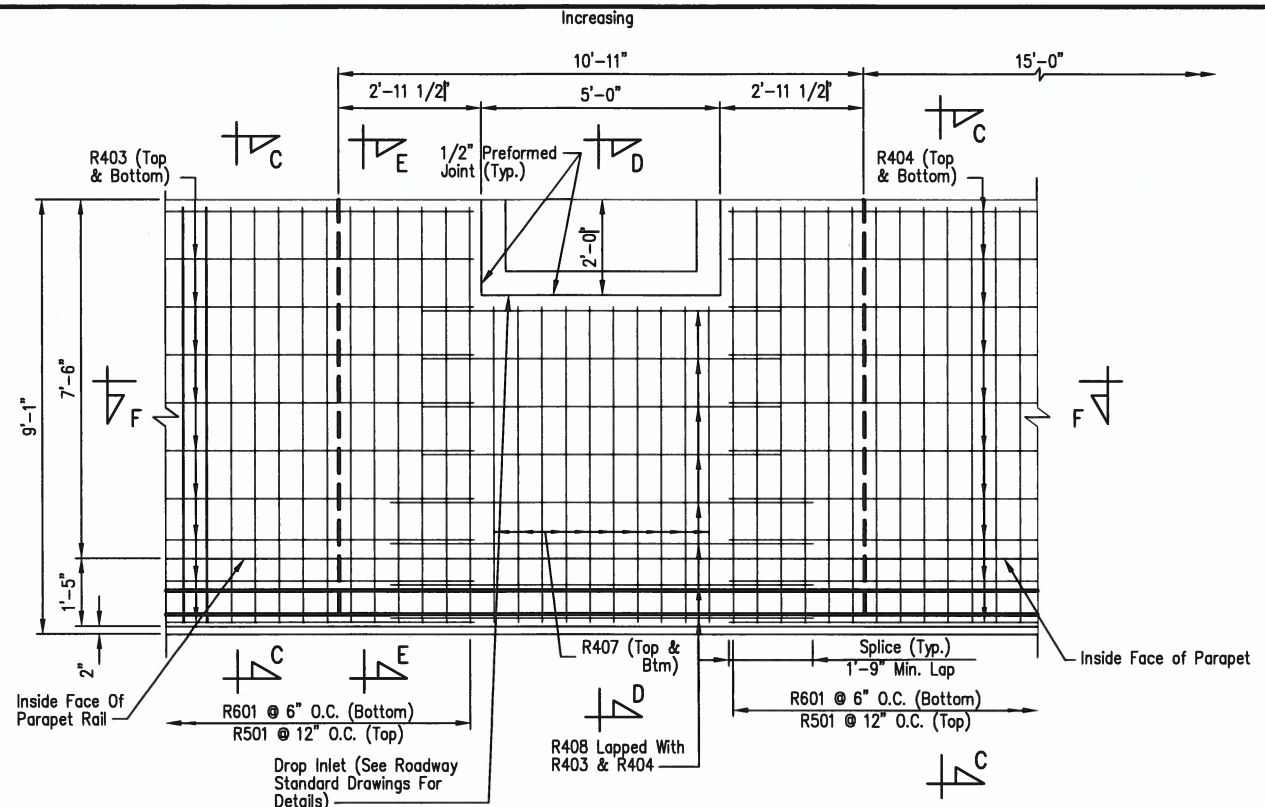

PLAN – MOMENT SLAB AT DROP INLET

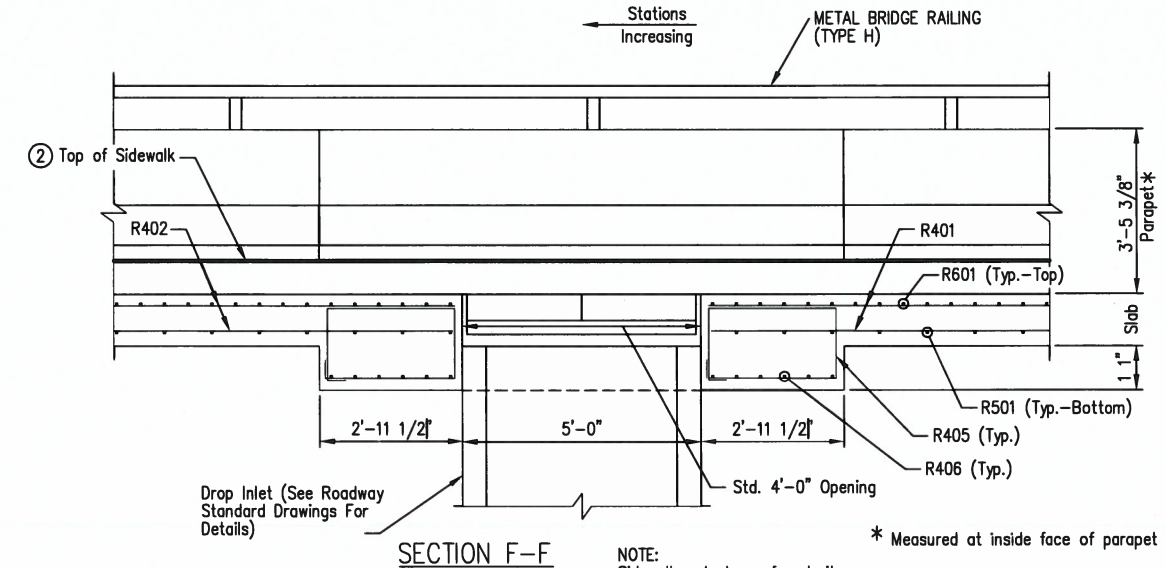

SECTION F–F

Scale: 1" = 1'-0"

NOTE:
Sidewalk not shown for clarity.

* Measured at inside face of parapet

TABLE OF QUANTITIES	
ITEM NO.	806
ITEM	METAL BRIDGE RAILING (TYPE H)
UNIT	LINEAR FOOT
	1616

GENERAL NOTES

All concrete for the moment slab, concrete barrier and sidewalk shall be Class S(AE) f'c = 4,000 psi.

All reinforcing steel shall conform to AASHTO M31 or M322 Type A, Grade 60 (fy = 60,000 psi).

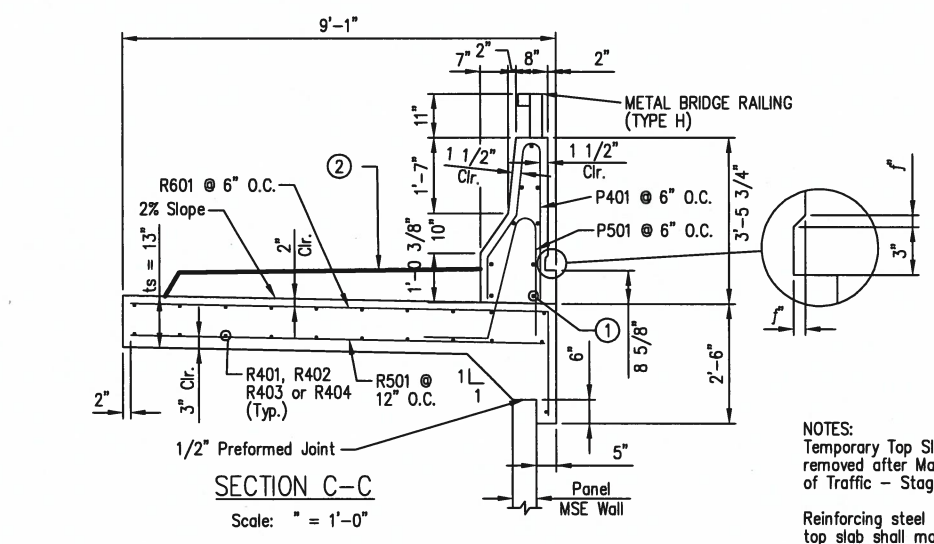

SECTION C–C

Scale: " = 1'-0"

NOTES:
Temporary Top Slab to be removed after Maintenance of Traffic – Stage 3.

Reinforcing steel in temporary top slab shall maintain 2" min. clr. cover.

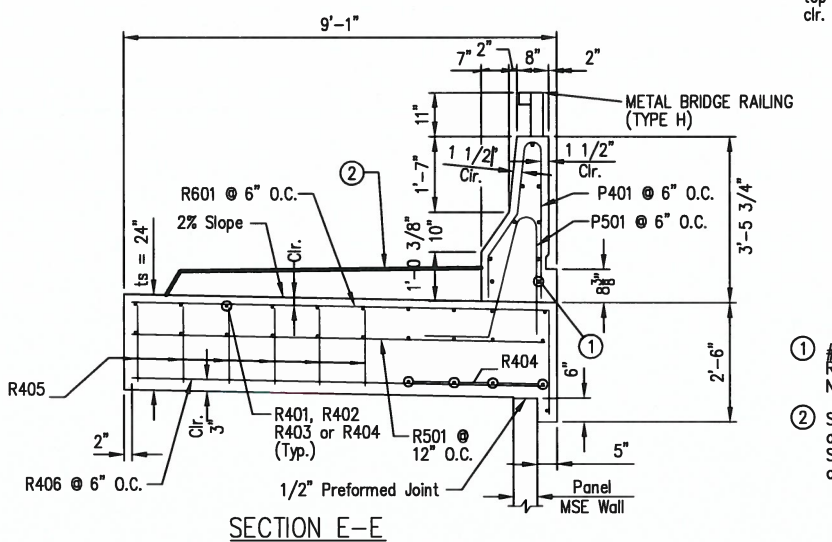

SECTION E–E

Scale: 1" = 1'-0"

(1) #4 bars (Typ. – See "PARAPET REINFORCING DETAILS" on Dwg. No. 54 THRU 57 for bar designations)

(2) Sidewalk to be constructed after Maintenance of Traffic, See "SIDEWALK DETAILS" on Dwg. No. 42.

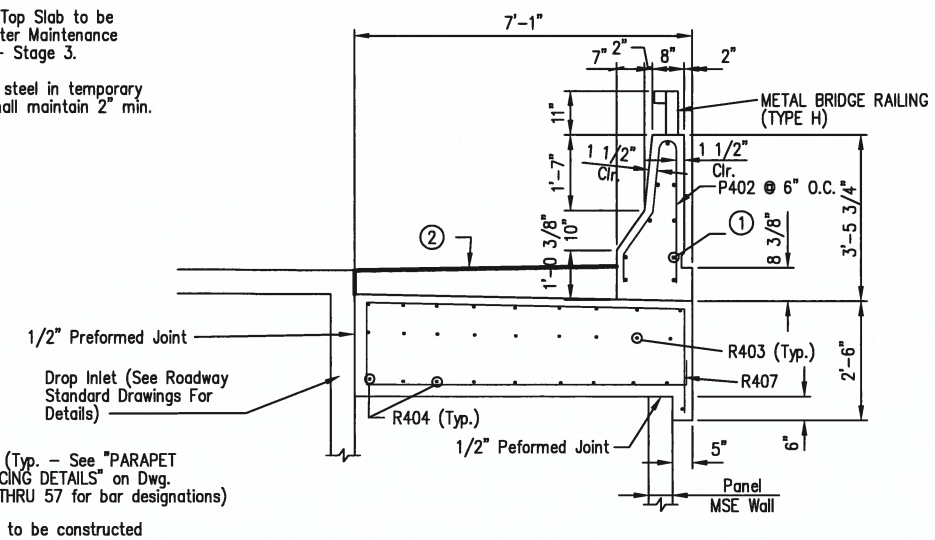

SECTION D–D

Scale: 1" = 1'-0"

** Temporary drain opening shall be filled with concrete when sidewalk is constructed.

MEHLBURGER BRAWLEY
10 N. SHACKLEFORD PLAZA, SUITE 104
LITTLE ROCK, ARKANSAS 72211
(501) 375-5331 - FAX (501) 398-6481
CA # 2532 EXPIRES 12/31/17

STATE OF ARKANSAS ★★★ LICENSED PROFESSIONAL ENGINEER ★★★ No. 13363 Leon Dale Burke, Jr.

6/13/17

BRIDGE ENGINEER

SHEET 3 OF 7
DETAILS OF MSE RETAINING WALL
ROUTE SEC.
CITY OF LITTLE ROCK
LITTLE ROCK, ARK

DRAWN BY: CDP DATE: 10/22/15
CHECKED BY: DB DATE: 10/22/15
DESIGNED BY: MB DATE: 10/22/15

FILENAME: MSE 3 OF 7 WALL DTL
SCALE: 1" = 1'-0"

BRIDGE NO. – DRAWING NO.

DATE REVISED	DATE FILMED	DATE REVISED	DATE FILMED	FED. ROAD DIST. NO.	STATE	FED. AID PROJ. NO.	SHEET NO.	TOTAL SHEETS
10/22/15		1/16/17		6	AR			
2/19/16		6/13/17		JOB. NO.		060907	54	67
5/19/16								

(1) MSE (SW) RETAINING WALL DETAILS

(F) CL Full-Depth Parapet Joint (1/2" Wide) Stop at top of moment slab.

(P) CL Partial-Depth Parapet Joint (1/2" to 1" Max.) Stop 1'-10..." from top of moment slab.

NOTE: Metal Bridge Railing (Type H) not shown for clarity.

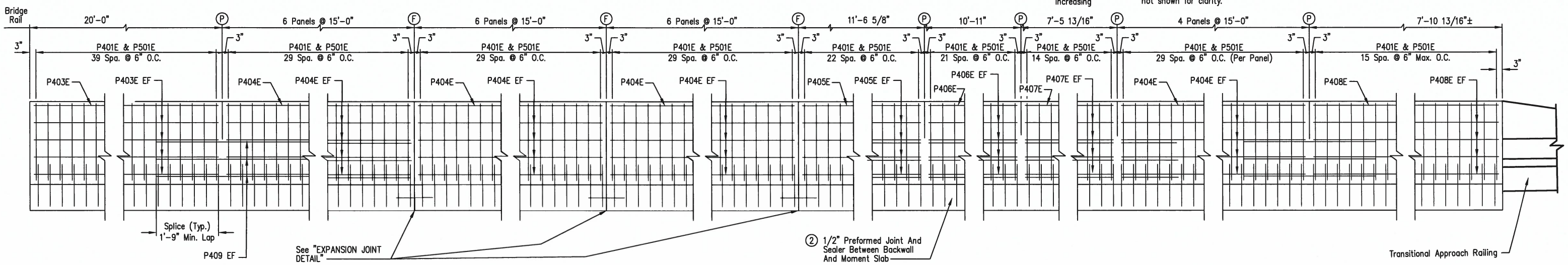

* Measured at inside face of parapet

** Temporary drain opening shall be filled with concrete when sidewalk is constructed.

(2) Use 1/2" Preformed Joint AASHTO M153 Type 1 and 1/2" x 1" Type 3 or 4 Joint Sealer. See Subsections 501.02(h) and 501.05(j)

NOTES:
For moment slab reinforcing details, see sheet 53

PARAPET REINFORCING DETAILS

(Looking At Front Face Of Parapet)
Scale: 1/2" = 1'-0"

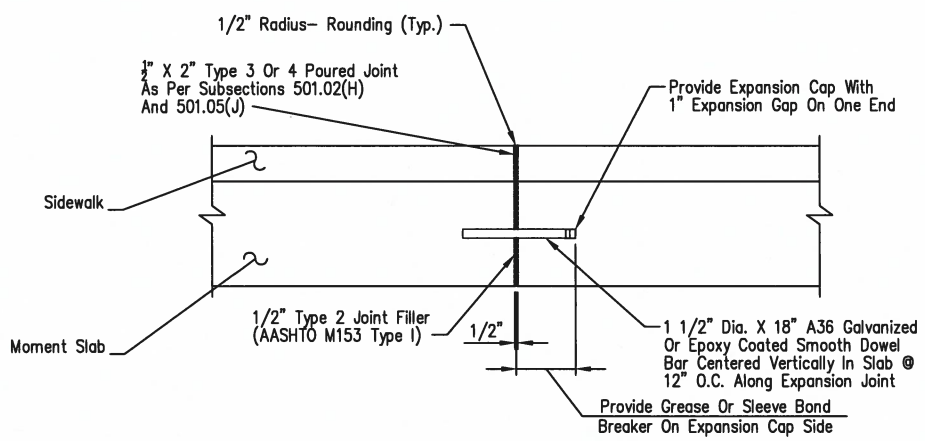

EXPANSION JOINT DETAIL

No Scale

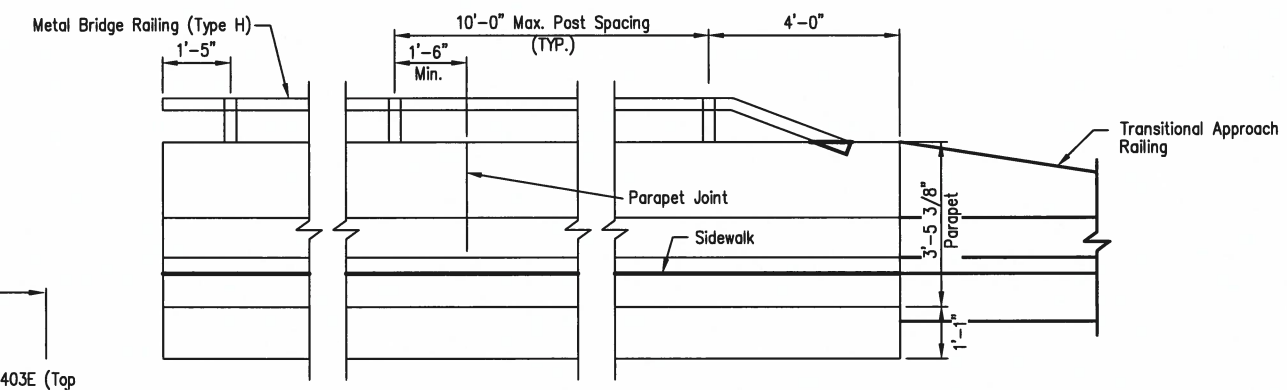

NOTE:
For details on the Metal Bridge Railing (Type H), see sheet 53

ELEVATION – METAL BRIDGE RAILING (TYPE H)

(Looking At Front Face Of Parapet)
Scale: 1" = 1'-0"

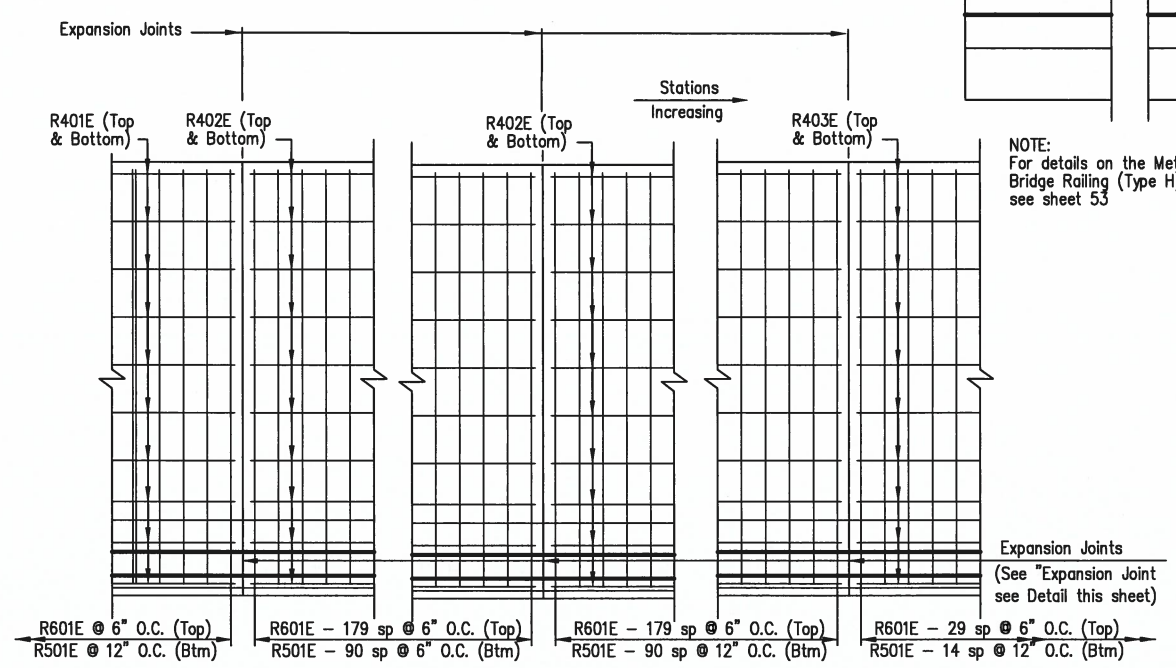

PLAN MOMENT SLAB – SOUTHWEST MSE WALL

BAR LIST

MARK	NO. REQ'D	LENGTH	P.D.
R401E	63	38'-1"	Str.
R402E	63	31'-7"	Str.
R403E	63	14'-2"	Str.
R404E	42	39'-0"	Str.
R405E	12	8'-9"	2"
R406E	12	8'-9"	Str.
R407E	18	9'-8"	2"
R408E	16	8'-10"	Str.
R501E	386	8'-9"	Str.
R601E	765	10'-9"	4 1/2"
P401E	810	6'-8"	3"
P403E	9	19'-8"	Str.
P404E	225	14'-8"	Str.
P405E	9	11'-4"	Str.
P406E	9	10'-7"	Str.
P407E	9	7'-1"	Str.
P408E	9	7'-6"	Str.
P501E	776	6'-5"	3 3/4"
P409E	138	3'-10"	Str.

BAR BENDING DIAGRAMS

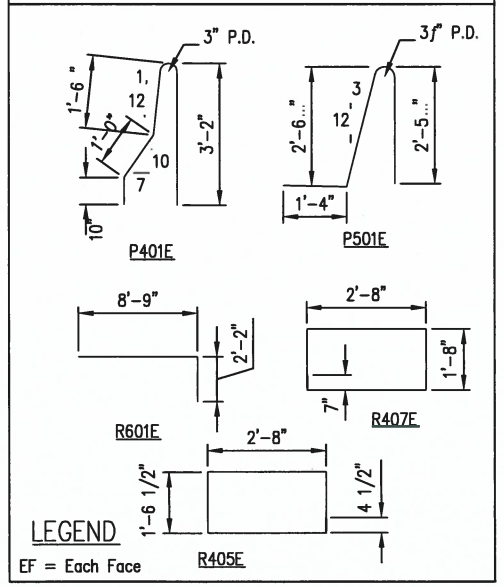

LEGEND
EF = Each Face

NOTE:
Dimensions of bars in "BAR BENDING DIAGRAMS" are out-to-out.

MEHLBURGER BRAWLEY
10 N. SHACKLEFORD PLAZA, SUITE 100
LITTLE ROCK, ARKANSAS 72211
(501) 375-5331 - FAX (501) 398-6481
CA # 2532 EXPIRES 12/31/17

STATE OF ARKANSAS ★★★ LICENSED PROFESSIONAL ENGINEER ★★★ No. 13365 Leon Dale Burke, Jr.

6/13/17
BRIDGE ENGINEER

SHEET 4 OF 7
DETAILS OF MSE (SOUTHWEST) RETAINING WALL
ROUTE SEC.
CITY OF LITTLE ROCK
LITTLE ROCK, ARK

DRAWN BY: CDP DATE: 10/22/15
CHECKED BY: DB DATE: 10/22/15
DESIGNED BY: MB DATE: 10/22/15
FILENAME: MSE 4 OF 7 WALL DTL(SW)
SCALE: 1/2" = 1'-0"
BRIDGE NO. – DRAWING NO.

DATE REVISED	DATE FILMED	DATE REVISED	DATE FILMED	FED. ROAD DIST. NO.	STATE	FED. AID PROJ. NO.	SHEET NO.	TOTAL SHEETS
10/22/15		1/16/17		6	AR			
2/19/16		6/13/17		JOB. NO.		060907	55	67
5/19/16								

(1) MSE (SE) RETAINING WALL DETAILS

(F) CL Full-Depth Parapet Joint (1/2" Wide)
Stop at top of moment slab.

(P) CL Partial-Depth Parapet Joint (1/2" to 1" Max.)
Stop 1'-10..." from top of moment slab.

NOTE:
Metal Bridge Railing (Type H)
not shown for clarity.

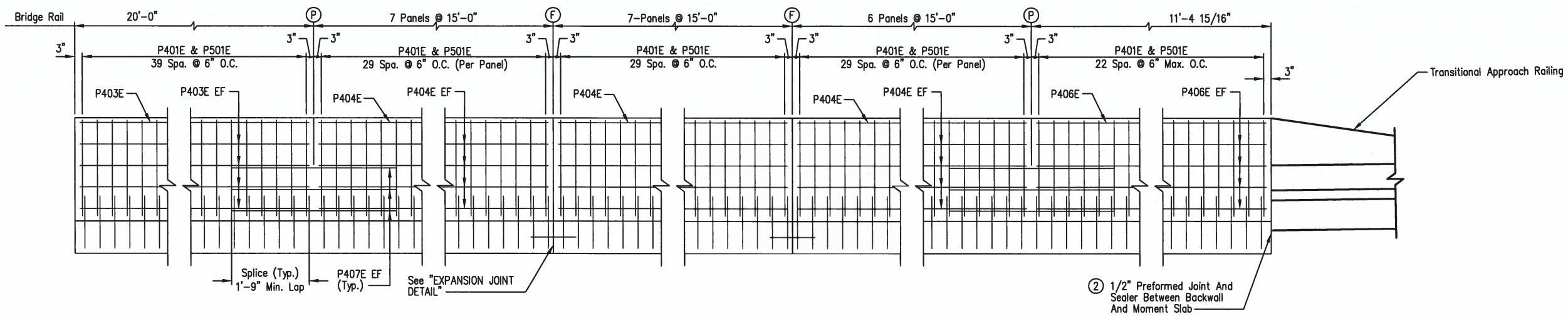

* Measured at inside face of parapet

** Temporary drain opening shall be filled with concrete when sidewalk is constructed.

NOTES:
For moment slab reinforcing details, see sheet 53

PARAPET REINFORCING DETAILS

(Looking At Front Face Of Parapet)
Scale: 1/2" = 1'-0"

(2) Use 1/2" Preformed Joint AASHTO M153 Type 1 and 1/2" x 1" Type 3 or 4 Joint Sealer. See Subsections 501.02(h) and 501.05(j)

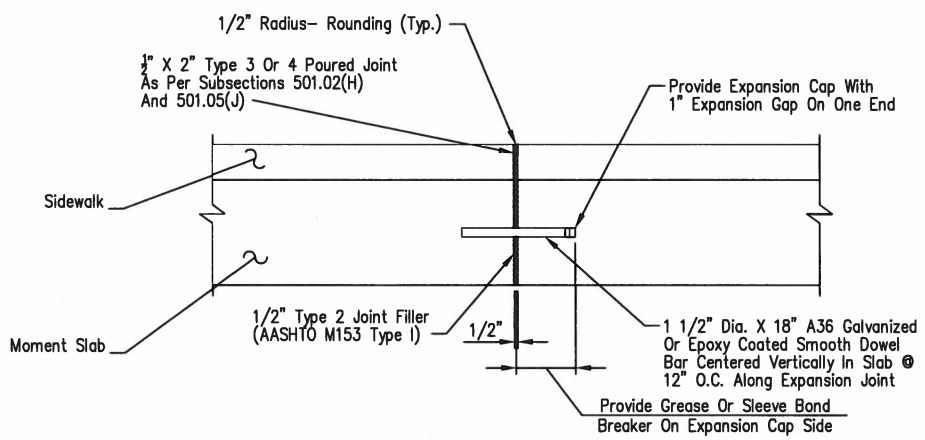

EXPANSION JOINT DETAIL

No Scale

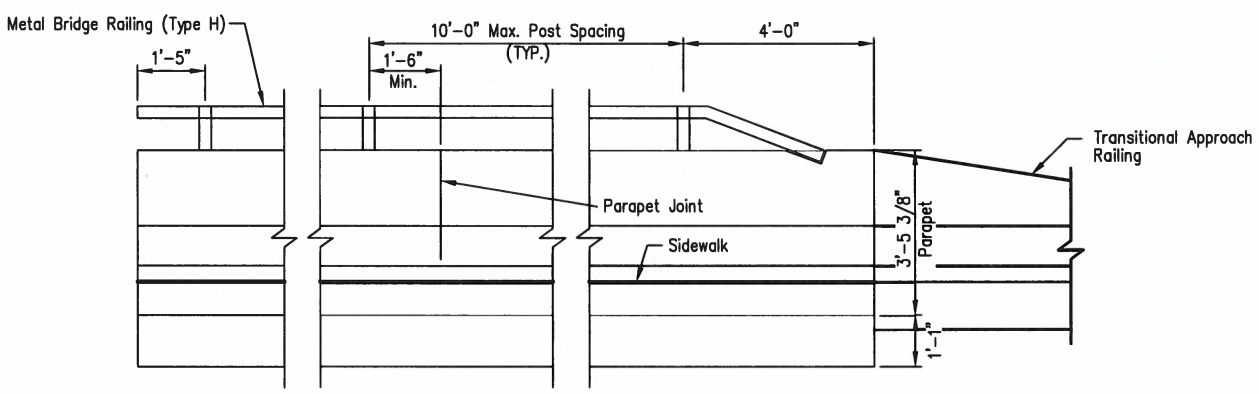

NOTE:
For details for the Metal Bridge Railing (Type H), see sheet 53

ELEVATION - METAL BRIDGE RAILING (TYPE H)

(Looking At Front Face Of Parapet)
Scale: 1" = 1'-0"

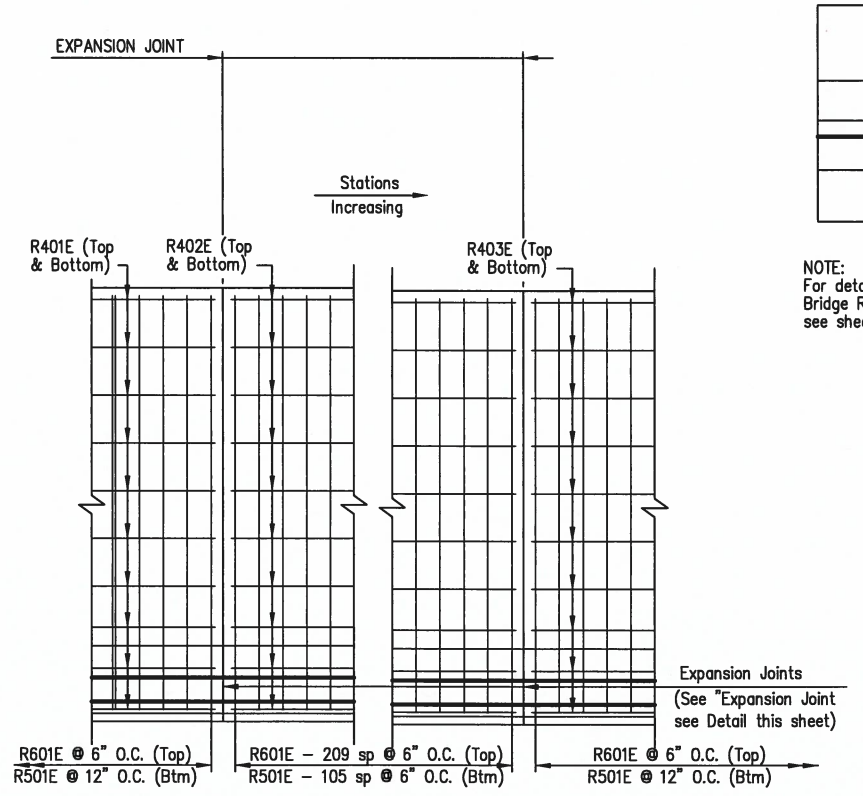

PLAN MOMENT SLAB - SOUTHEAST MSE WALL

BAR LIST

MARK	NO. REQ'D	LENGTH	P.D.
R401E	63	41'-5"	Str.
R402E	63	36'-7"	Str.
R403E	63	35'-5"	Str.
R501EE	333	8'-9"	Str.
R601EE	663	10'-9"	4 1/2"
P401E	663	6'-8"	3"
P403EE	9	19'-8"	Str.
P404E	180	14'-8"	Str.
P406E	9	11'-1"	Str.
P407E	114	3'-10"	Str.
P501E	663	6'-5"	3 3/4"

BAR BENDING DIAGRAMS

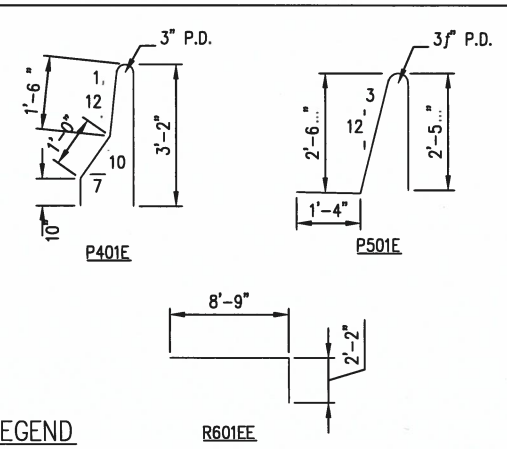

LEGEND

EF = Each Face

NOTE:
Dimensions of bars in "BAR BENDING DIAGRAMS" are out-to-out.

MEHLBURGER BRAWLEY
10 N. SHACKLEFORD PLAZA, SUITE 100
LITTLE ROCK, ARKANSAS 72211
(501) 375-5331 - FAX (501) 398-6481
CA # 2532 EXPIRES 12/31/17

STATE OF ARKANSAS
LICENSED PROFESSIONAL ENGINEER
No. 13365
Leon Dale Burke, Jr.
6/13/17
BRIDGE ENGINEER

SHEET 5 OF 7
DETAILS OF MSE (SOUTHEAST) RETAINING WALL
ROUTE SEC.
CITY OF LITTLE ROCK
LITTLE ROCK, ARK

DRAWN BY: CDP DATE: 10/22/15
CHECKED BY: DB DATE: 10/22/15
DESIGNED BY: MB DATE: 10/22/15
FILENAME: MSE 5 OF 7 WALL DTL(SE)
SCALE: 1/2" = 1'-0"
BRIDGE NO. — DRAWING NO.

DATE REVISED	DATE FILMED	DATE REVISED	DATE FILMED	FED. ROAD DIST. NO.	STATE	FED. AID PROJ. NO.	SHEET NO.	TOTAL SHEETS
10/22/15		1/16/17		6	AR			
2/19/16		6/13/17		JOB. NO.		060907	56	73
5/19/16								

(1) MSE (NW) RETAINING WALL DETAILS

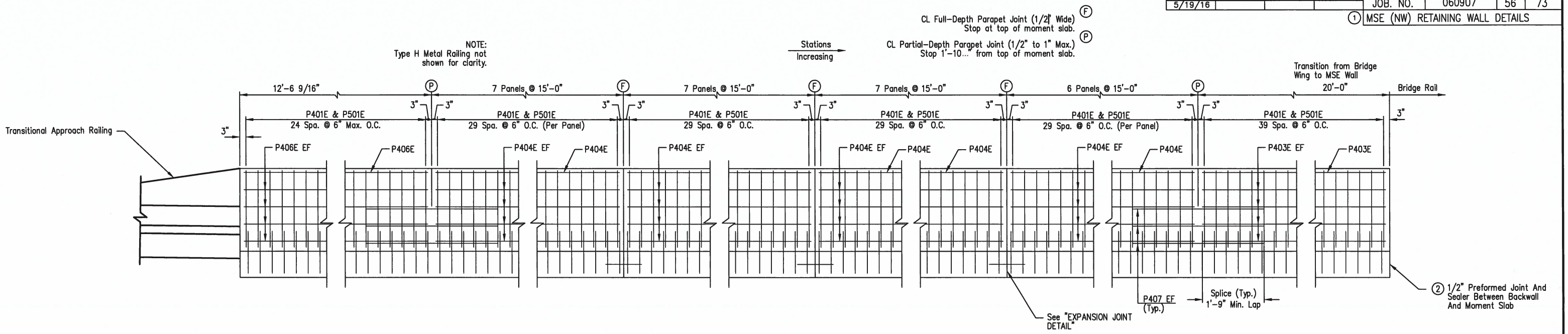

NOTES:
For moment slab reinforcing details, see sheet 53

* Measured at inside face of parapet

** Temporary drain opening shall be filled with concrete when sidewalk is constructed.

(2) Use 1/2" Preformed Joint AASHTO M153 Type 1 and 1/2" x 1" Type 3 or 4 Joint Sealer. See Subsections 501.02(h) and 501.05(j)

PARAPET REINFORCING DETAILS

(Looking At Front Face Of Parapet)
Scale: 1/2" = 1'-0"

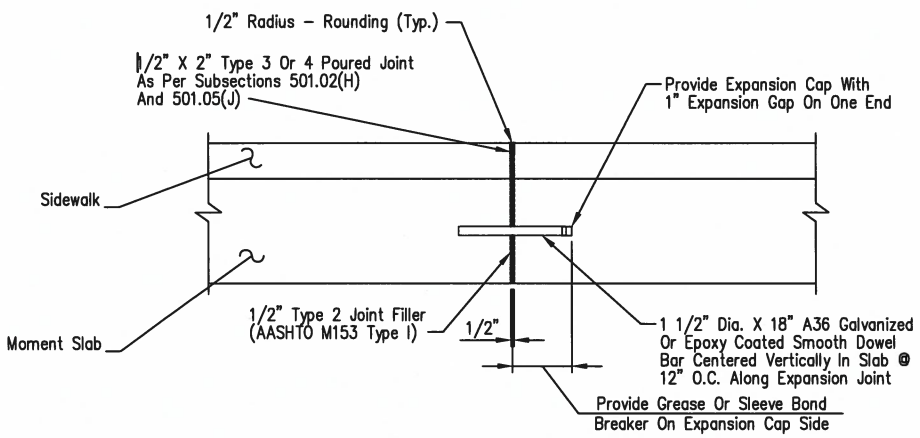

EXPANSION JOINT DETAIL

No Scale

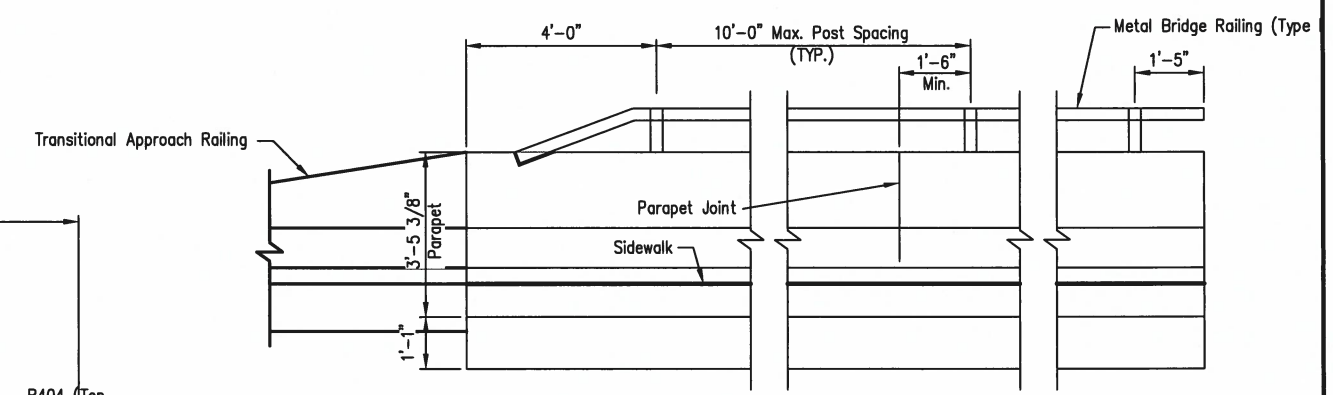

NOTE:
For details Metal Bridge Railing (Type H), see sheet 53

ELEVATION - METAL BRIDGE RAILING (TYPE H)

(Looking At Front Face Of Parapet)
Scale: 1" = 1'-0"

BAR LIST

MARK	NO. REQ'D	LENGTH	P.D.
R401E	63	40'-1"	Str.
R402E	63	36'-7"	Str.
R403E	63	36'-7"	Str.
R404E	63	38'-1"	Str.
R501E	440	8'-9"	Str.
R601E	875	10'-9"	4 1/2"
P401E	875	6'-8"	3"
P403E	9	19'-8"	Str.
P404E	247	14'-8"	Str.
P406E	9	12'-2"	Str.
P407E	150	3'-10"	Str.
P501E	875	6'-5"	3 3/4"

BAR BENDING DIAGRAMS

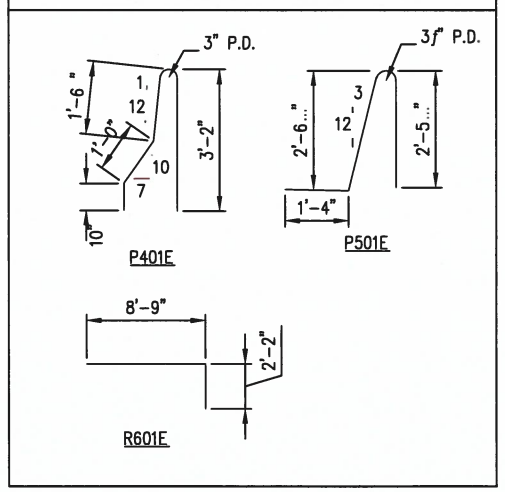

NOTE:
Dimensions of bars in "BAR BENDING DIAGRAMS" are out-to-out.

LEGEND

EF = Each Face

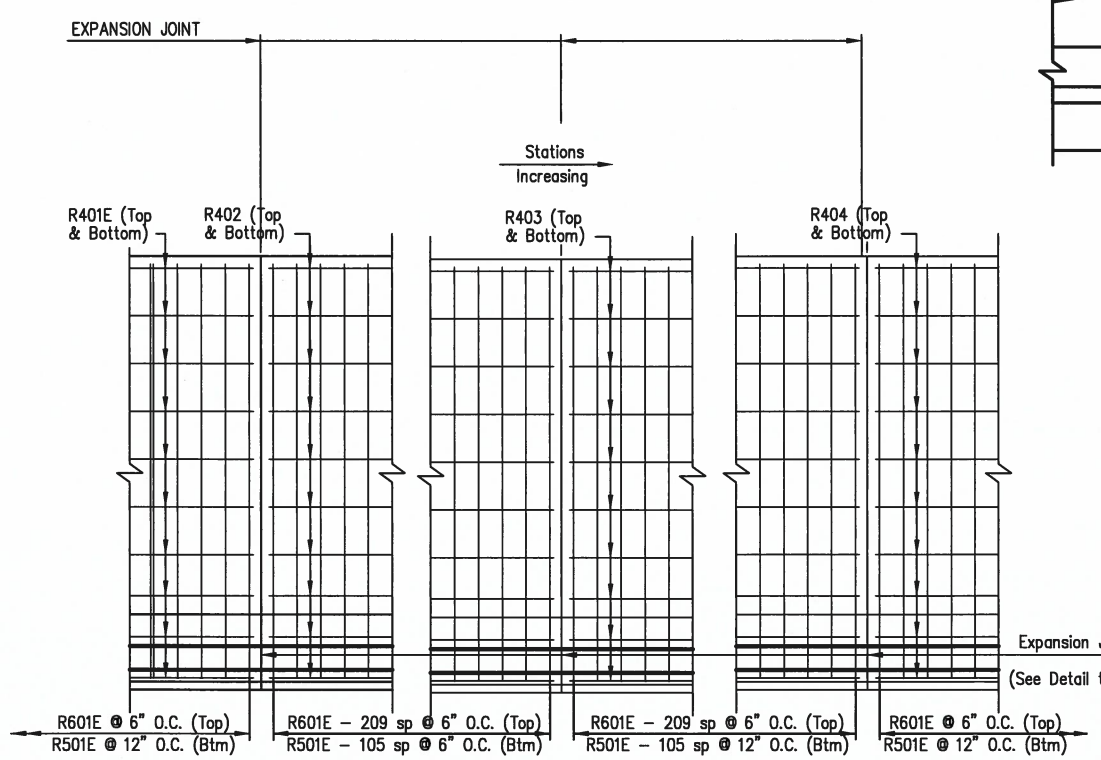

PLAN MOMENT SLAB - NORTHWEST MSE WALL

NOTE:
For details Metal Bridge Railing (Type H), see sheet 53

MEHLBURGER BRAWLEY
10 N. SHACKLEFORD PLAZA, SUITE 100
LITTLE ROCK, ARKANSAS 72211
(501) 375-5331 - FAX (501) 398-6481
CA # 2532 EXPIRES 12/31/17

STATE OF ARKANSAS
LICENSED PROFESSIONAL ENGINEER
No. 15363
Leon Dale Burke, Jr.
6/13/17
BRIDGE ENGINEER

SHEET 6 OF 7
DETAILS OF MSE (NORTHWEST) RETAINING WALL
ROUTE SEC.
CITY OF LITTLE ROCK
LITTLE ROCK, ARK

DRAWN BY: CDP DATE: 10/22/15
CHECKED BY: DB DATE: 10/22/15
DESIGNED BY: MB DATE: 10/22/15
FILENAME: MSE 6 OF 7 WALL DTL(NW)
SCALE: 1/2" = 1'-0"
BRIDGE NO. — DRAWING NO.

DATE REVISED	DATE FILMED	DATE REVISED	DATE FILMED	FED. ROAD DIST. NO.	STATE	FED. AID PROJ. NO.	SHEET NO.	TOTAL SHEETS
10/22/15		1/16/17		6	AR			
2/19/16		6/13/17		JOB. NO.		060907	57	67
5/19/16								

(1) MSE (NE) RETAINING WALL DETAILS

NOTE:
Metal Bridge Railing (Type H) not shown for clarity.

Stations Increasing

(F) CL Full-Depth Parapet Joint (1/2" Wide) Stop at top of moment slab.

(P) CL Partial-Depth Parapet Joint (1/2" to 1" Max.) Stop 1'-10..." from top of moment slab.

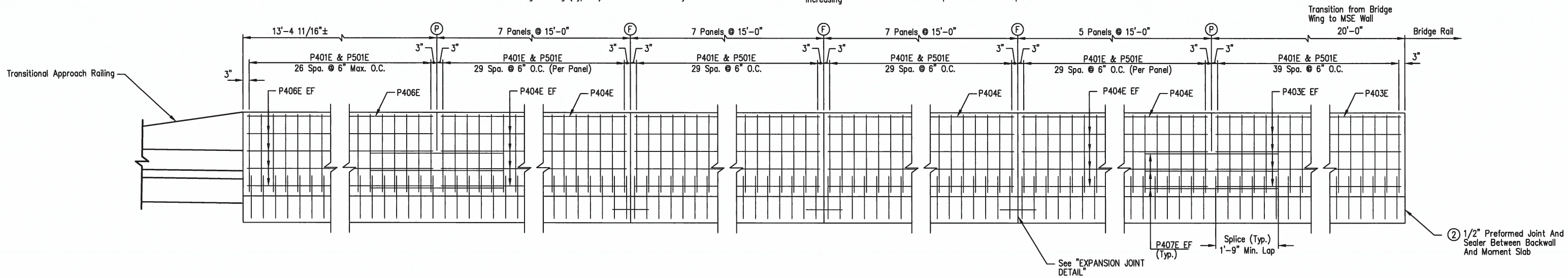

NOTES:
For moment slab reinforcing details, see sheet 53.

PARAPET REINFORCING DETAILS

(Looking At Front Face Of Parapet)
Scale: 1/2" = 1'-0"

* Measured at inside face of parapet

** Temporary drain opening shall be filled with concrete when sidewalk is constructed.

(2) Use 1/2" Preformed Joint AASHTO M153 Type 1 and 1/2" x 1" Type 3 or 4 Joint Sealer. See Subsections 501.02(h) and 501.05(j)

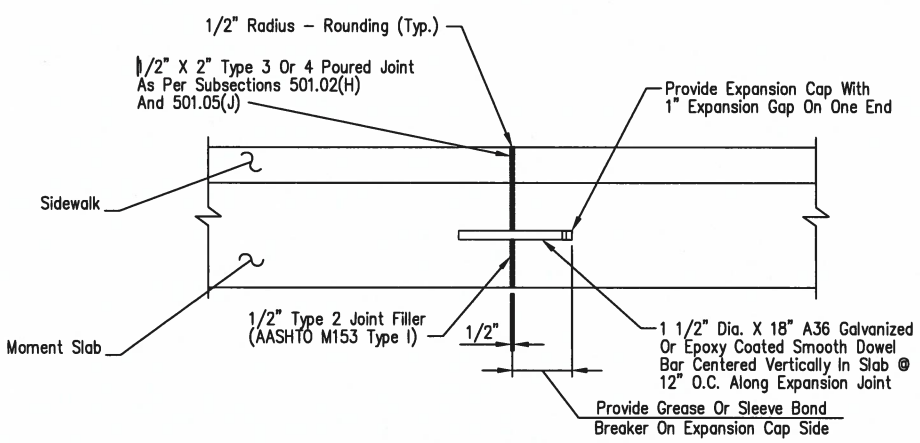

EXPANSION JOINT DETAIL

No Scale

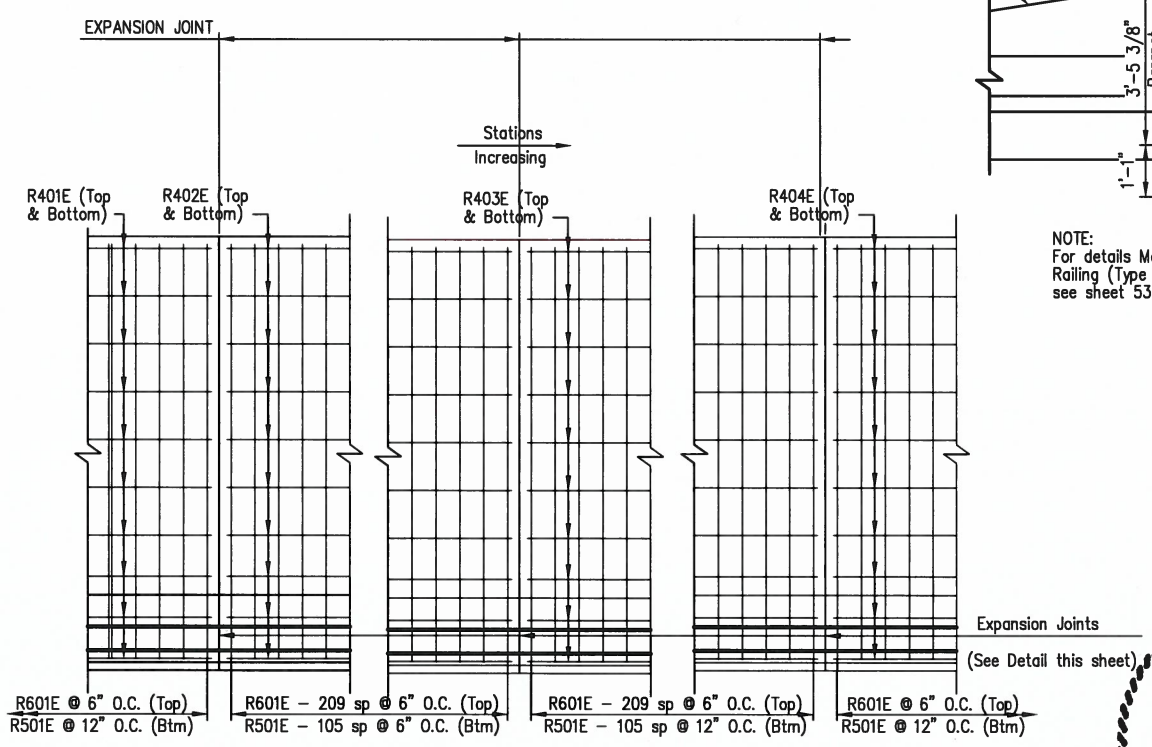

PLAN MOMENT SLAB – NORTHEAST MSE WALL

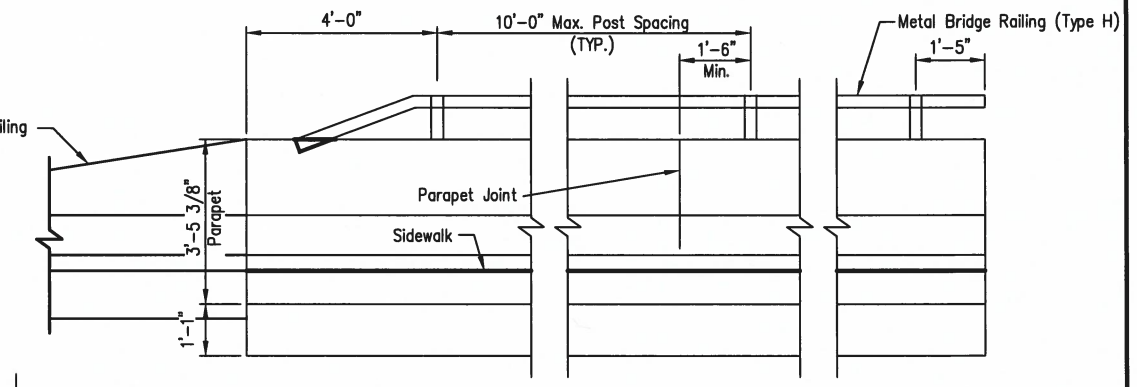

NOTE:
For details Metal Bridge Railing (Type H), see sheet 53

ELEVATION – METAL BRIDGE RAILING (TYPE H)

(Looking At Front Face Of Parapet)
Scale: 1" = 1'-0"

BAR LIST

MARK	NO. REQ'D	LENGTH	P.D.
R401E	63	41'-1"	Str.
R402E	63	36'-7"	Str.
R403E	63	36'-7"	Str.
R404E	63	33'-3"	Str.
R501E	426	8'-9"	Str.
R601E	847	10'-9"	4 1/2"
P401E	847	6'-8"	3"
P403E	9	19'-8"	Str.
P404E	234	14'-8"	Str.
P406E	9	13'-0"	Str.
P407E	144	3'-10"	Str.
P501E	847	6'-5"	3 3/4"

BAR BENDING DIAGRAMS

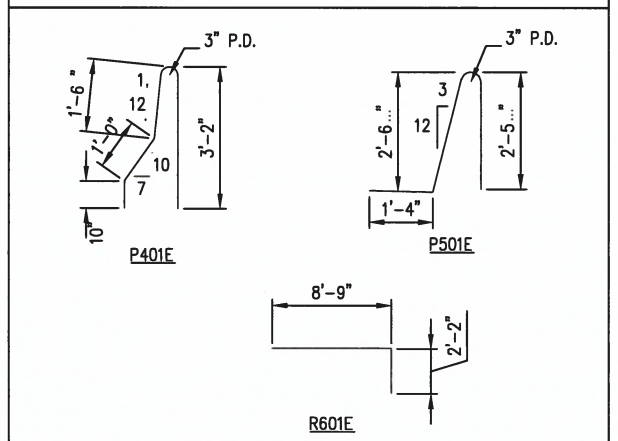

NOTE:
Dimensions of bars in "BAR BENDING DIAGRAMS" are out-to-out.

LEGEND

EF = Each Face

MEHLBURGER BRAWLEY
10 N. SHACKLEFORD PLAZA, SUITE 100
LITTLE ROCK, ARKANSAS 72211
(501) 375-5331 - FAX (501) 398-6481
CA # 2532 EXPIRES 12/31/17

STATE OF ARKANSAS ★★★ LICENSED PROFESSIONAL ENGINEER ★★★ No. 13365 Leon Dale Burke, Jr.
6/13/17
BRIDGE ENGINEER

SHEET 7 OF 7
DETAILS OF MSE (NORTHEAST) RETAINING WALL
ROUTE SEC.
CITY OF LITTLE ROCK
LITTLE ROCK, ARK

DRAWN BY: CDP DATE: 10/22/15
CHECKED BY: DB DATE: 10/22/15
DESIGNED BY: MB DATE: 10/22/15
FILENAME: MSE 7 OF 7 WALL DTL(NE)
SCALE: 1/2" = 1'-0"
BRIDGE NO. – DRAWING NO.

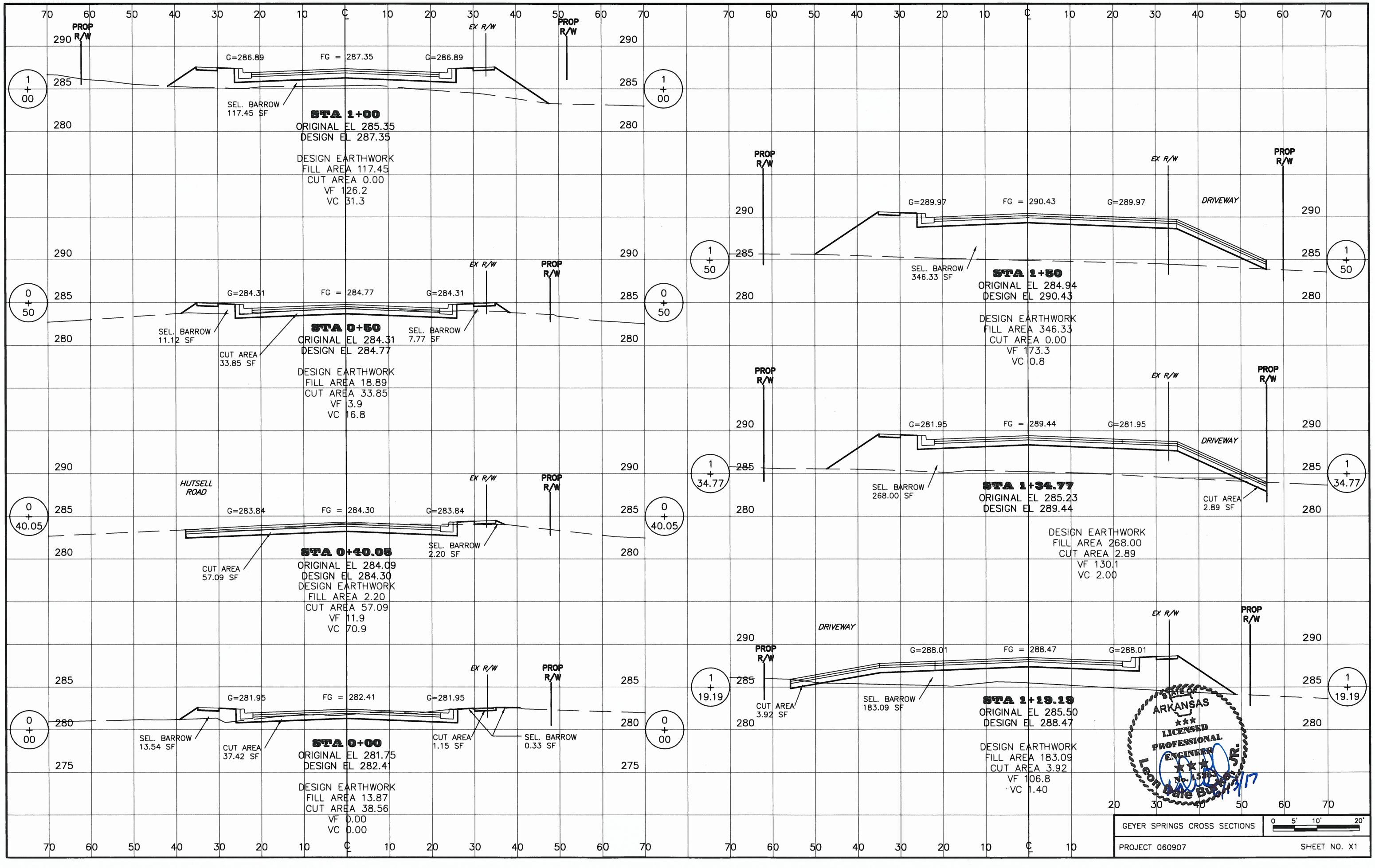
PROP R/W
EX R/W
G=286.89
FG = 287.35
G=286.89
SEL. BARROW 117.45 SF
STA 1+00
ORIGINAL EL 285.35
DESIGN EL 287.35
DESIGN EARTHWORK
FILL AREA 117.45
CUT AREA 0.00
VF 126.2
VC 31.3
G=284.31
FG = 284.77
G=284.31
SEL. BARROW 11.12 SF
CUT AREA 33.85 SF
SEL. BARROW 7.77 SF
STA 0+50
ORIGINAL EL 284.31
DESIGN EL 284.77
DESIGN EARTHWORK
FILL AREA 18.89
CUT AREA 33.85
VF 3.9
VC 16.8
HUTSELL ROAD
G=283.84
FG = 284.30
G=283.84
CUT AREA 57.09 SF
SEL. BARROW 2.20 SF
STA 0+40.05
ORIGINAL EL 284.09
DESIGN EL 284.30
DESIGN EARTHWORK
FILL AREA 2.20
CUT AREA 57.09
VF 11.9
VC 70.9
G=281.95
FG = 282.41
G=281.95
SEL. BARROW 13.54 SF
CUT AREA 37.42 SF
CUT AREA 1.15 SF
SEL. BARROW 0.33 SF
STA 0+00
ORIGINAL EL 281.75
DESIGN EL 282.41
DESIGN EARTHWORK
FILL AREA 13.87
CUT AREA 38.56
VF 0.00
VC 0.00
DRIVEWAY
G=289.97
FG = 290.43
G=289.97
SEL. BARROW 346.33 SF
STA 1+50
ORIGINAL EL 284.94
DESIGN EL 290.43
DESIGN EARTHWORK
FILL AREA 346.33
CUT AREA 0.00
VF 173.3
VC 0.8
G=281.95
FG = 289.44
G=281.95
SEL. BARROW 268.00 SF
CUT AREA 2.89 SF
STA 1+34.77
ORIGINAL EL 285.23
DESIGN EL 289.44
DESIGN EARTHWORK
FILL AREA 268.00
CUT AREA 2.89
VF 130.1
VC 2.00
G=288.01
FG = 288.47
G=288.01
CUT AREA 3.92 SF
SEL. BARROW 183.09 SF
STA 1+19.19
ORIGINAL EL 285.50
DESIGN EL 288.47
DESIGN EARTHWORK
FILL AREA 183.09
CUT AREA 3.92
VF 106.8
VC 1.40
STATE OF ARKANSAS
LICENSED PROFESSIONAL ENGINEER
Leon Dale Burkett, Jr.
1/13/17
GEYER SPRINGS CROSS SECTIONS
0 5' 10' 20'
PROJECT 060907
SHEET NO. X1

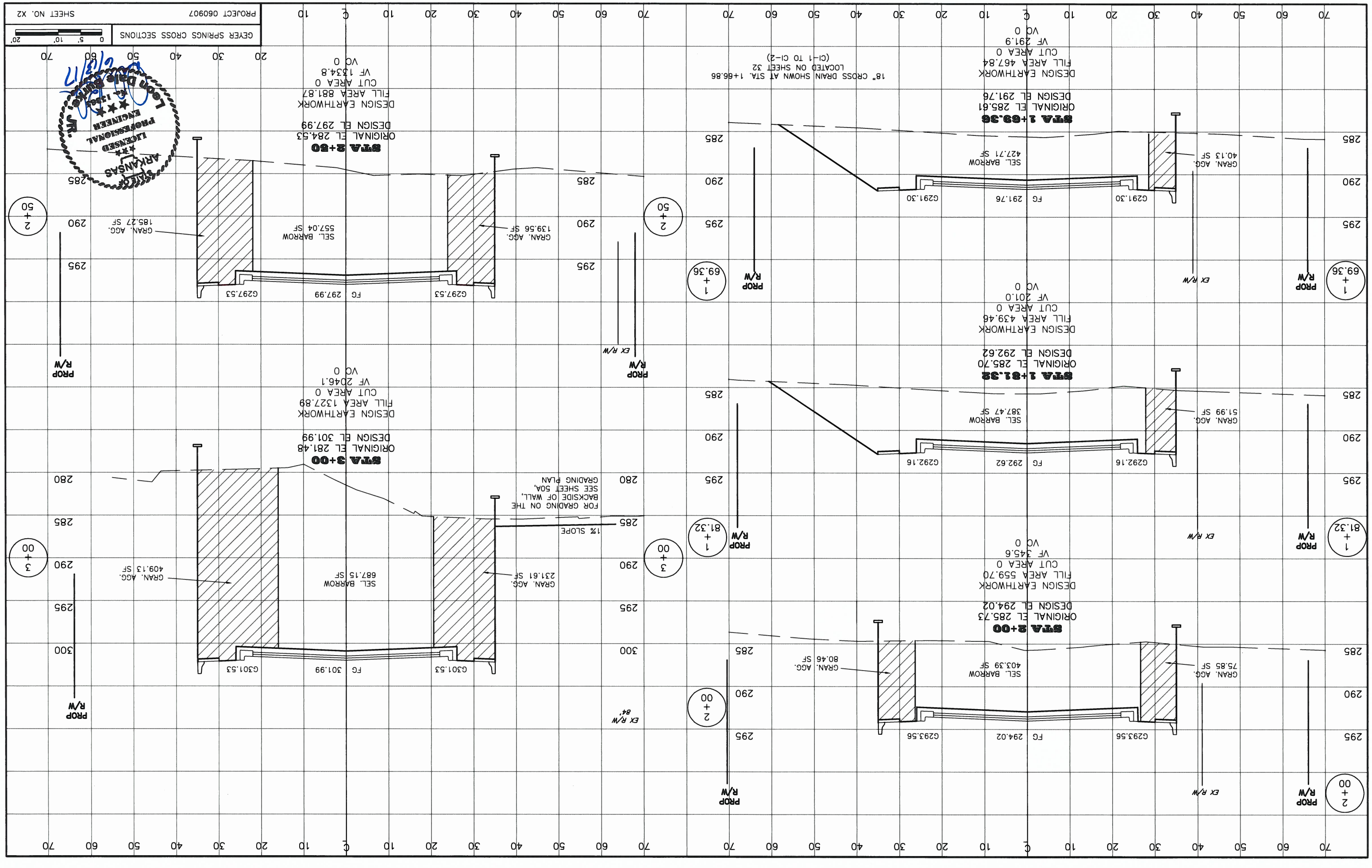
STA 2+00
ORIGINAL EL 285.73
DESIGN EL 294.02
DESIGN EARTHWORK
FILL AREA 559.70
CUT AREA 0
VF 345.6
VC 0
STA 1+81.32
ORIGINAL EL 285.70
DESIGN EL 292.62
DESIGN EARTHWORK
FILL AREA 439.46
CUT AREA 0
VF 201.0
VC 0
STA 1+69.36
ORIGINAL EL 285.61
DESIGN EL 291.76
DESIGN EARTHWORK
FILL AREA 467.84
CUT AREA 0
VF 291.9
VC 0
18" CROSS DRAIN SHOWN AT STA. 1+66.86
LOCATED ON SHEET 32
(CI-1 TO CI-2)
STA 3+00
ORIGINAL EL 281.48
DESIGN EL 301.99
DESIGN EARTHWORK
FILL AREA 1327.89
CUT AREA 0
VF 2046.1
VC 0
STA 2+50
ORIGINAL EL 284.53
DESIGN EL 297.99
DESIGN EARTHWORK
FILL AREA 881.87
CUT AREA 0
VF 1534.8
VC 0
FOR GRADING ON THE
BACKSIDE OF WALL,
SEE SHEET 50A,
GRADING PLAN
1% SLOPE
PROP R/W
EX R/W
EX R/W 84'
GRAN. AGG. 75.85 SF
SEL. BARROW 403.39 SF
GRAN. AGG. 80.46 SF
G293.56
FG 294.02
G293.56
GRAN. AGG. 51.99 SF
SEL. BARROW 387.47 SF
G292.16
FG 292.62
G292.16
GRAN. AGG. 40.13 SF
SEL. BARROW 427.71 SF
G291.30
FG 291.76
G291.30
GRAN. AGG. 139.56 SF
SEL. BARROW 557.04 SF
GRAN. AGG. 231.61 SF
SEL. BARROW 687.15 SF
GRAN. AGG. 409.13 SF
GRAN. AGG. 185.27 SF
G301.53
FG 301.99
G301.53
G297.53
FG 297.99
G297.53
2 + 00
1 + 69.36
1 + 81.32
2 + 50
3 + 00
285
290
295
300
280
70 60 50 40 30 20 10 ℄ 10 20 30 40 50 60 70
GEYER SPRINGS CROSS SECTIONS
0 5' 10' 20'
PROJECT 060907
SHEET NO. X2
STATE OF ARKANSAS
LICENSED
PROFESSIONAL
ENGINEER
Leon Dale Barnes Jr.
No. 13506
6/13/17

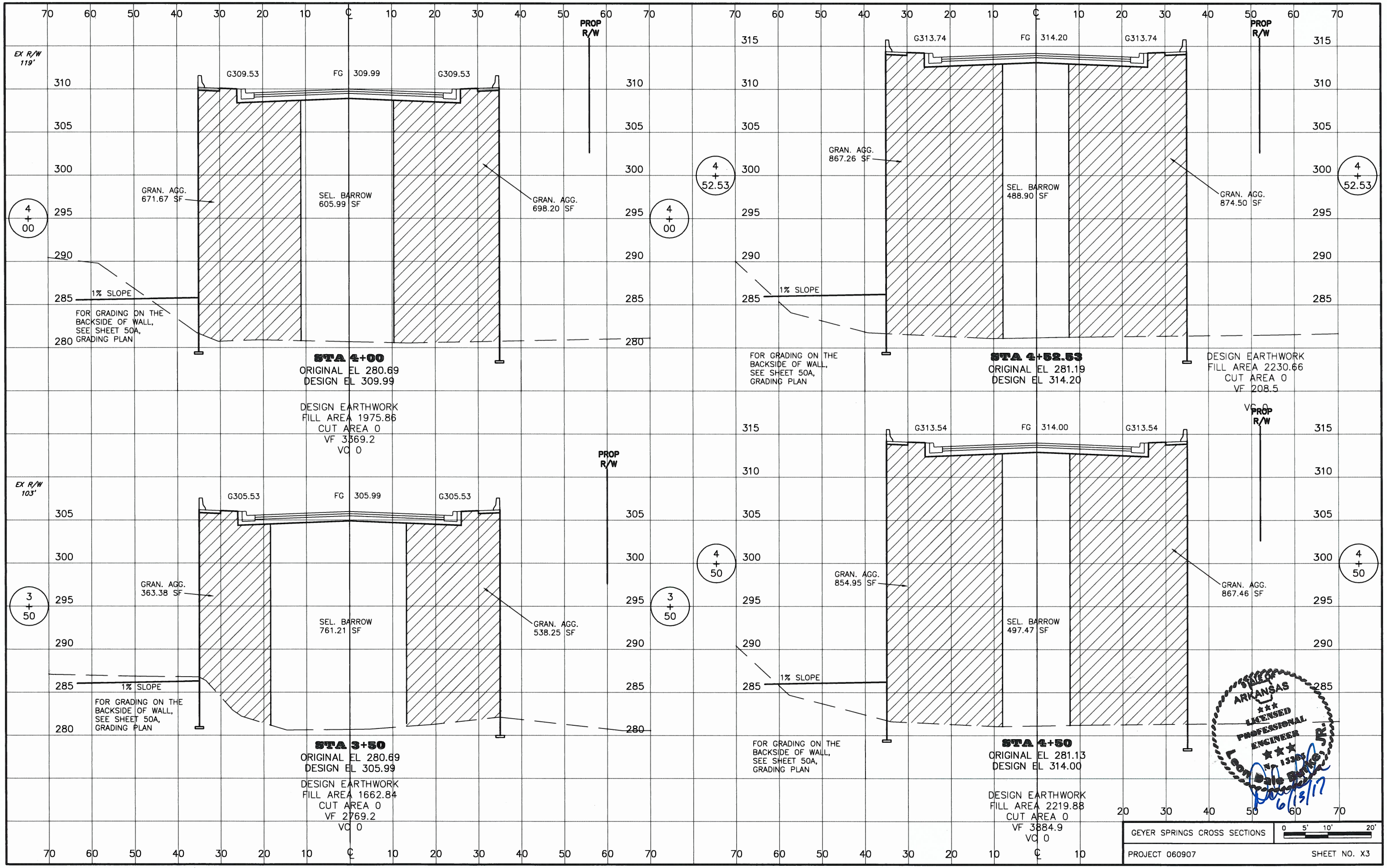
EX R/W 119'
G309.53
FG 309.99
G309.53
PROP R/W
GRAN. AGG. 671.67 SF
SEL. BARROW 605.99 SF
GRAN. AGG. 698.20 SF
4 + 00
1% SLOPE
FOR GRADING ON THE BACKSIDE OF WALL, SEE SHEET 50A, GRADING PLAN
STA 4+00
ORIGINAL EL 280.69
DESIGN EL 309.99
DESIGN EARTHWORK
FILL AREA 1975.86
CUT AREA 0
VF 3369.2
VC 0
G313.74
FG 314.20
G313.74
GRAN. AGG. 867.26 SF
SEL. BARROW 488.90 SF
GRAN. AGG. 874.50 SF
4 + 52.53
FOR GRADING ON THE BACKSIDE OF WALL, SEE SHEET 50A, GRADING PLAN
STA 4+52.53
ORIGINAL EL 281.19
DESIGN EL 314.20
DESIGN EARTHWORK
FILL AREA 2230.66
CUT AREA 0
VF 208.5
VC 0
EX R/W 103'
G305.53
FG 305.99
G305.53
GRAN. AGG. 363.38 SF
SEL. BARROW 761.21 SF
GRAN. AGG. 538.25 SF
3 + 50
STA 3+50
ORIGINAL EL 280.69
DESIGN EL 305.99
DESIGN EARTHWORK
FILL AREA 1662.84
CUT AREA 0
VF 2769.2
VC 0
G313.54
FG 314.00
G313.54
GRAN. AGG. 854.95 SF
SEL. BARROW 497.47 SF
GRAN. AGG. 867.46 SF
4 + 50
STA 4+50
ORIGINAL EL 281.13
DESIGN EL 314.00
DESIGN EARTHWORK
FILL AREA 2219.88
CUT AREA 0
VF 3884.9
VC 0
STATE OF ARKANSAS
LICENSED PROFESSIONAL ENGINEER
Leon Dale Burks, Jr.
No. 13265
6/13/17
GEYER SPRINGS CROSS SECTIONS
0 5' 10' 20'
PROJECT 060907
SHEET NO. X3

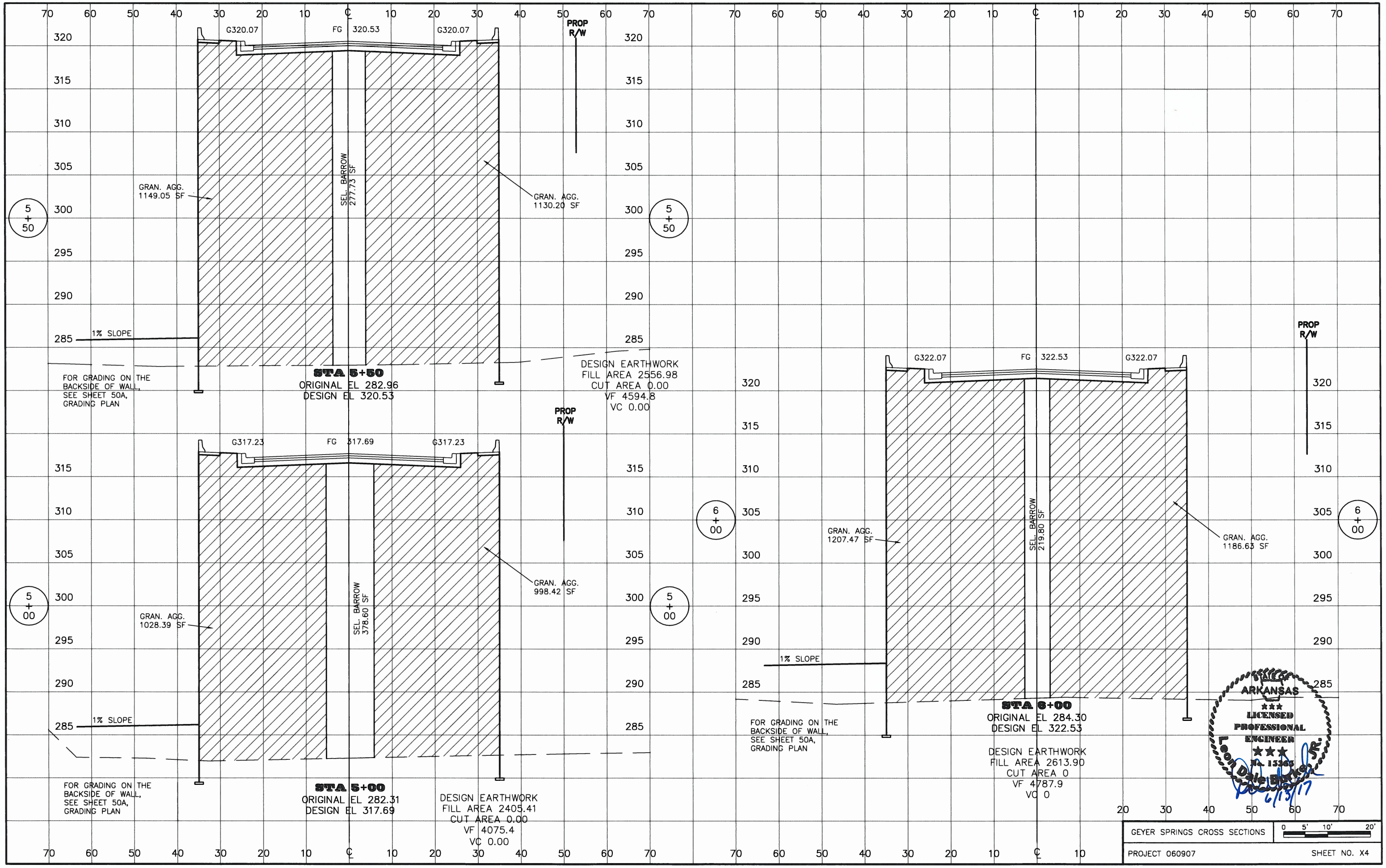
G320.07
FG 320.53
G320.07
PROP R/W
GRAN. AGG. 1149.05 SF
SEL. BARROW 277.73 SF
GRAN. AGG. 1130.20 SF
5 + 50
1% SLOPE
FOR GRADING ON THE BACKSIDE OF WALL, SEE SHEET 50A, GRADING PLAN
STA 5+50
ORIGINAL EL 282.96
DESIGN EL 320.53
DESIGN EARTHWORK
FILL AREA 2556.98
CUT AREA 0.00
VF 4594.8
VC 0.00
G317.23
FG 317.69
G317.23
GRAN. AGG. 1028.39 SF
SEL. BARROW 378.60 SF
GRAN. AGG. 998.42 SF
5 + 00
1% SLOPE
FOR GRADING ON THE BACKSIDE OF WALL, SEE SHEET 50A, GRADING PLAN
STA 5+00
ORIGINAL EL 282.31
DESIGN EL 317.69
DESIGN EARTHWORK
FILL AREA 2405.41
CUT AREA 0.00
VF 4075.4
VC 0.00
G322.07
FG 322.53
G322.07
PROP R/W
6 + 00
GRAN. AGG. 1207.47 SF
SEL. BARROW 219.80 SF
GRAN. AGG. 1186.63 SF
1% SLOPE
FOR GRADING ON THE BACKSIDE OF WALL, SEE SHEET 50A, GRADING PLAN
STA 6+00
ORIGINAL EL 284.30
DESIGN EL 322.53
DESIGN EARTHWORK
FILL AREA 2613.90
CUT AREA 0
VF 4787.9
VC 0
STATE OF ARKANSAS
LICENSED PROFESSIONAL ENGINEER
No. 13365
6/13/17
GEYER SPRINGS CROSS SECTIONS
0 5' 10' 20'
PROJECT 060907
SHEET NO. X4

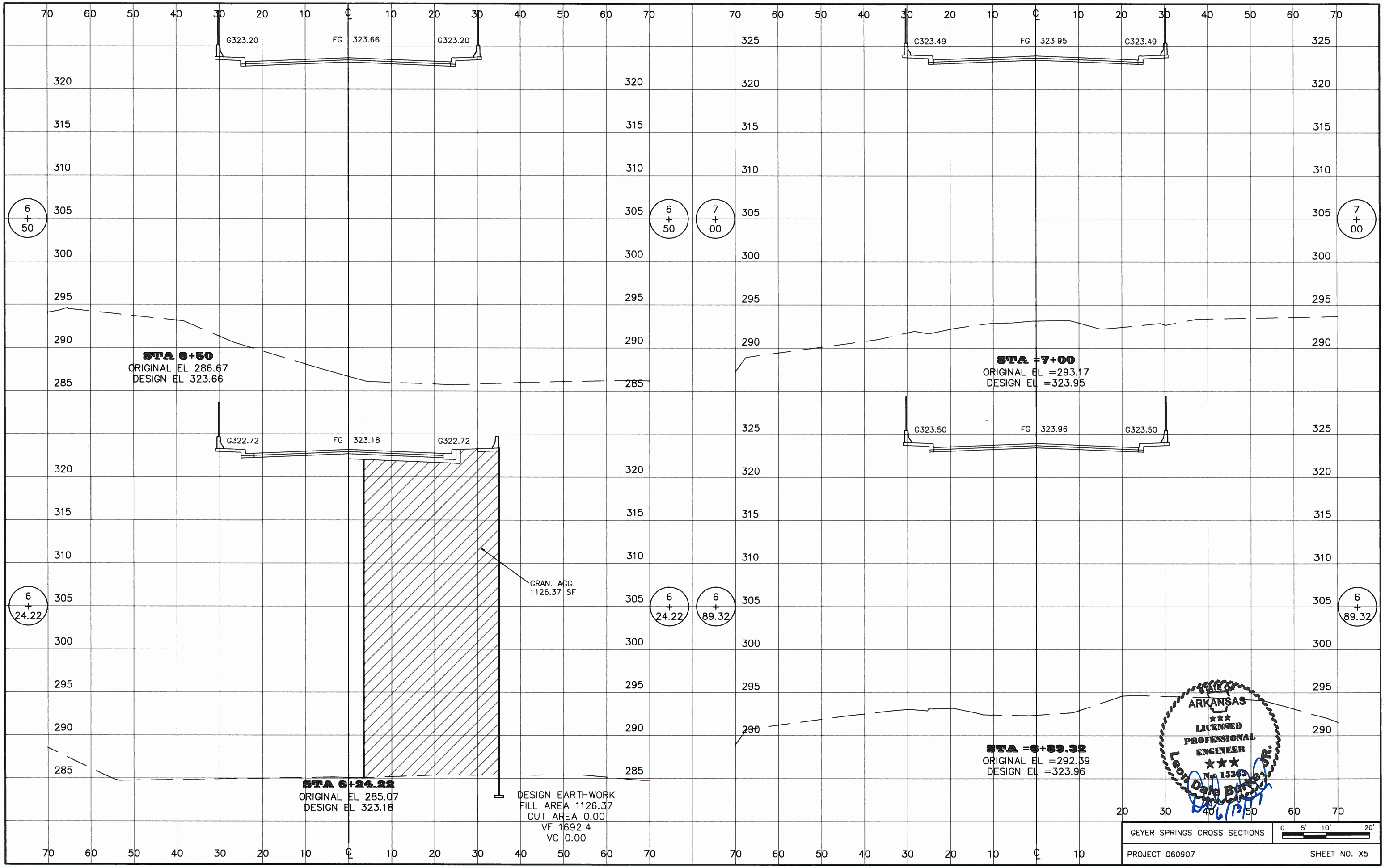
G323.20
FG 323.66
G323.20
G323.49
FG 323.95
G323.49
6 + 50
7 + 00
STA 6+50
ORIGINAL EL 286.67
DESIGN EL 323.66
STA =7+00
ORIGINAL EL =293.17
DESIGN EL =323.95
G322.72
FG 323.18
G322.72
G323.50
FG 323.96
G323.50
GRAN. AGG.
1126.37 SF
6 + 24.22
6 + 89.32
STA 6+24.22
ORIGINAL EL 285.07
DESIGN EL 323.18
DESIGN EARTHWORK
FILL AREA 1126.37
CUT AREA 0.00
VF 1692.4
VC 0.00
STA =6+89.32
ORIGINAL EL =292.39
DESIGN EL =323.96
STATE OF ARKANSAS
LICENSED PROFESSIONAL ENGINEER
No. 13343
Leon Dale Burke, JR.
6/13/13
GEYER SPRINGS CROSS SECTIONS
0 5' 10' 20'
PROJECT 060907
SHEET NO. X5

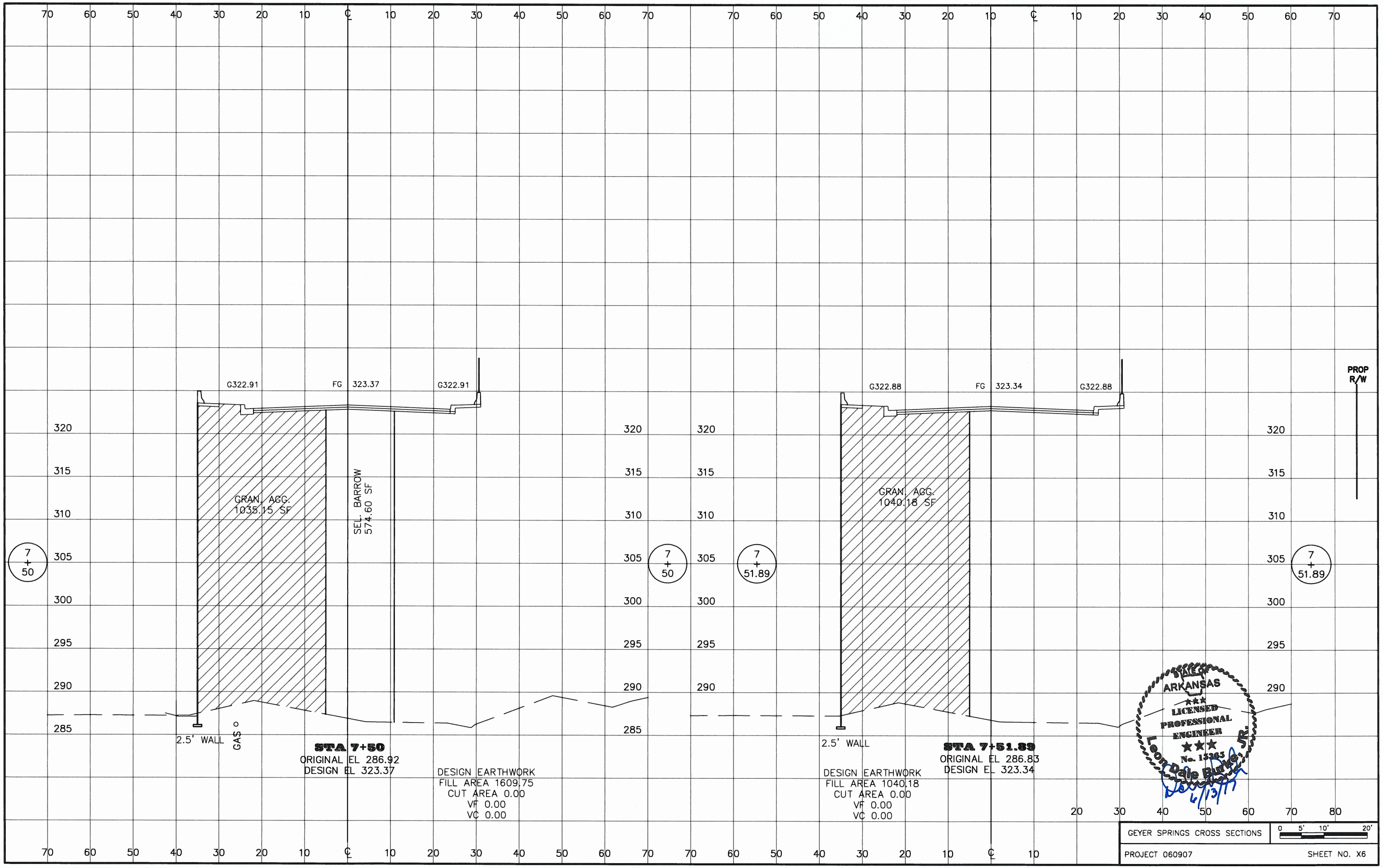

GEYER SPRINGS CROSS SECTIONS

0 5' 10' 20'

PROJECT 060907

SHEET NO. X6

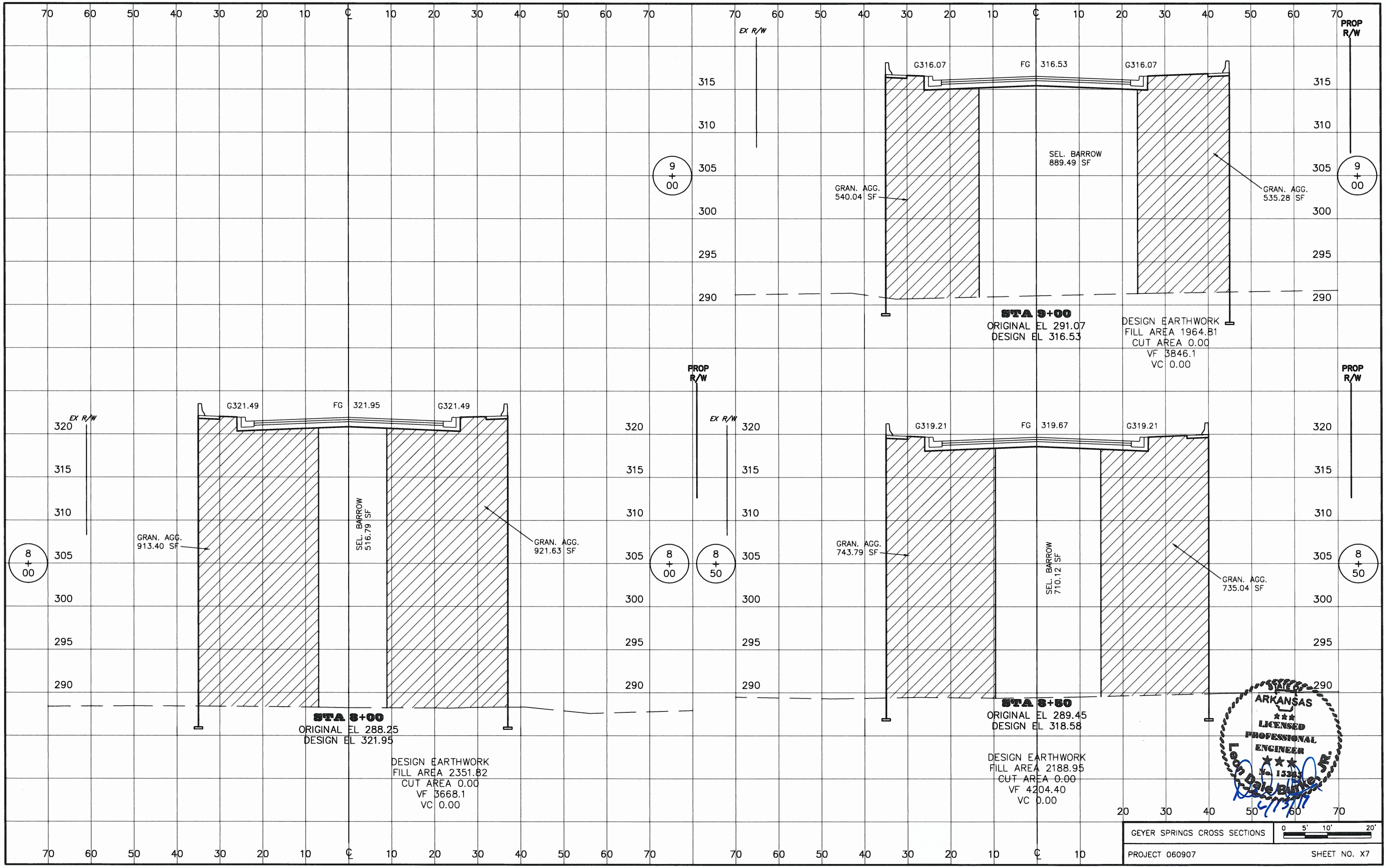
EX R/W
PROP R/W
G316.07
FG 316.53
G316.07
SEL. BARROW 889.49 SF
GRAN. AGG. 540.04 SF
GRAN. AGG. 535.28 SF
9 + 00
STA 9+00
ORIGINAL EL 291.07
DESIGN EL 316.53
DESIGN EARTHWORK
FILL AREA 1964.81
CUT AREA 0.00
VF 3846.1
VC 0.00
G321.49
FG 321.95
G321.49
SEL. BARROW 516.79 SF
GRAN. AGG. 913.40 SF
GRAN. AGG. 921.63 SF
8 + 00
STA 8+00
ORIGINAL EL 288.25
DESIGN EL 321.95
DESIGN EARTHWORK
FILL AREA 2351.82
CUT AREA 0.00
VF 3668.1
VC 0.00
G319.21
FG 319.67
G319.21
SEL. BARROW 710.12 SF
GRAN. AGG. 743.79 SF
GRAN. AGG. 735.04 SF
8 + 50
STA 8+50
ORIGINAL EL 289.45
DESIGN EL 318.58
DESIGN EARTHWORK
FILL AREA 2188.95
CUT AREA 0.00
VF 4204.40
VC 0.00
STATE OF ARKANSAS
LICENSED PROFESSIONAL ENGINEER
No. 13383
Leon Dale Baker Jr.
5/13/11
GEYER SPRINGS CROSS SECTIONS
0 5' 10' 20'
PROJECT 060907
SHEET NO. X7

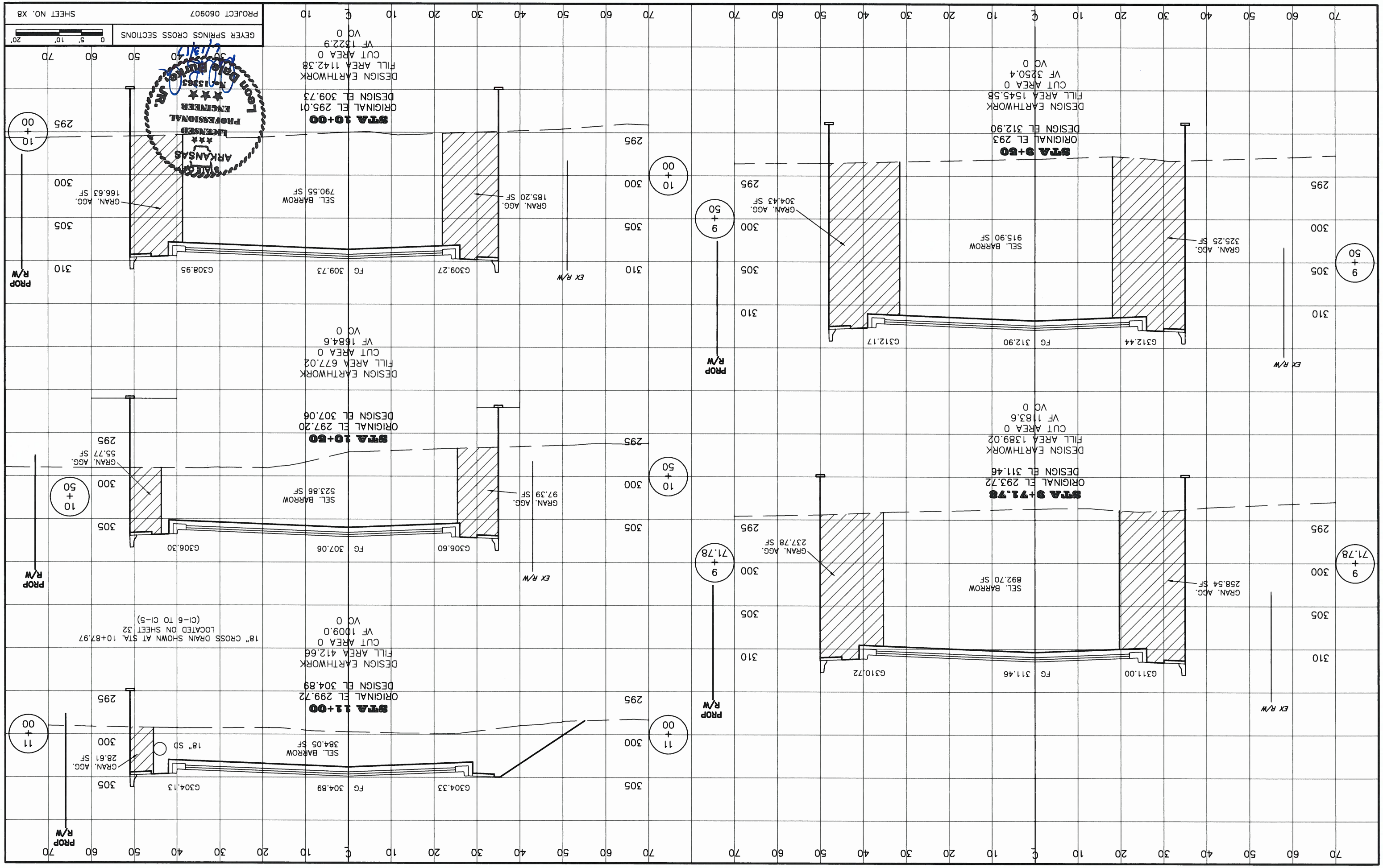
STA 9+71.78
ORIGINAL EL 293.72
DESIGN EL 311.46
DESIGN EARTHWORK
FILL AREA 1389.02
CUT AREA 0
VF 1183.6
VC 0
STA 9+50
ORIGINAL EL 293
DESIGN EL 312.90
DESIGN EARTHWORK
FILL AREA 1545.58
CUT AREA 0
VF 3250.4
VC 0
STA 10+50
ORIGINAL EL 297.20
DESIGN EL 307.06
DESIGN EARTHWORK
FILL AREA 677.02
CUT AREA 0
VF 1684.6
VC 0
STA 10+00
ORIGINAL EL 295.01
DESIGN EL 309.73
DESIGN EARTHWORK
FILL AREA 1142.38
CUT AREA 0
VF 1522.9
VC 0
STA 11+00
ORIGINAL EL 299.72
DESIGN EL 304.89
DESIGN EARTHWORK
FILL AREA 412.66
CUT AREA 0
VF 1009.0
VC 0
18" CROSS DRAIN SHOWN AT STA. 10+87.97
LOCATED ON SHEET 32
(CI-6 TO CI-5)
PROP R/W
EX R/W
SEL. BARROW
915.90 SF
GRAN. AGG.
325.25 SF
GRAN. AGG.
304.43 SF
SEL. BARROW
892.70 SF
GRAN. AGG.
258.54 SF
GRAN. AGG.
237.78 SF
SEL. BARROW
790.55 SF
GRAN. AGG.
185.20 SF
GRAN. AGG.
166.63 SF
SEL. BARROW
523.86 SF
GRAN. AGG.
97.39 SF
GRAN. AGG.
55.77 SF
SEL. BARROW
384.05 SF
GRAN. AGG.
28.61 SF
18" SD
G311.00
FG 311.46
G310.72
G312.44
FG 312.90
G312.17
G309.27
FG 309.73
G308.95
G306.60
FG 307.06
G306.30
G304.33
FG 304.89
G304.13
9 + 71.78
9 + 50
10 + 00
10 + 50
11 + 00
C
70 60 50 40 30 20 10 C 10 20 30 40 50 60 70
305 300 295 310
STATE OF ARKANSAS
LICENSED PROFESSIONAL ENGINEER
Leon Dale Burke Jr.
No. 11303
Leon Dale Burke Jr.
6/19/13
GEYER SPRINGS CROSS SECTIONS
0 5' 10' 20'
PROJECT 060907
SHEET NO. X8

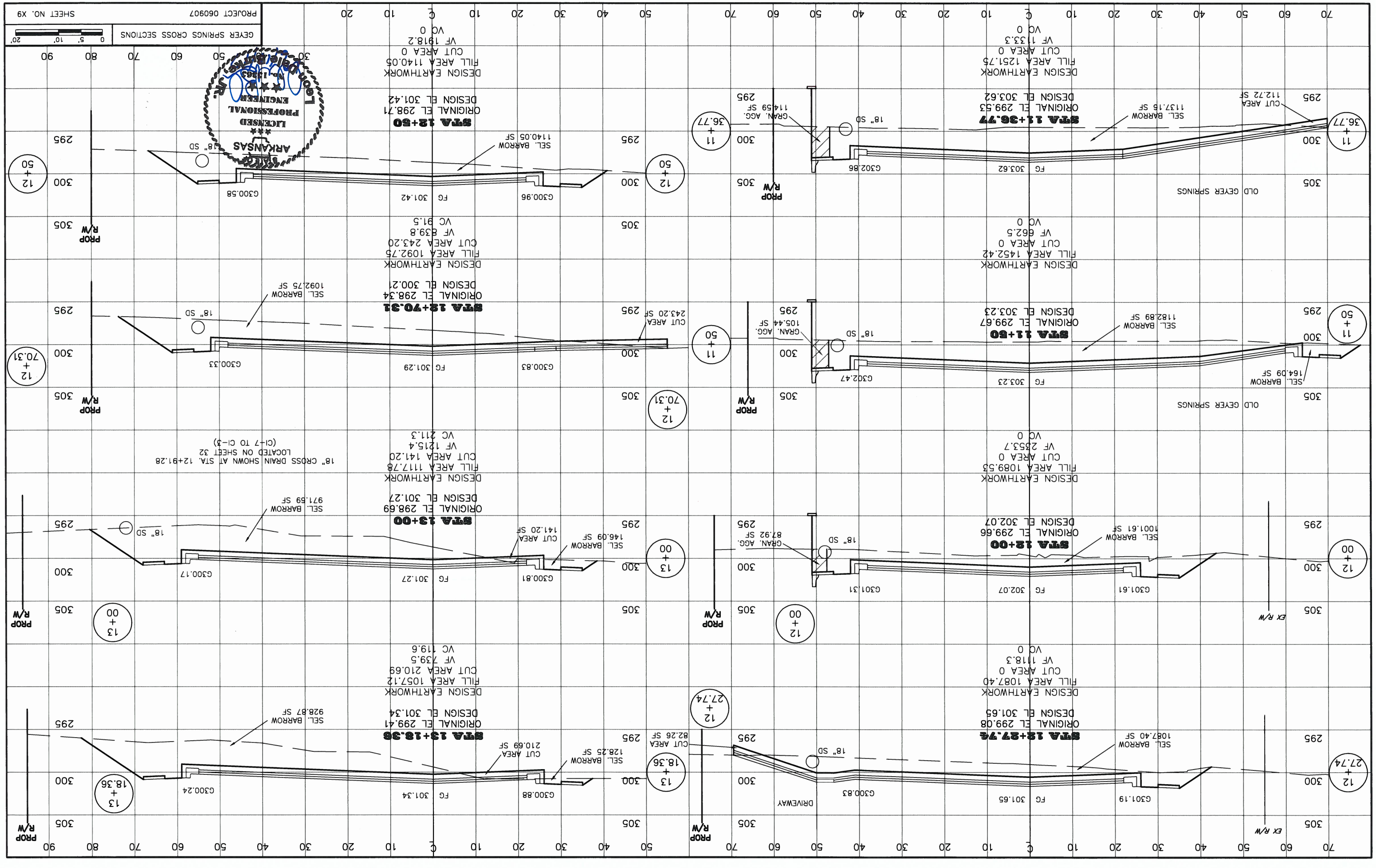
STA 12+27.74
ORIGINAL EL 299.08
DESIGN EL 301.65
DESIGN EARTHWORK
FILL AREA 1087.40
CUT AREA 0
VF 1118.3
VC 0
STA 12+00
ORIGINAL EL 299.66
DESIGN EL 302.07
DESIGN EARTHWORK
FILL AREA 1089.53
CUT AREA 0
VF 2353.7
VC 0
STA 11+36.77
ORIGINAL EL 299.53
DESIGN EL 303.62
DESIGN EARTHWORK
FILL AREA 1251.75
CUT AREA 0
VF 1133.3
VC 0
STA 11+50
ORIGINAL EL 299.67
DESIGN EL 303.23
DESIGN EARTHWORK
FILL AREA 1452.42
CUT AREA 0
VF 662.5
VC 0
STA 12+70.31
ORIGINAL EL 298.34
DESIGN EL 300.21
DESIGN EARTHWORK
FILL AREA 1092.75
CUT AREA 243.20
VF 839.8
VC 91.5
STA 13+18.36
ORIGINAL EL 299.41
DESIGN EL 301.34
DESIGN EARTHWORK
FILL AREA 1057.12
CUT AREA 210.69
VF 739.5
VC 119.6
STA 12+00
ORIGINAL EL 298.71
DESIGN EL 301.42
DESIGN EARTHWORK
FILL AREA 1140.05
CUT AREA 0
VF 1918.2
VC 0
STA 13+00
ORIGINAL EL 298.69
DESIGN EL 301.27
DESIGN EARTHWORK
FILL AREA 1117.78
CUT AREA 141.20
VF 1215.4
VC 211.3
18" CROSS DRAIN SHOWN AT STA. 12+91.28
LOCATED ON SHEET 32
(CI+7 TO CI-3)
OLD GEYER SPRINGS
DRIVEWAY
EX R/W
PROP R/W
SEL. BARROW 1087.40 SF
SEL. BARROW 1001.61 SF
SEL. BARROW 1182.89 SF
SEL. BARROW 1137.15 SF
SEL. BARROW 164.09 SF
SEL. BARROW 971.59 SF
SEL. BARROW 1140.05 SF
SEL. BARROW 1092.75 SF
SEL. BARROW 928.87 SF
SEL. BARROW 128.25 SF
CUT AREA 82.26 SF
CUT AREA 141.20 SF
CUT AREA 243.20 SF
CUT AREA 112.72 SF
CUT AREA 210.69 SF
GRAN. AGG. 87.92 SF
GRAN. AGG. 105.44 SF
GRAN. AGG. 114.59 SF
18" SD
G301.19
G300.83
G301.61
G301.31
G300.88
G300.81
G300.17
G300.24
G300.96
G300.58
G300.33
G302.47
G302.86
FG 301.65
FG 302.07
FG 301.34
FG 301.27
FG 301.42
FG 301.29
FG 303.23
FG 303.62
13 + 18.36
12 + 27.74
12 + 00
13 + 00
12 + 50
12 + 70.31
11 + 50
11 + 36.77
PROP R/W
PROP R/W
PROP R/W
PROP R/W
PROP R/W
PROP R/W
PROP R/W
PROP R/W
305
300
295
70 60 50 40 30 20 10 ℄ 10 20 30 40 50 60 70
90 80 70 60 50 40 30 20 10 ℄ 10 20 30 40 50 60 70 80 90
GEYER SPRINGS CROSS SECTIONS
0 5' 10' 20'
PROJECT 060907
SHEET NO. X9
STATE OF ARKANSAS
LICENSED
PROFESSIONAL
ENGINEER
No. 13825
Leon Delaney Jr.

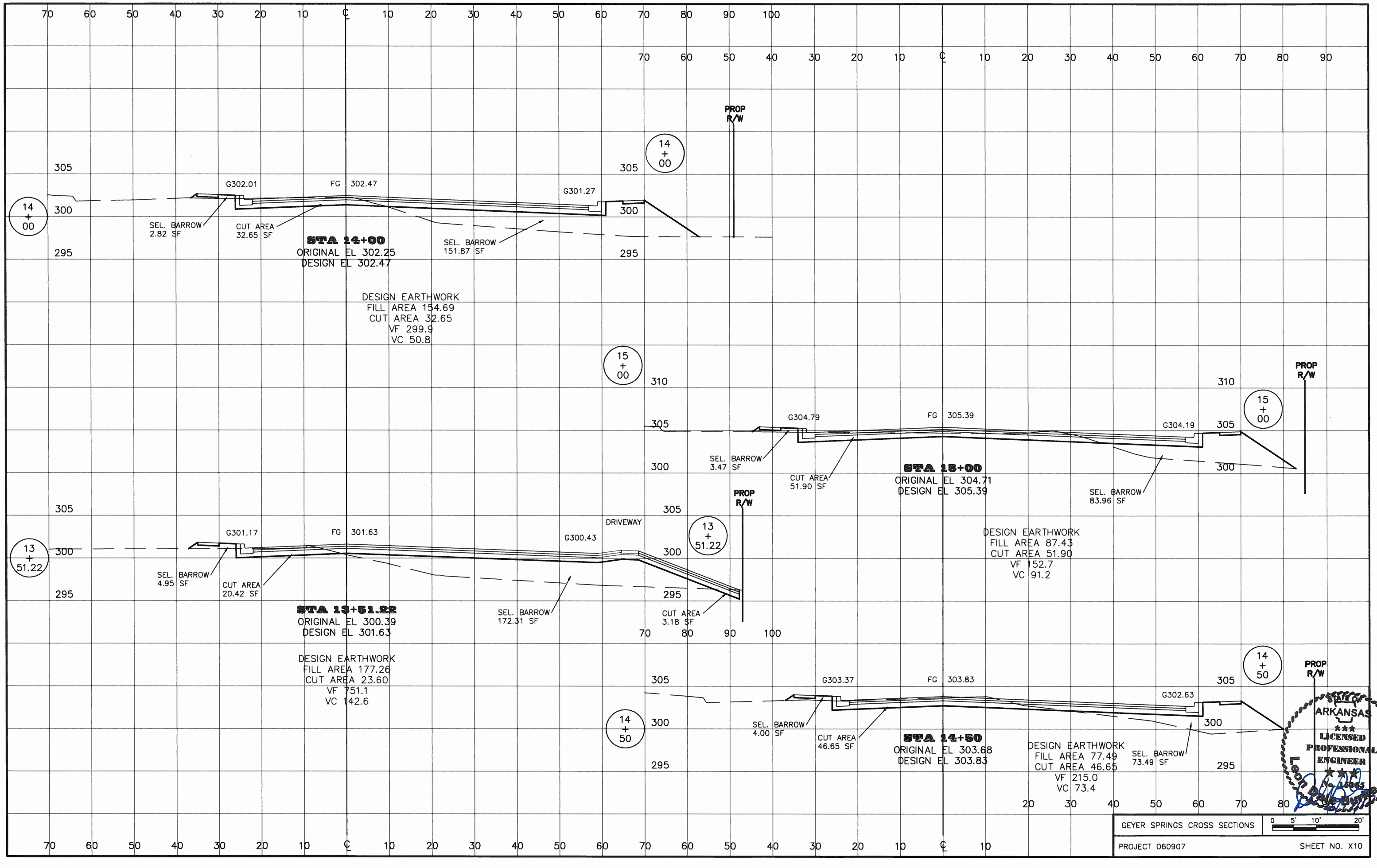
PROP R/W
14 + 00
305
300
295
G302.01
FG 302.47
G301.27
SEL. BARROW 2.82 SF
CUT AREA 32.65 SF
SEL. BARROW 151.87 SF
STA 14+00
ORIGINAL EL 302.25
DESIGN EL 302.47
DESIGN EARTHWORK
FILL AREA 154.69
CUT AREA 32.65
VF 299.9
VC 50.8
15 + 00
310
G304.79
FG 305.39
G304.19
SEL. BARROW 3.47 SF
CUT AREA 51.90 SF
STA 15+00
ORIGINAL EL 304.71
DESIGN EL 305.39
SEL. BARROW 83.96 SF
DESIGN EARTHWORK
FILL AREA 87.43
CUT AREA 51.90
VF 152.7
VC 91.2
13 + 51.22
G301.17
FG 301.63
G300.43
DRIVEWAY
SEL. BARROW 4.95 SF
CUT AREA 20.42 SF
STA 13+51.22
ORIGINAL EL 300.39
DESIGN EL 301.63
SEL. BARROW 172.31 SF
CUT AREA 3.18 SF
DESIGN EARTHWORK
FILL AREA 177.26
CUT AREA 23.60
VF 751.1
VC 142.6
14 + 50
G303.37
FG 303.83
G302.63
SEL. BARROW 4.00 SF
CUT AREA 46.65 SF
STA 14+50
ORIGINAL EL 303.68
DESIGN EL 303.83
DESIGN EARTHWORK
FILL AREA 77.49
CUT AREA 46.65
VF 215.0
VC 73.4
SEL. BARROW 73.49 SF
STATE OF ARKANSAS
LICENSED PROFESSIONAL ENGINEER
Leon Dale Burns, Jr.
No. 16863
GEYER SPRINGS CROSS SECTIONS
0 5' 10' 20'
PROJECT 060907
SHEET NO. X10