CLR PROJECT 03-17-DR-107
WEST 4TH STREET DRAINAGE AND STREET IMPROVMENTS

SOUTH VALENTINE STREET TO WEST CAPITOL AVENUE

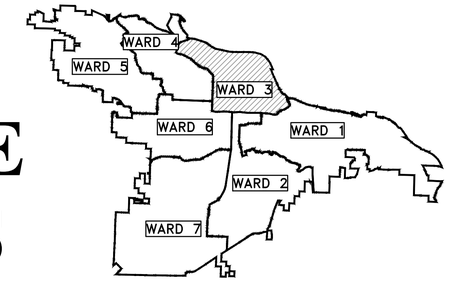

PROJECT LOCATION – WARD 3

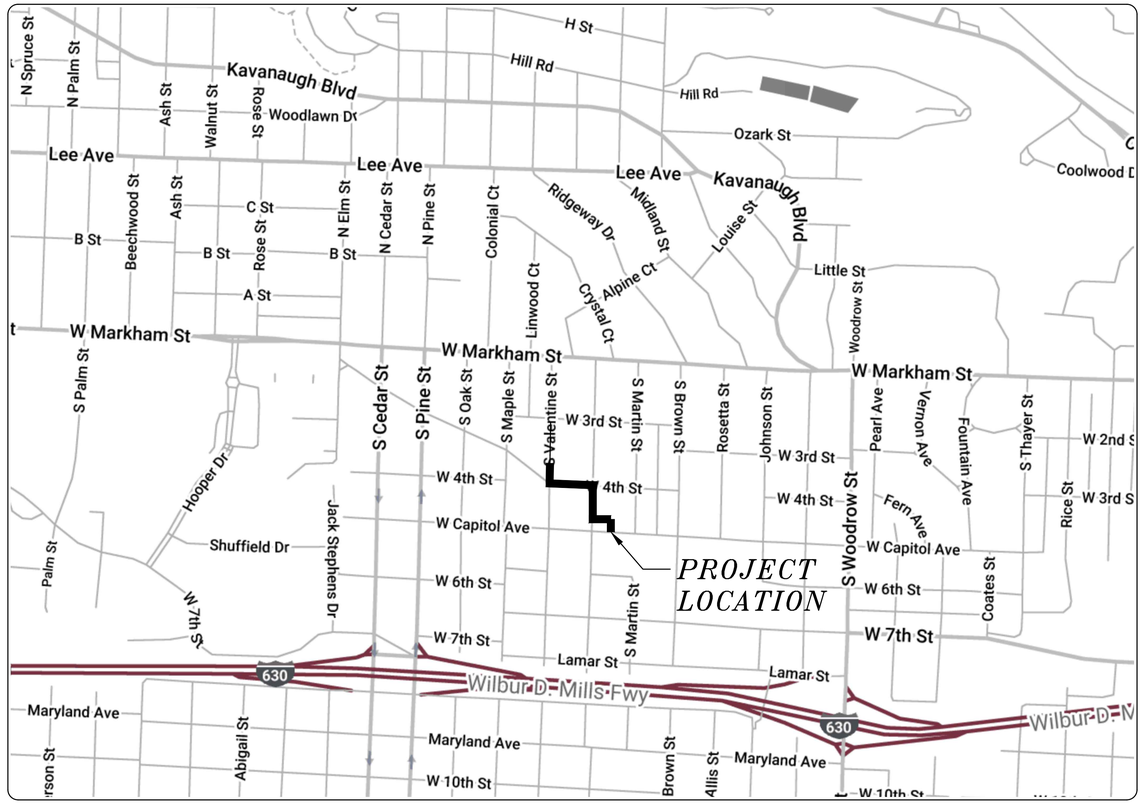

SHEET NO.	TITLE
C1	COVER SHEET
C2	QUANTITIES & DETAILS
C3-C4	TYPICAL SECTIONS
C5-C16	SPECIAL DETAILS
C17	FIELD TIES/LAYOUT
C18	BOX CULVERT 1
C19	BOX CULVERT 2
C20	BOX CULVERT 3
C21	WEST 4TH STREET 1
C22	WEST 4TH STREET 2
C23	SOUTH VALENTINE STREET
C24	VALMAR STREET
C25	EROSION CONTROL
C26-C27	MAINTENANCE OF TRAFFIC
C28-C29	DRIVEWAY DETAILS
C30-C34	CROSS SECTIONS

60% SUBMITTAL

PUBLIC WORKS · CITY OF LITTLE ROCK ·

2019-2021
BOND PROGRAM

DEPARTMENT OF PUBLIC WORKS
CIVIL ENGINEERING
701 WEST MARKHAM STREET
LITTLE ROCK, ARKANSAS 72201

811 Know what's below. Call before you dig.

GARVER
4701 Northshore Drive
North Little Rock, AR 72118
501-376-3633

REVISIONS	DATE

CITY OF LITTLE ROCK, ARKANSAS
WEST 4TH STREET DRAINAGE AND STREET IMPROVEMENTS

COVER SHEET

DEPARTMENT OF PUBLIC WORKS
CIVIL ENGINEERING
701 W. MARKHAM
LITTLE ROCK, ARKANSAS 72201

DRAWN BY	MJM
DESIGNED	RCC
CHECKED	RCC
DATE	12-10-2019
SCALE	N.T.S.
PROJECT NO.	03-17-DR-107
SHEET NO.	C1

	CLR PROJECT# 03-17-DR-107		
	WEST 4TH STREET DRAINAGE AND STREET IMPROVEMENTS		
	December 10, 2019		
ITEM #	**ITEM DESCRIPTION**	**UNIT**	**QUANTITY**
2.01	SITE PREPARATION	LS	1
3.01	UNCLASSIFIED EXCAVATION	CY	1,293
3.06	BORROW MATERIAL	CY	909
3.40	TOPSOIL	CY	83
4.01	AGGREGATE BASE COURSE	TON	1,021
6.01	ACHM SURFACE COURSE	TON	413
7.06	CONCRETE DRIVEWAY (6" THICK), STANDARD FINISH	SF	1,989
8.03	CONCRETE CURB AND GUTTER (CLASS 3)	LF	1,437
9.04	CONCRETE SIDEWALK (4" THICK)	SF	3,973
10.04	CURB INLET - 4' BOX	EA	14
10.06A	CURB INLET - 5.25' X 4.5' BOX	EA	1
10.06B	CURB INLET - REVERSE THROAT	EA	1
10.10	WING 6' EXTENSION	EA	11
10.14	WING 10' EXTENSION	EA	7
11.01	REINFORCED CONCRETE PRECAST BOX CULVERT	LF	596
11.06	REINFORCED CONCRETE HEADWALL	CY	4
11.10	REINFORCED CONCRETE	CY	174
11.60	CONCRETE DITCH PAVING	SY	205
13.18X	STORM DRAIN PIPE, 18" RCP CROSS DRAIN	LF	99
13.36S	STORM DRAIN PIPE, 36" RCP SIDE DRAIN	LF	12
13.36X	STORM DRAIN PIPE, 36" RCP CROSS DRAIN (CLASS IV)	LF	29
13.63	CONCRETE PLUG ON EXISTING STORM DRAIN	EA	1
14.01	SOLID SODDING, BERMUDA	SY	744
16.01	MAINTENANCE OF TRAFFIC	LS	1
17.01	PAVEMENT REPAIRS	SY	15
18.40	HANDRAIL	LF	61
18.45	RIPRAP (NON - GROUTED)	CY	40
18.50	ACCESS RAMP	SF	277.00
19.01	FINAL CLEANUP	LS	1.00
24.02	CHECK DAM (CD)	CY	1
24.06	SEDIMENT BARRIER, SILT FENCE (SD1)	EA	15
24.09	SEDIMENT BARRIER, BLOCK (SD4)	EA	15
24.12	SILT FENCE - TYPE B (SFB)	LF	347
25.04	FENCE CHAIN LINK (4')	LF	214
25.16	FENCE WOOD (6')	LF	71
25.54	FENCE GATE, WOOD DOUBLE SWING (4')	LF	11
25.55	FENCE GATE, WOOD DOUBLE SWING (6')	LF	11
606.36C	FLARED END SECTION 36" RCP	EA	1

EXISTING

- IRON ROD — IR
- PK NAIL — PK
- R.R. SPIKE — RR(Sp)
- CONC. MONUMENT — CM
- WATER VALVE — WV
- WATER METER — WM
- FIRE HYDRANT — FH
- GAS METER — GM
- GAS VALVE — GV
- CLEAN-OUT — CO
- GUARD POST (BOLLARD) — GP
- SIGN POST
- BENCHMARK
- STORM SEWER MANHOLE — D
- SANITARY SEWER MANHOLE — S
- TELEPHONE MANHOLE — T
- ELECTRIC MANHOLE — E
- TELEPHONE BOX — T
- ELECTRIC BOX — E
- CABLE BOX — C
- UTILITY POLE
- GUY WIRE
- LIGHT POLE
- POST OR POLE (TYPE AS NOTED)
- MAILBOX
- DECIDUOUS TREE
- EVERGREEN/CONIFEROUS TREE
- BUSH
- PROPERTY LINE
- SETBACK LINE
- EASEMENT LINE
- CURB
- FENCE — X — X
- OVERHEAD UTILITY — OHP — OHP
- UNDERGROUND TELEPHONE — UGT — UGT — UGT
- UNDERGROUND ELECTRIC — UGE — UGE — UGE
- WATER LINE — 8"W — 8"W — 8"W
- SEWER LINE — SAN
- GAS LINE — GAS — GAS — GAS
- STORM SEWER/CULVERT — 24" CMP/RCP/DIP
- CONTOUR LINE — 650

PROPOSED

- CONTOUR — 25
- SPOT ELEVATION — 25.00
- SPOT CURB ELEVATION — 25.50 / 25.00
- STORM SEWER – PIPE
- STORM SEWER – MITERED END SECTION
- STORM SEWER – GRATE INLET
- STORM SEWER – JUNCTION BOX — D D
- STORM SEWER – FLARED END SECTION
- STORM SEWER – HEADWALL
- STORM SEWER – INLET WITH SINGLE EXTENSION — D
- STORM SEWER – INLET WITH DOUBLE EXTENSION — D
- STORM SEWER – AREA INLET — D
- GRADE BREAK LINE
- HIGH POINT — HP
- LOW POINT — LP
- CUT LINE — C
- FILL LINE — F
- SANITARY SEWER PIPE
- SANITARY SEWER MANHOLE — S
- CURB
- CONCRETE
- CONSTRUCTION – ENTRANCE/EXIT — CO
- CHECK DAM — CD
- DIVERSION BERM — DI
- DOWNDRAIN STRUCTURE – TEMPORARY — DN
- ROCK DAM — RD
- SEDIMENT BARRIER – SILT FENCE — SD1
- SEDIMENT BARRIER – GRAVEL RING — SD2
- SEDIMENT BARRIER – BLOCK & GRAVEL — SD3
- SEDIMENT BARRIER – BLOCK — SD4
- TEMPORARY SEDIMENT BASIN — SB1
- SILT FENCE – TYPE A — SFA
- SILT FENCE – TYPE B — SFB
- SILT FENCE – TYPE C — SFC
- STORM DRAIN OUTLET PROTECTION — ST
- SURFACE ROUGHENING — SU
- DISTURBED AREA STABILIZATION –TEMPORARY STABILIZATION — TS1
- DISTURBED AREA STABILIZATION –TEMPORARY GRASSING — TS2
- DISTURBED AREA STABILIZATION –PERMANENT GRASSING — TS3
- MATTING/BLANKETS — Mb

REVISIONS	DATE

CITY OF LITTLE ROCK, ARKANSAS
WEST 4TH STREET DRAINAGE AND STREET IMPROVEMENTS

QUANTITIES & DETAILS

DEPARTMENT OF PUBLIC WORKS
CIVIL ENGINEERING
701 W. MARKHAM
LITTLE ROCK, ARKANSAS 72201

DRAWN BY	MJM
DESIGNED	RCC
CHECKED	RCC
DATE	12-10-2019
SCALE	N.T.S
PROJECT NO.	03-17-DR-107
SHEET NO.	C2

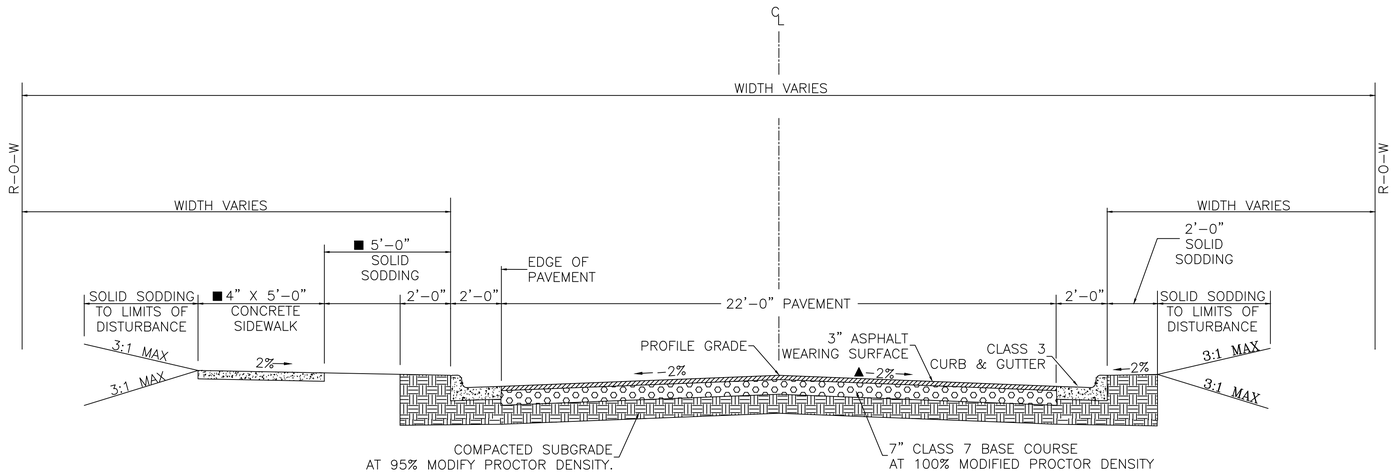

TYPICAL SECTION
WEST 4TH STREET
STA. 10+49.00 TO 14+66.07
STA. 14+93.08 TO STA. 15+55.44

▲ TRANSITION CROSS SLOPE FROM -2% TO +2% BETWEEN STA. 10+85 AND STA. 11+25
TRANSITION CROSS SLOPE FROM +2% TO -2% BETWEEN STA. 11+75 AND STA. 12+15

■ SEE PLAN AND PROFILE SHEETS FOR VARIATIONS

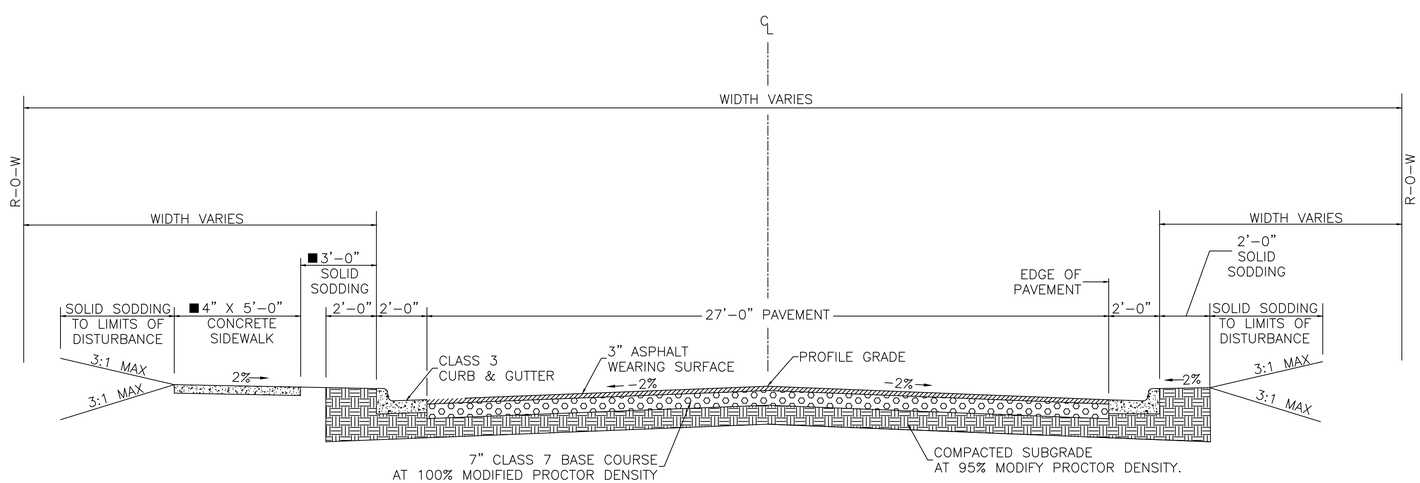

TYPICAL SECTION
VALENTINE STREET
STA. 51+20.00 TO STA. 51+83.36
STA. 52+05.96 TO STA. 52+50.00

REVISIONS	DATE

CITY OF LITTLE ROCK, ARKANSAS
WEST 4TH STREET DRAINAGE AND STREET IMPROVEMENTS

TYPICAL SECTIONS

DEPARTMENT OF PUBLIC WORKS
CIVIL ENGINEERING
701 W. MARKHAM
LITTLE ROCK, ARKANSAS 72201

DRAWN BY	MJM
DESIGNED	RCC
CHECKED	RCC
DATE	12-10-2019
SCALE	N.T.S
PROJECT NO.	03-17-DR-107
SHEET NO.	C3

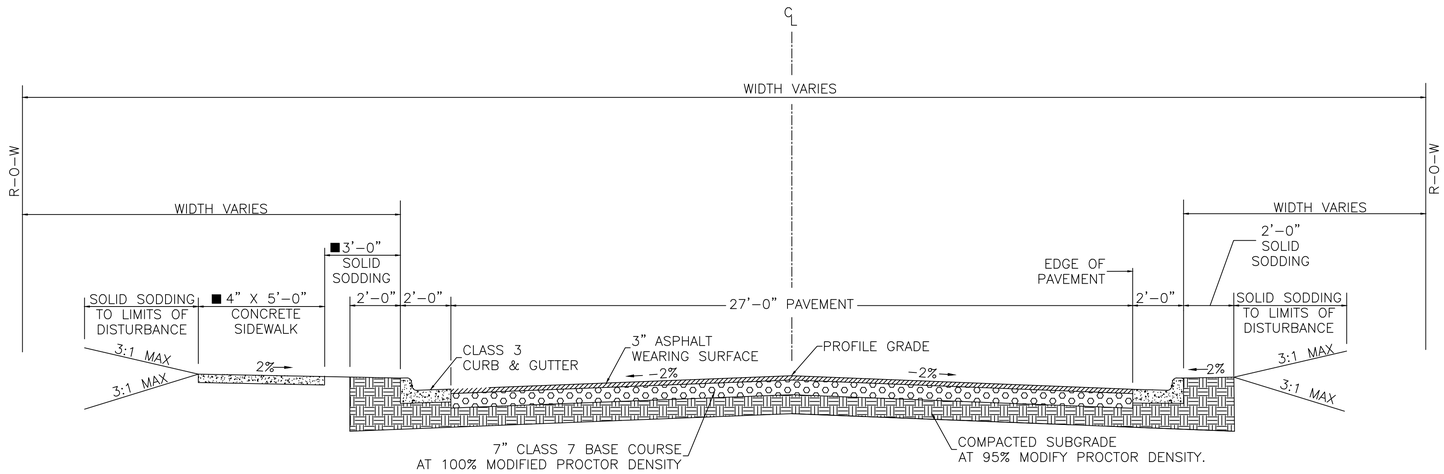

TYPICAL SECTION
VALMAR STREET
STA. 100+50.00 TO STA. 103+50.00

■ SEE PLAN AND PROFILE SHEETS FOR VARIATIONS

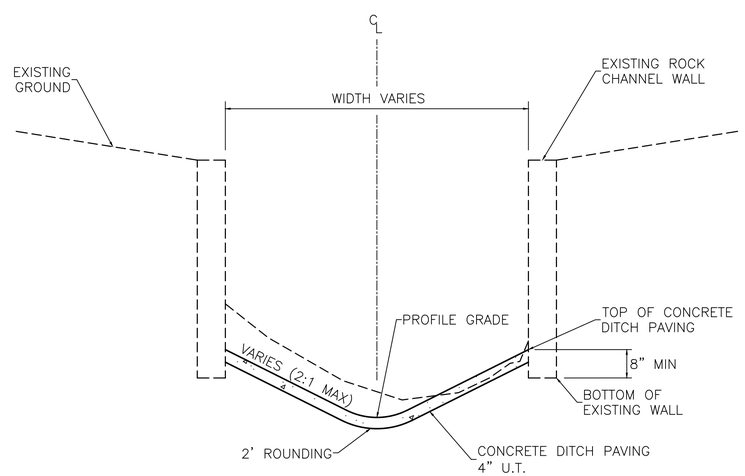

TYPICAL SECTION
CONCRETE DITCH PAVING
STA. 207+39.95 TO STA. 209+20.05

NOTE:
1" WIDE TRANSVERSE EXPANSION JOINTS SHALL BE PLACED IN CONCRETE DITCH PAVING AT 45' INTERVALS. THE SPACE SHALL BE FILLED WITH APPROVED JOINT FILLER COMPLYING WITH AASHTO M213.

REVISIONS	DATE

CITY OF LITTLE ROCK, ARKANSAS
WEST 4TH STREET DRAINAGE
AND STREET IMPROVEMENTS

TYPICAL SECTIONS

DEPARTMENT OF PUBLIC WORKS
CIVIL ENGINEERING
701 W. MARKHAM
LITTLE ROCK, ARKANSAS 72201

DRAWN BY	MJM
DESIGNED	RCC
CHECKED	RCC
DATE	12-10-2019
SCALE	N.T.S
PROJECT NO.	03-17-DR-107
SHEET NO.	C4

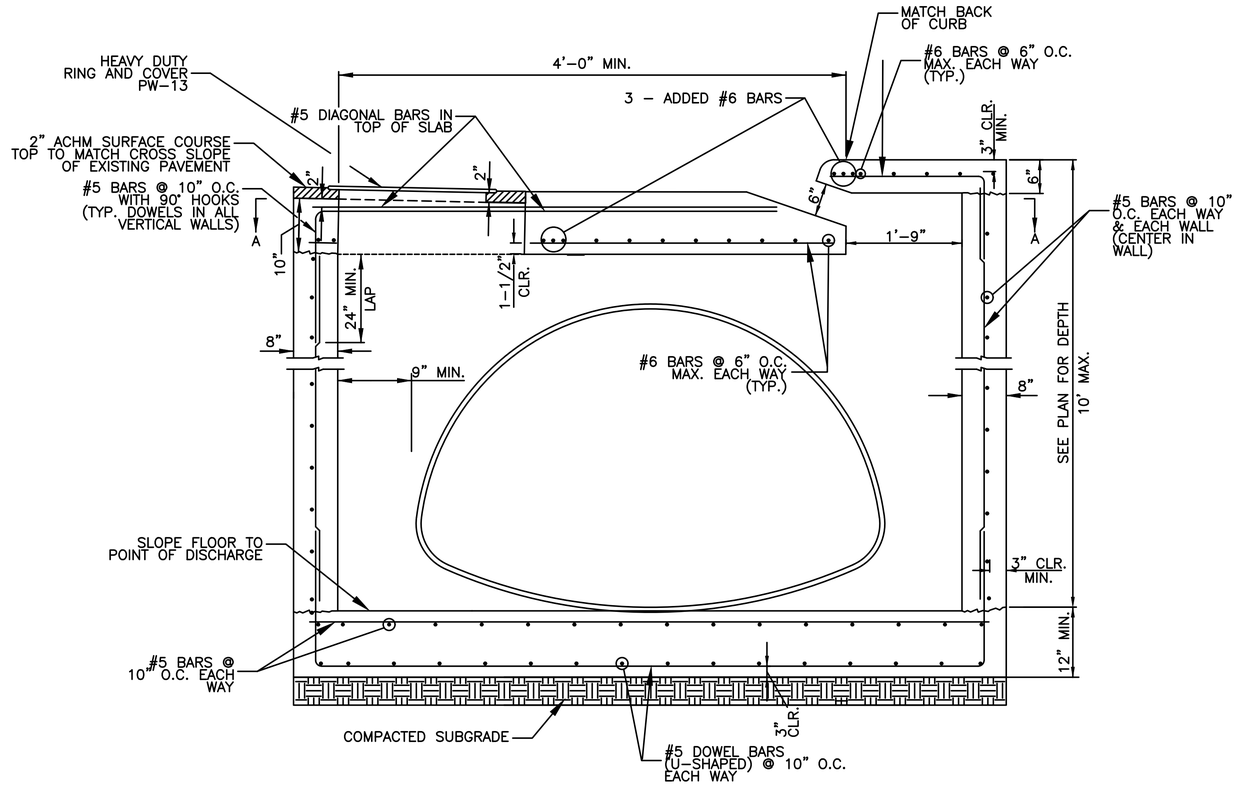

NOTE:

1. ALL EXPOSED CORNERS SHALL HAVE 3/4" CHAMFER.
2. ALL REINFORCING BARS SHALL BE GRADE 60.
3. ALL WORK SHALL COMPLY WITH THE CITY OF LITTLE ROCK CONTRACT CONDITIONS AND SPECIFICATIONS.

REVERSE THROAT CURB INLET
CI-4

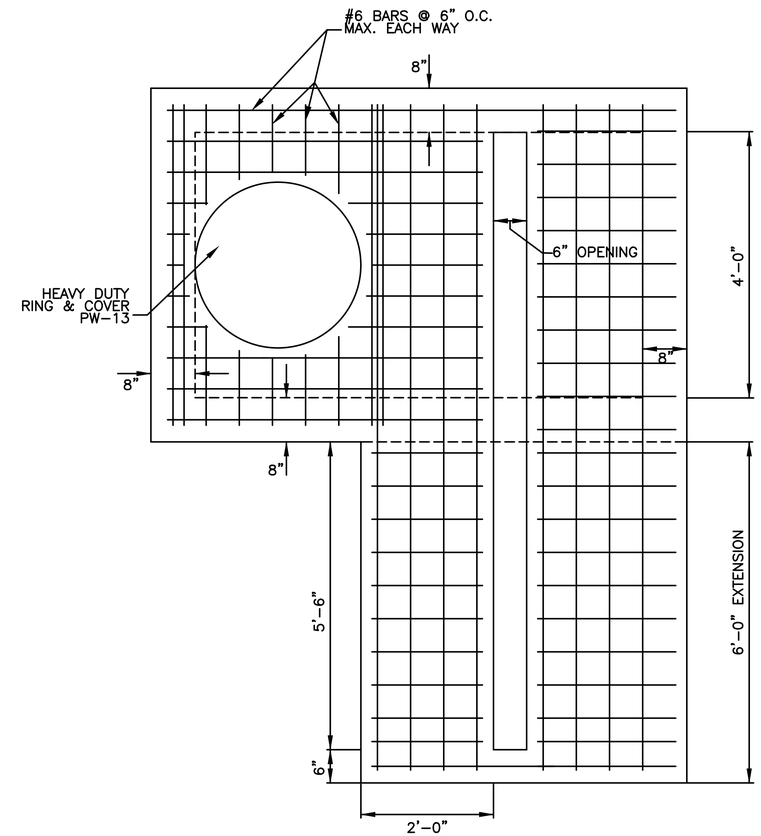

SECTION A-A
(SHOWING BOTTOM MAT OF TOP SLAB)

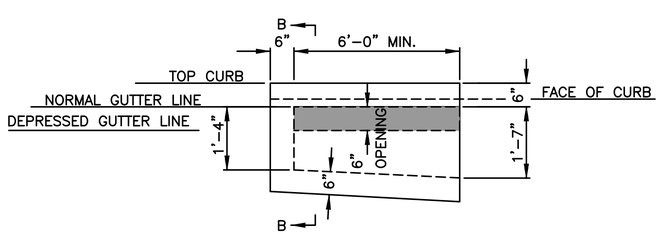

6'-0" EXTENSION

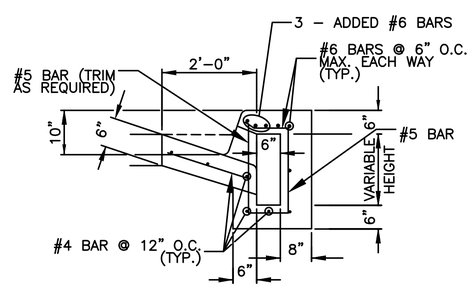

SECTION B-B

REVERSE THROAT EXTENSION DETAIL
N.T.S.

REVISIONS	DATE

CITY OF LITTLE ROCK, ARKANSAS
WEST 4TH STREET DRAINAGE AND STREET IMPROVEMENTS

SPECIAL DETAILS

DEPARTMENT OF PUBLIC WORKS
CIVIL ENGINEERING
701 W. MARKHAM
LITTLE ROCK, ARKANSAS 72201

DRAWN BY	MJM
DESIGNED	RCC
CHECKED	RCC
DATE	12-10-2019
SCALE	N.T.S
PROJECT NO.	03-17-DR-107
SHEET NO.	C5

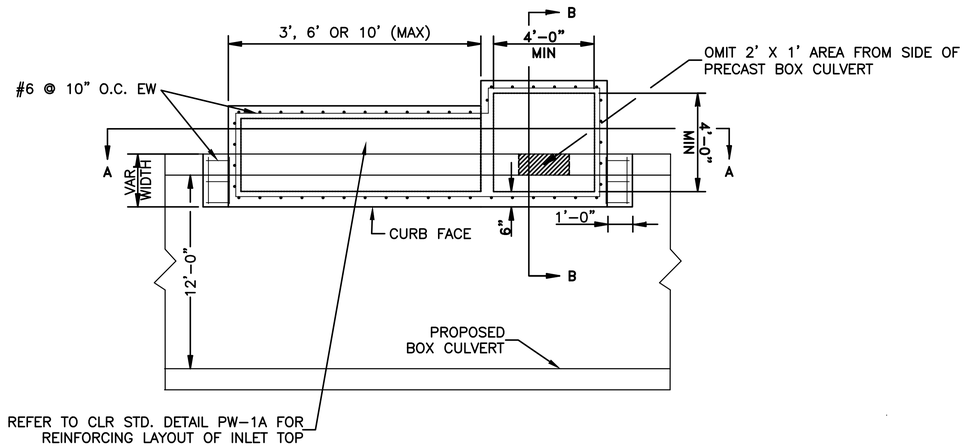

PLAN

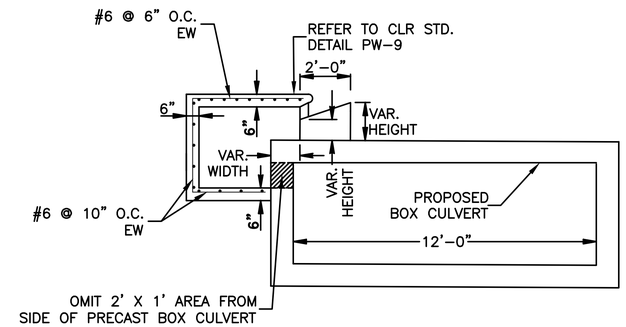

SECTION B-B

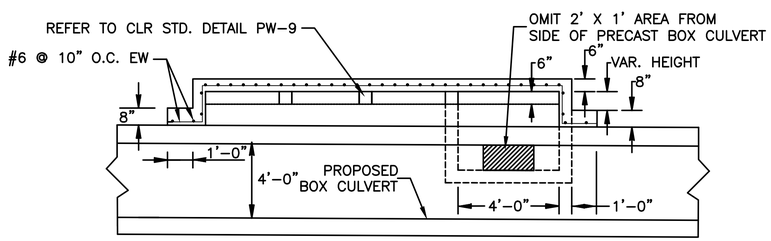

SECTION A-A

CURB INLET CONNECTION TO BOX DETAIL
CI-2, CI-3, CI-4, CI-5

NOTE:

ALL REINFORCING TO BE PLACED 1-1/2" CLEAR TO THE INSIDE OF STRUCTURE

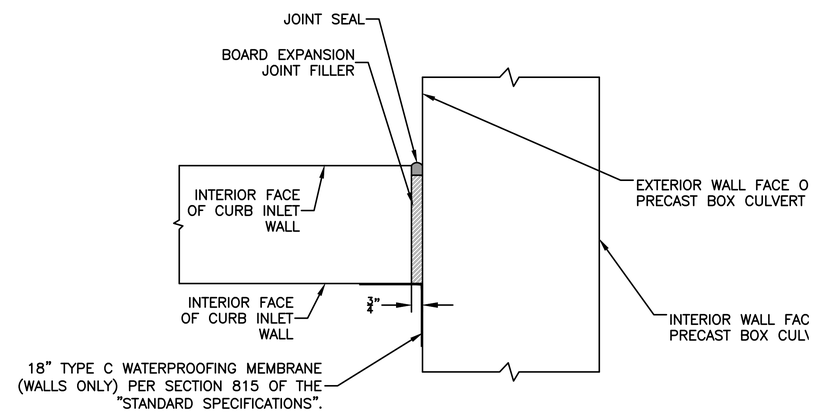

JOINT DETAIL FOR CURB INLET
CONNECTION TO BOX CULVERT

REVISIONS	DATE

CITY OF LITTLE ROCK, ARKANSAS
WEST 4TH STREET DRAINAGE AND STREET IMPROVEMENTS

SPECIAL DETAILS

DEPARTMENT OF PUBLIC WORKS
CIVIL ENGINEERING
701 W. MARKHAM
LITTLE ROCK, ARKANSAS 72201

DRAWN BY	MJM
DESIGNED	RCC
CHECKED	RCC
DATE	12-10-2019
SCALE	N.T.S
PROJECT NO.	03-17-DR-107
SHEET NO.	C6

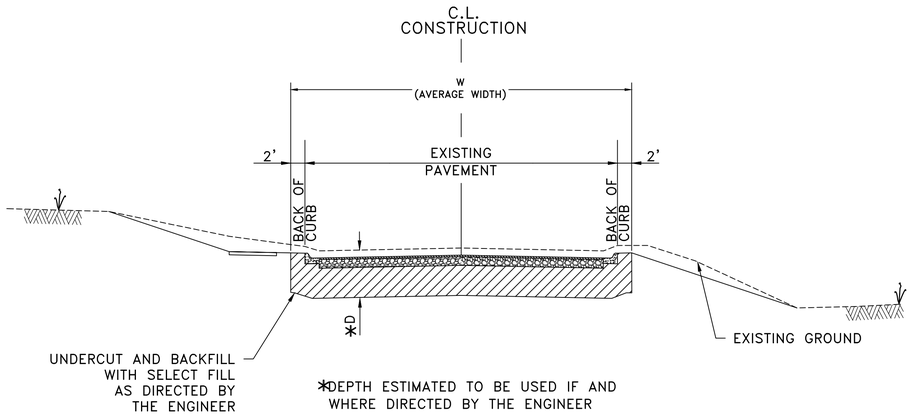

DETAIL OF UNDERCUT

ALL LOCATIONS OUTSIDE EXCAVATION LIMITS FOR REINFORCED CONCRETE BOX CULVERT.

WEST 4TH STREET	D =3'–4'	W = 30' (AVG)
SOUTH VALENTINE STREET	D =3'–4'	W = 35' (AVG)
VALMAR STREET	D =3'–4'	W = 35' (AVG)

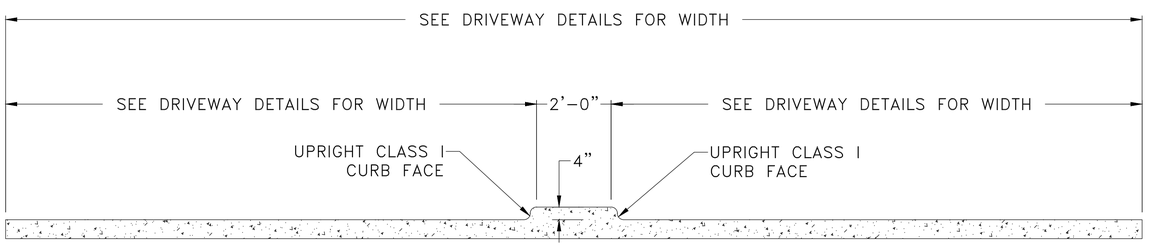

CONCRETE ISLAND IN DRIVEWAY

STA. 13+08.60 LT.
STA. 13+59.85 RT.

NOTE: SEE PW–30, 31, AND 36 FOR ADDITIONAL DETAILS AND GENERAL NOTES

VALMAR STREET OVERFLOW PATH

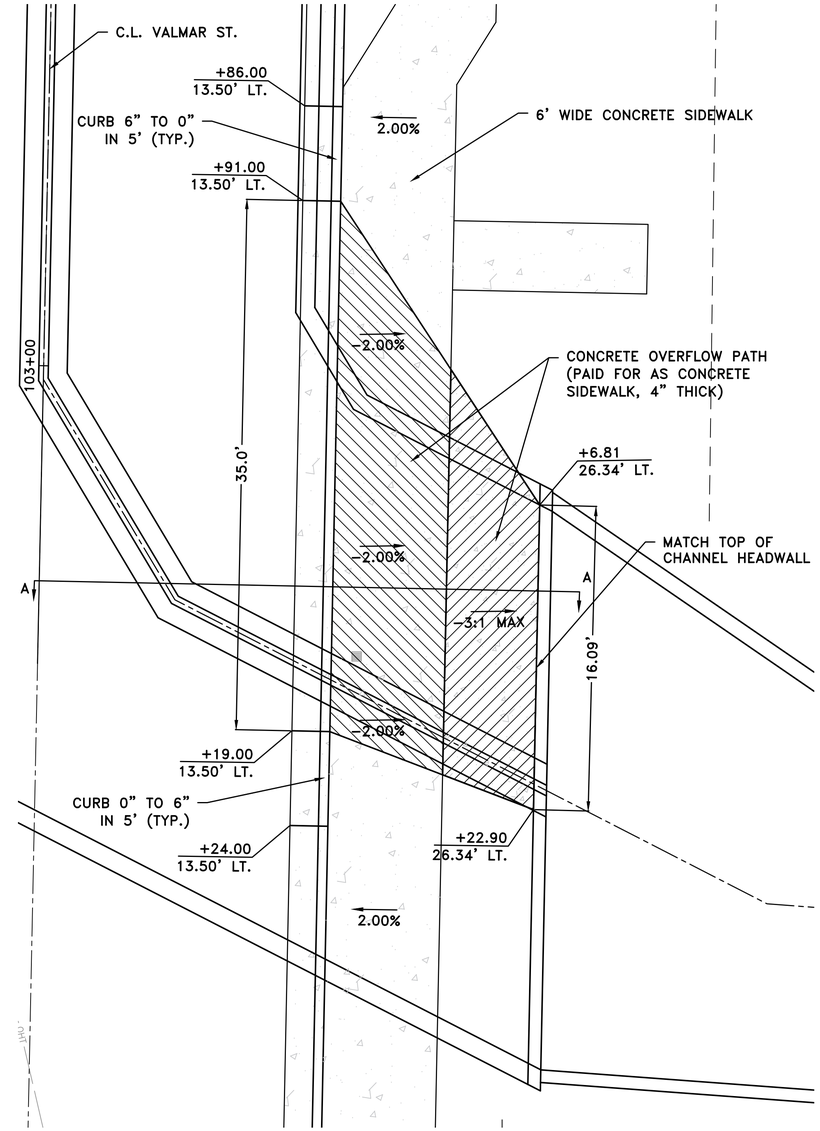

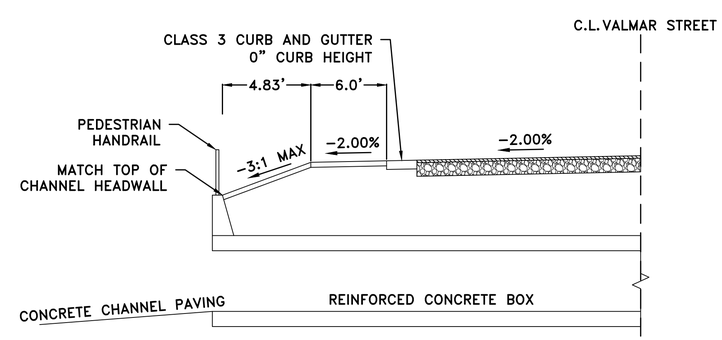

SECTION A–A

REVISIONS	DATE

CITY OF LITTLE ROCK, ARKANSAS
WEST 4TH STREET DRAINAGE
AND STREET IMPROVEMENTS

SPECIAL DETAILS

DEPARTMENT OF PUBLIC WORKS
CIVIL ENGINEERING
701 W. MARKHAM
LITTLE ROCK, ARKANSAS 72201

DRAWN BY	MJM
DESIGNED	RCC
CHECKED	RCC
DATE	12-10-2019
SCALE	N.T.S
PROJECT NO.	03-17-DR-107
SHEET NO.	C7

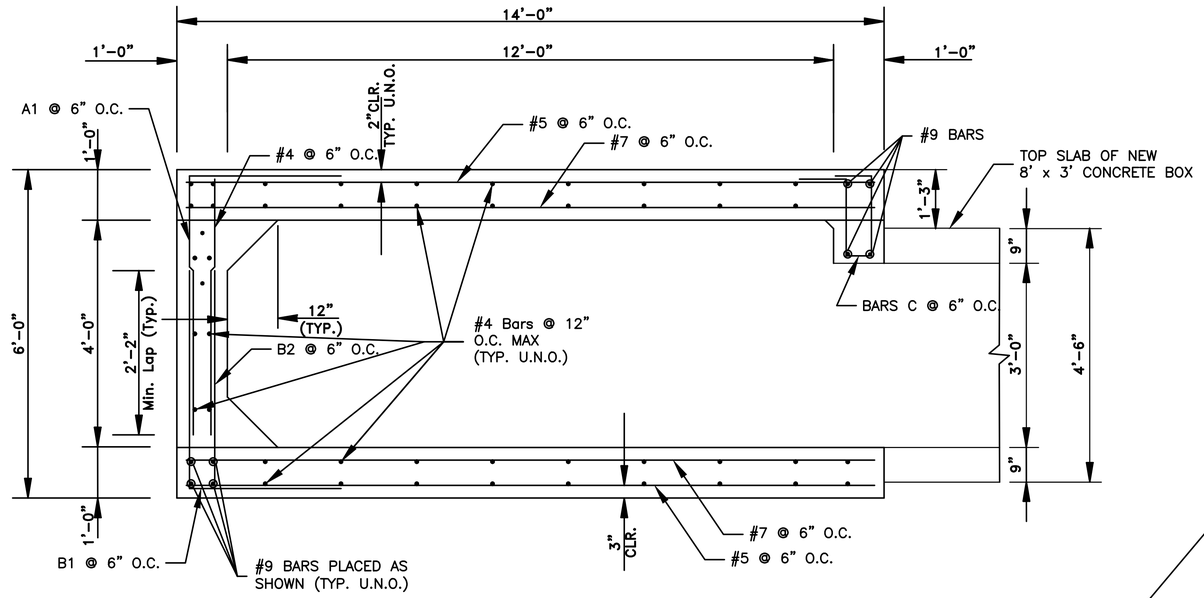

SECTION A–A

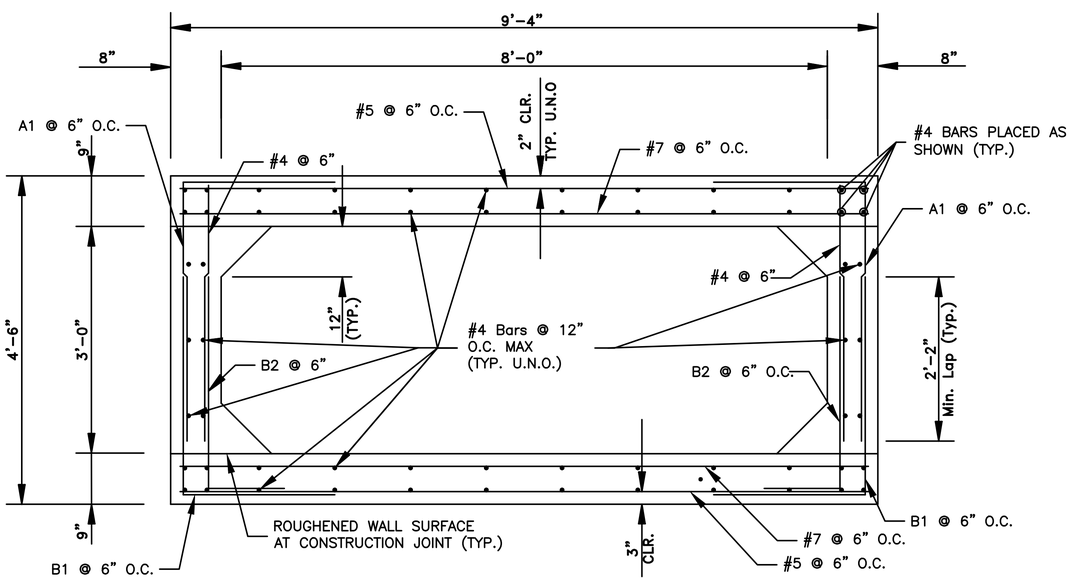

SECTION B–B

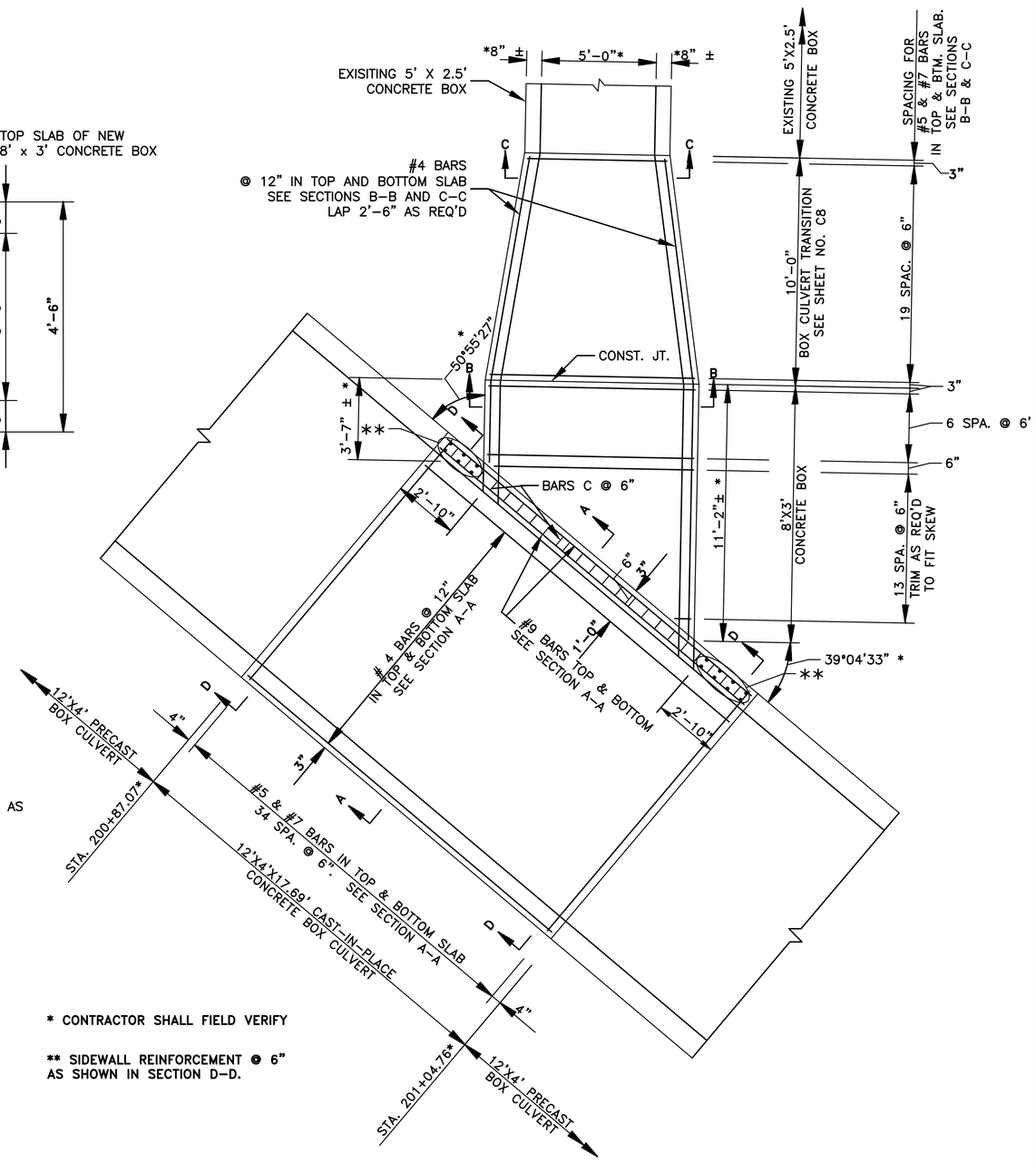

* CONTRACTOR SHALL FIELD VERIFY

** SIDEWALL REINFORCEMENT @ 6" AS SHOWN IN SECTION D–D.

PLAN VIEW

SHOWING DIMENSION & REINFORCEMENT SPACING

REVISIONS	DATE

CITY OF LITTLE ROCK, ARKANSAS
WEST 4TH STREET DRAINAGE AND STREET IMPROVEMENTS

SPECIAL DETAILS

DEPARTMENT OF PUBLIC WORKS
CIVIL ENGINEERING
701 W. MARKHAM
LITTLE ROCK, ARKANSAS 72201

DRAWN BY	AMW
DESIGNED	WMM
CHECKED	RCC
DATE	12-10-2019
SCALE	N.T.S
PROJECT NO.	03-17-DR-107
SHEET NO.	C8

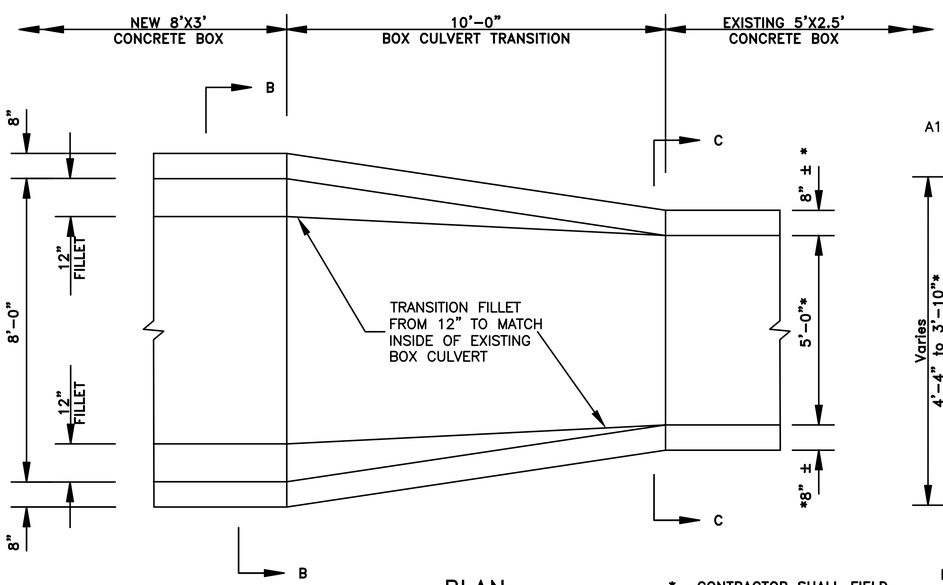

PLAN

* CONTRACTOR SHALL FIELD VERIFY. NEW BOX CULVERT TRANSITION SHALL MATCH DIMENSIONS OF EXISTING BOX CULVERT

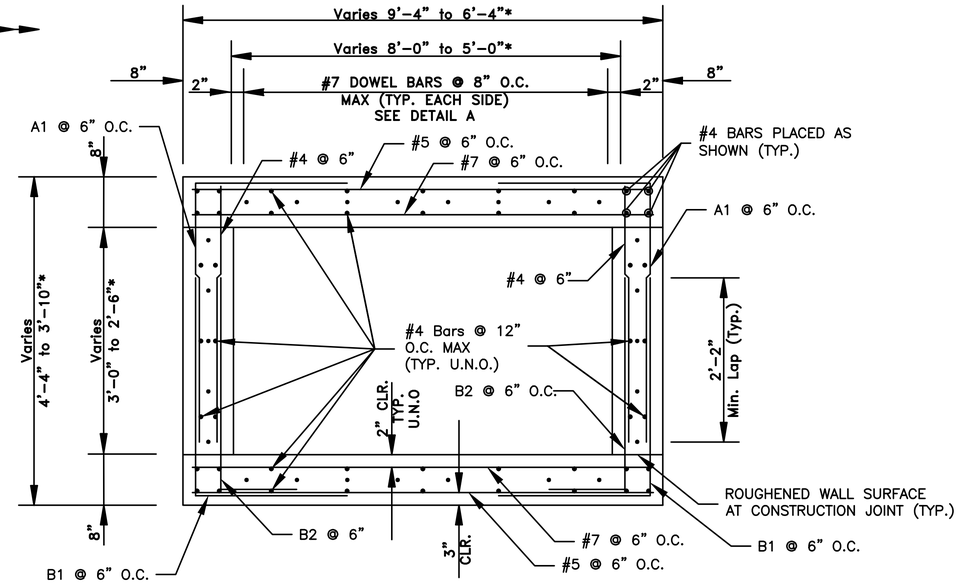

SECTION C–C

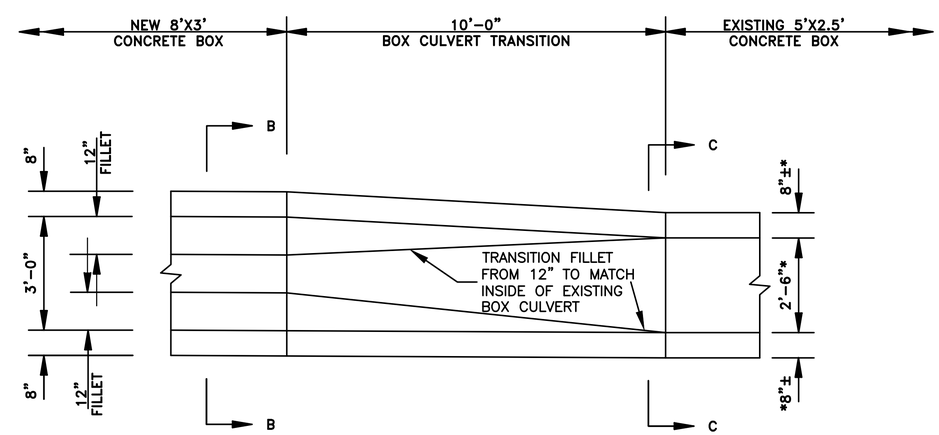

ELEVATION

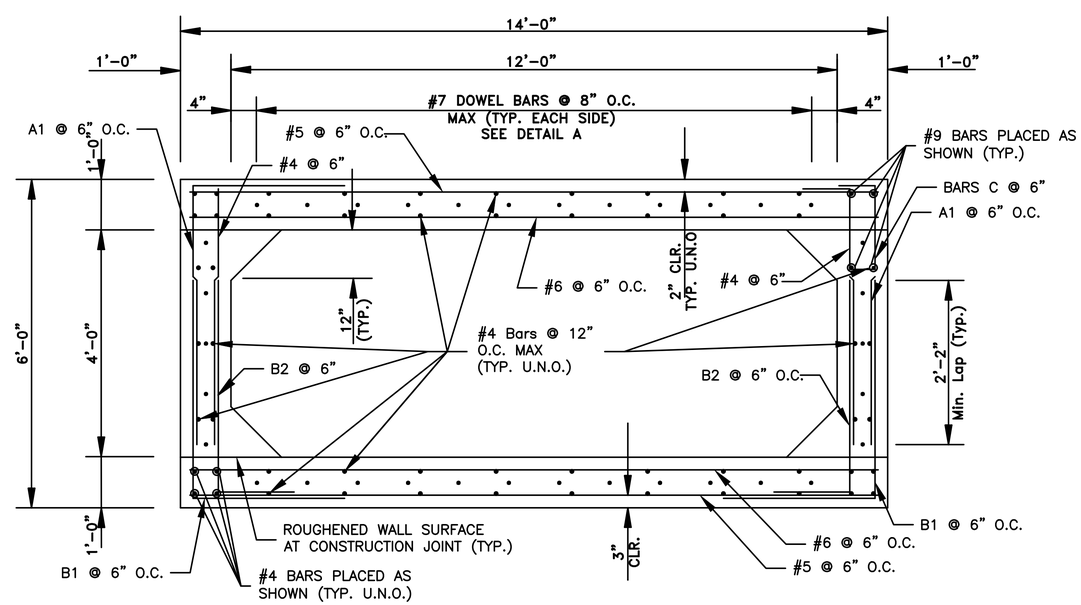

SECTION D–D

REVISIONS	DATE

CITY OF LITTLE ROCK, ARKANSAS
WEST 4TH STREET DRAINAGE
AND STREET IMPROVEMENTS

SPECIAL DETAILS

DEPARTMENT OF PUBLIC WORKS
CIVIL ENGINEERING
701 W. MARKHAM
LITTLE ROCK, ARKANSAS 72201

DRAWN BY	AMW
DESIGNED	WMM
CHECKED	RCC
DATE	12-10-2019
SCALE	N.T.S
PROJECT NO.	03-17-DR-107
SHEET NO.	C9

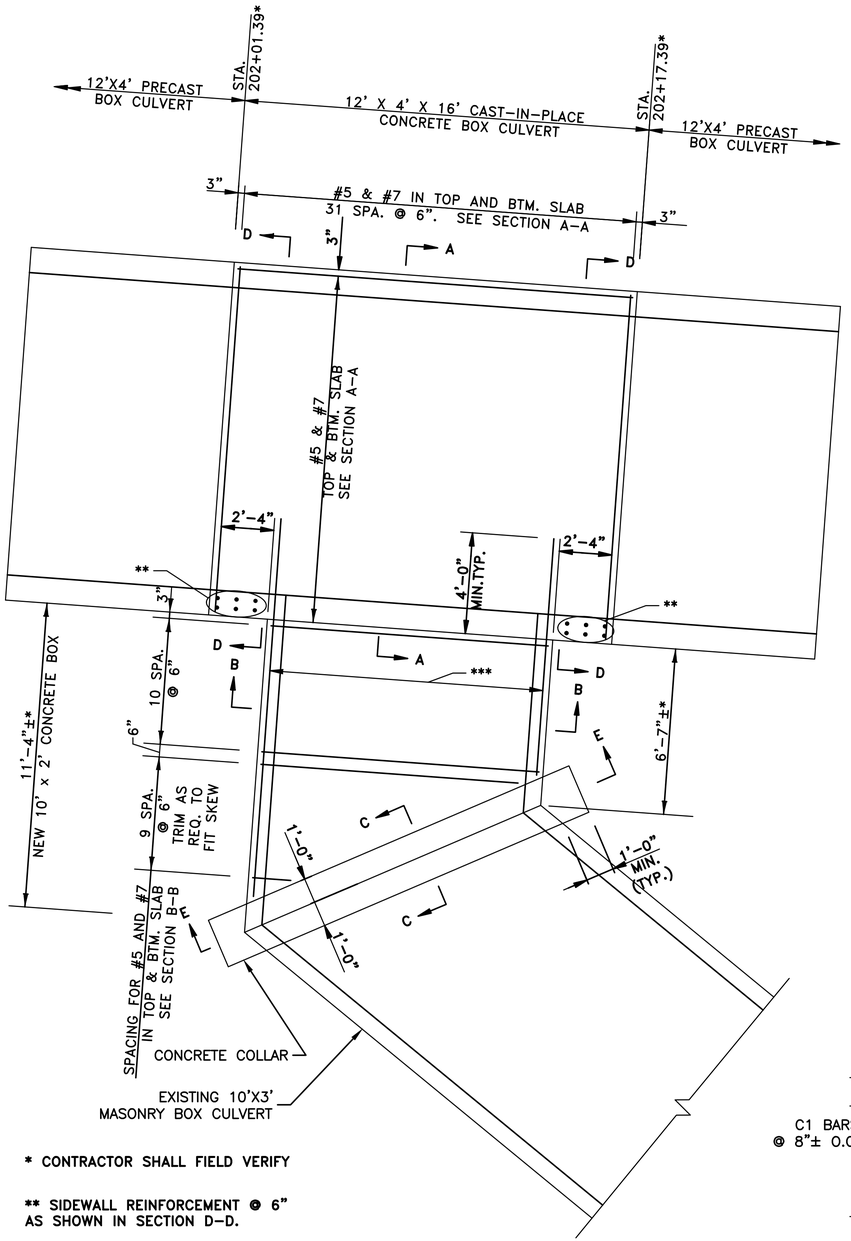

* CONTRACTOR SHALL FIELD VERIFY

** SIDEWALL REINFORCEMENT @ 6" AS SHOWN IN SECTION D-D.

*** #5 & #7 IN TOP & BTM. SLAB 22-SPA @ 6". SEE SECTION B-B.

PLAN VIEW

SHOWING DIMENSION & REINFORCEMENT SPACING

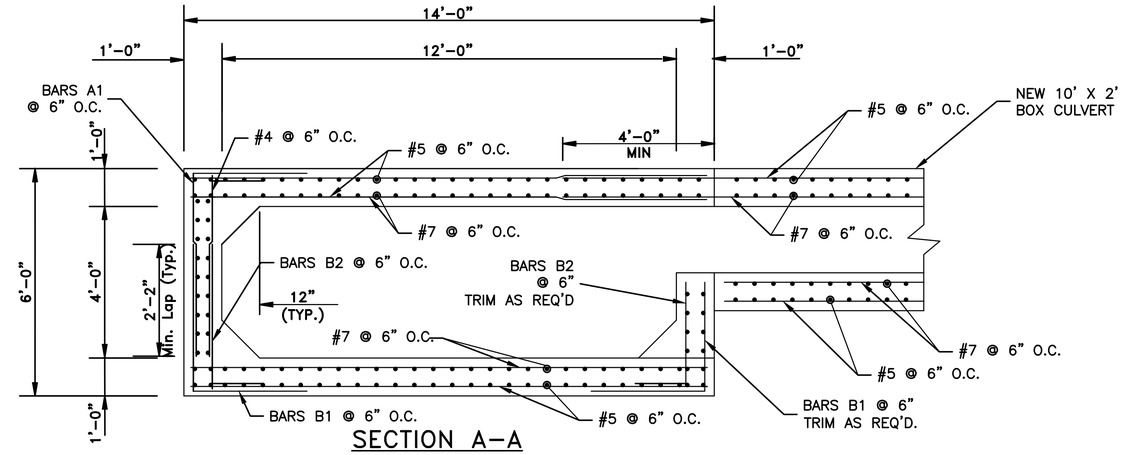

SECTION A-A

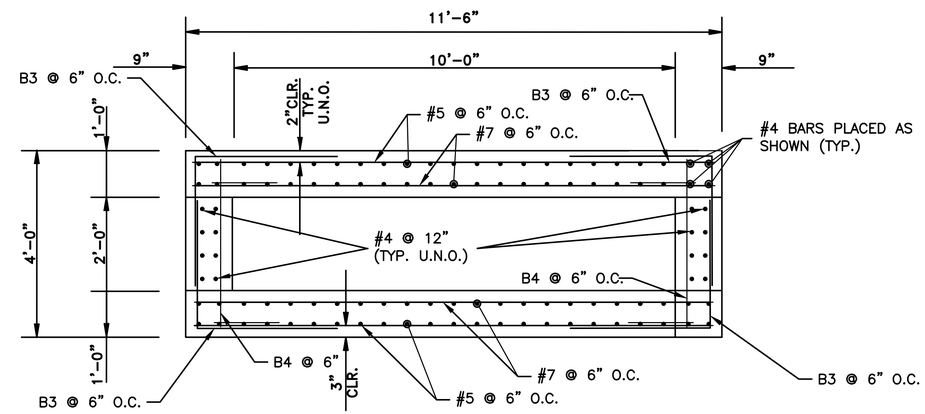

SECTION B-B

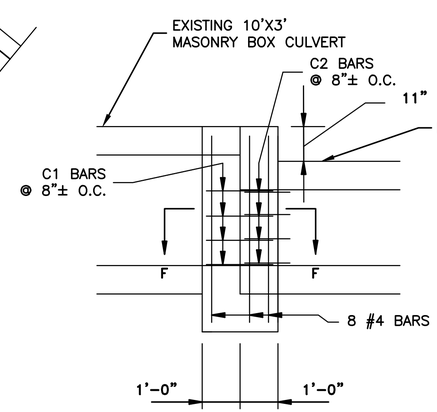

ELEVATION

SHOWING DIMENSIONS AND COLLAR REINFORCEMENT

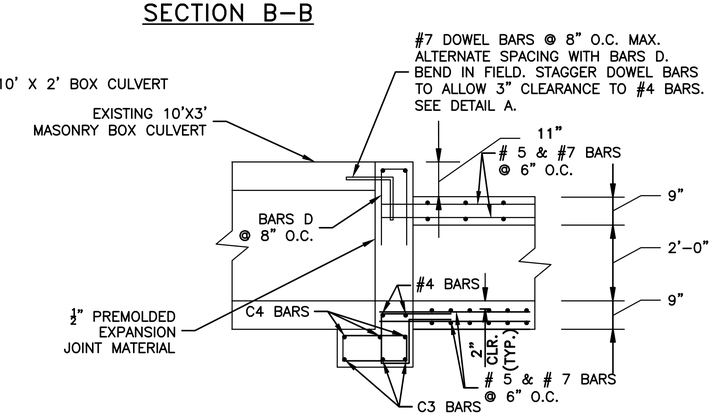

SECTION C-C

REVISIONS	DATE

CITY OF LITTLE ROCK, ARKANSAS
WEST 4TH STREET DRAINAGE AND STREET IMPROVEMENTS

SPECIAL DETAILS

DEPARTMENT OF PUBLIC WORKS
CIVIL ENGINEERING
701 W. MARKHAM
LITTLE ROCK, ARKANSAS 72201

DRAWN BY	AMW
DESIGNED	WMM
CHECKED	RCC
DATE	12-10-2019
SCALE	N.T.S
PROJECT NO.	03-17-DR-107
SHEET NO.	C10

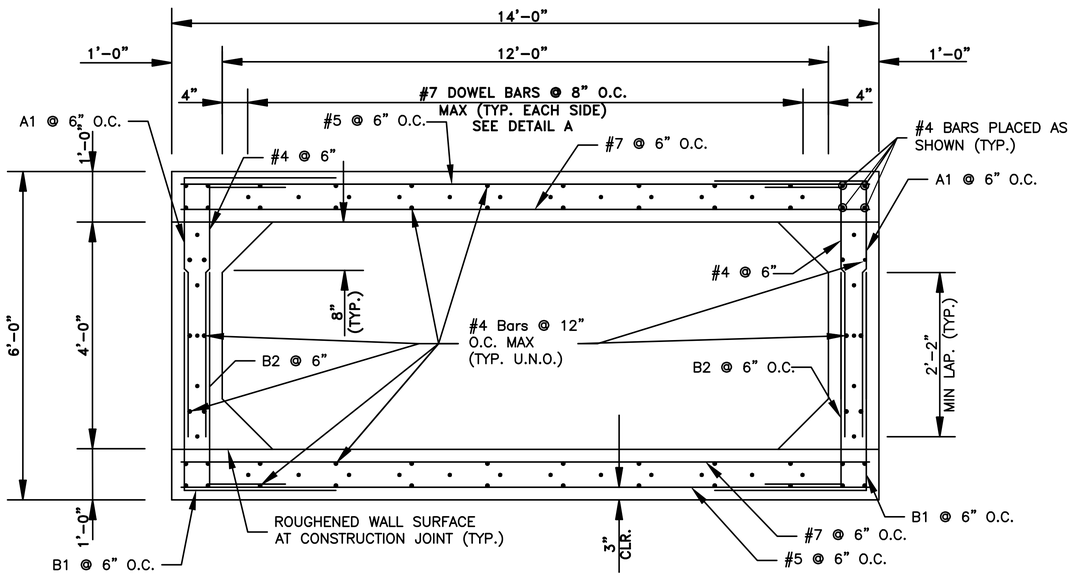

SECTION D-D

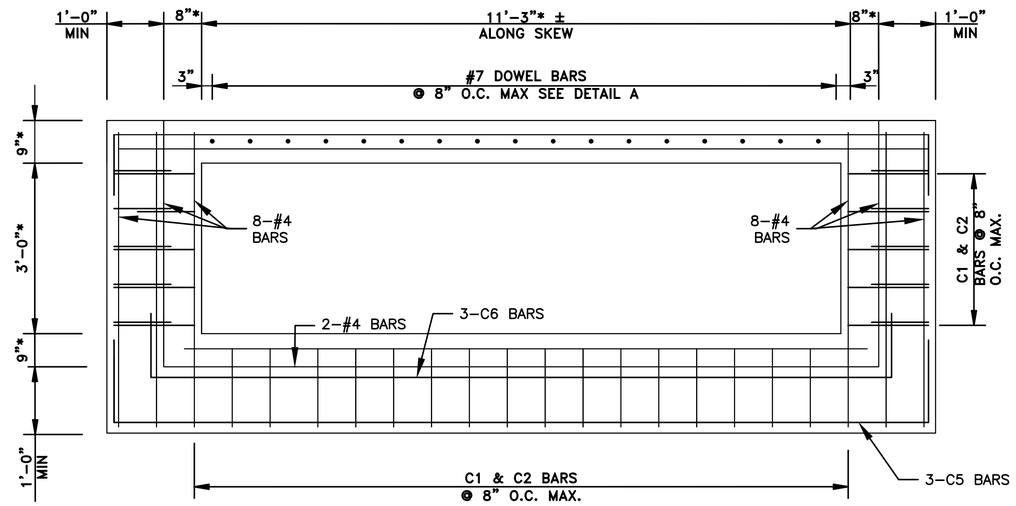

SECTION E-E

SHOWING COLLAR REINFORCEMENT

* CONTRACTOR SHALL FIELD VERIFY. NEW BOX CULVERT TRANSITION SHALL MATCH DIMENSIONS OF EXISTING BOX CULVERT

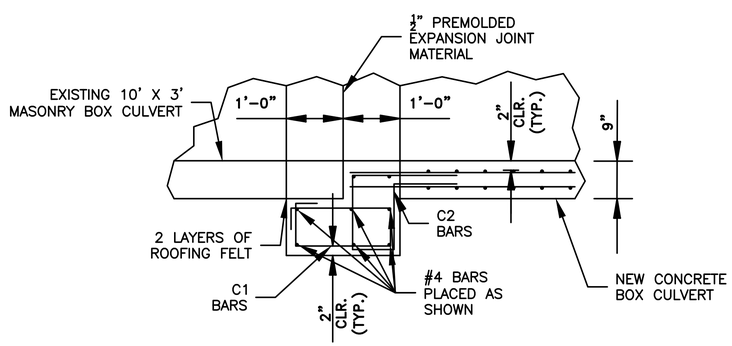

SECTION F-F

GENERAL NOTES:

1. ALL CONSTRUCTION AND MATERIAL REQUIREMENTS SHALL BE IN ACCORDANCE WITH THE CITY OF LITTLE ROCK CONTRACT CONDITIONS AND SPECIFICATIONS.
2. CONCRETE: CONCRETE SHALL BE POURED IN THE DRY AND ALL EXPOSED CORNERS TO BE CHAMFERED ¾". ALL CONCRETE SHALL BE CLASS S WITH A MINIMUM 28 DAY COMPRESSIVE STRENGTH F'C=3,500 PSI.
3. REINFORCING STEEL: ALL REINFORCING STEEL SHALL CONFORM TO AASHTO M31 OR M53, GRADE 60 AND HAVE A 2" MINIMUM CLEARANCE UNLESS OTHERWISE NOTED ON PLANS.
4. REINFORCING STEEL IN BOTTOM SLAB SHALL BE SUPPORTED ON BAR CHAIRS. CHAIRS SHALL BE SUPPORTED ON TIMBER PLANKS OR CLASS C CONCRETE STRIPS SPACED AT 4.0 FOOT CENTERS. THE TOP CHAIR SUPPORTS SHALL BE AT THE ELEVATION OF THE BOTTOM OF THE FOOTING.
5. REINFORCING STEEL IN THE TOP SLAB SHALL BE SUPPORTED ON SLAB SPACERS.
6. REINFORCING STEEL IN THE WALLS SHALL BE HELD IN PLACE BY METAL CHAIRS. MAXIMUM SPACING OF CHAIRS SHALL BE ON 6.0 FOOT CENTERS.
7. COST OF METAL CHAIRS, WOOD PLANKS OR CONRETE STRIPS SHALL BE INCLUDED ON OTHER ITEMS OF WORK.
8. EXCAVATION AND BACKFILL REQUIRED TO CONSTRUCT THE BOX CULVERT WILL NOT BE MEASURED FOR SEPARATE PAYMENT, BUT WILL BE CONSIDERED SUBSIDIARY WORK PERTAINING TO THE CONSTRUCTION OF THE BOX CULVERT.

REVISIONS	DATE

CITY OF LITTLE ROCK, ARKANSAS
WEST 4TH STREET DRAINAGE
AND STREET IMPROVEMENTS

SPECIAL DETAILS

DEPARTMENT OF PUBLIC WORKS
CIVIL ENGINEERING
701 W. MARKHAM
LITTLE ROCK, ARKANSAS 72201

DRAWN BY	AMW
DESIGNED	WMM
CHECKED	RCC
DATE	12-10-2019
SCALE	N.T.S
PROJECT NO.	03-17-DR-107
SHEET NO.	C11

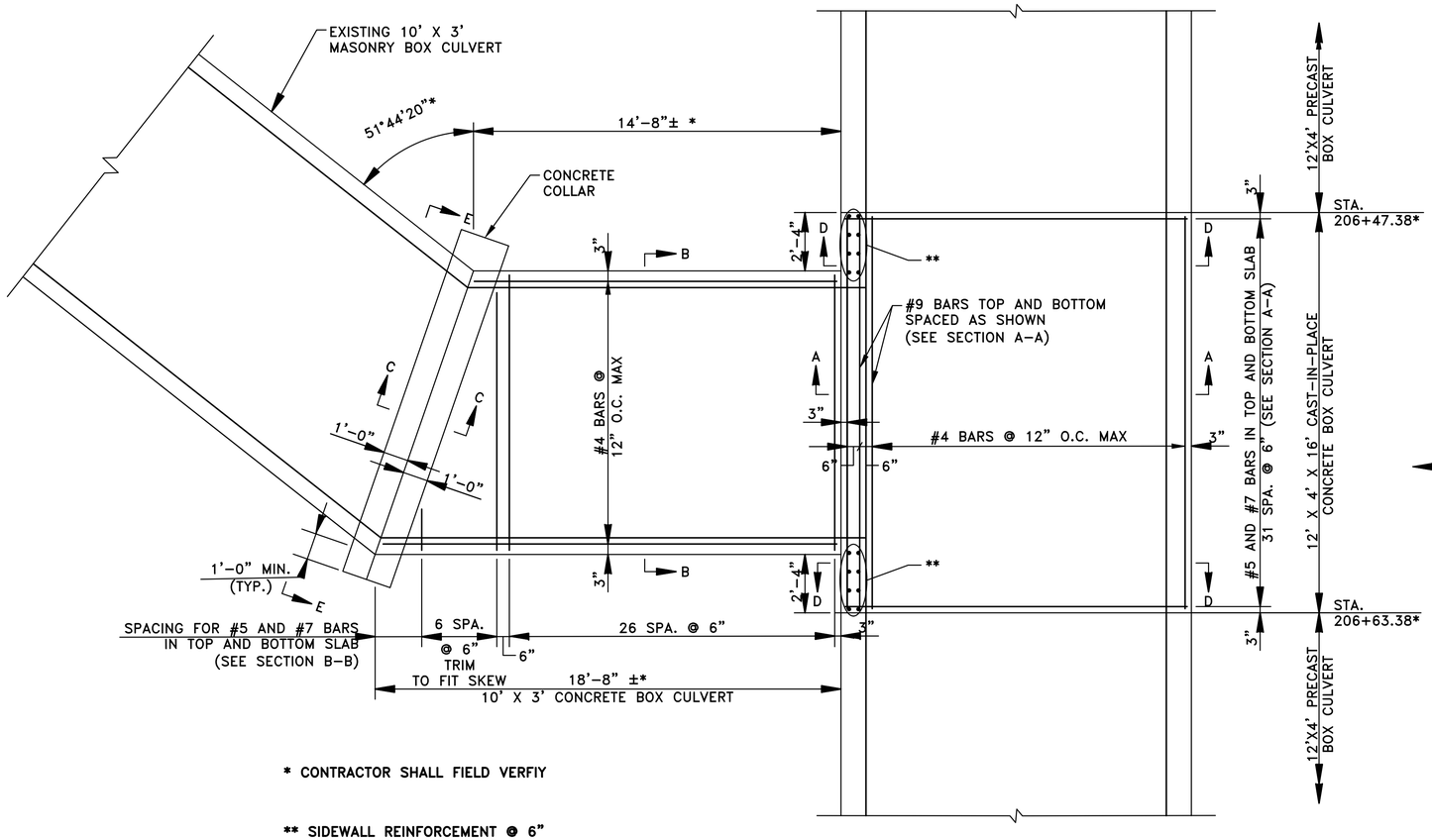

* CONTRACTOR SHALL FIELD VERFIY

** SIDEWALL REINFORCEMENT @ 6" AS SHOWN IN SECTION D-D

PLAN VIEW

SHOWING DIMENSION REINFORCEMENT SPACING

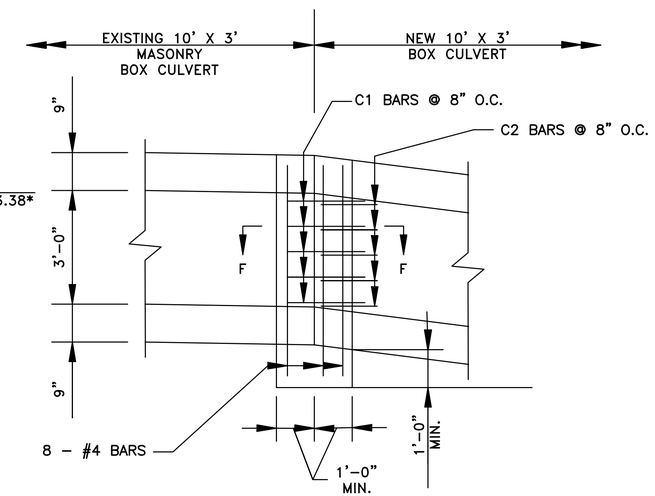

ELEVATION

SHOWING DIMENSIONS AND COLLAR REINFORCEMENT

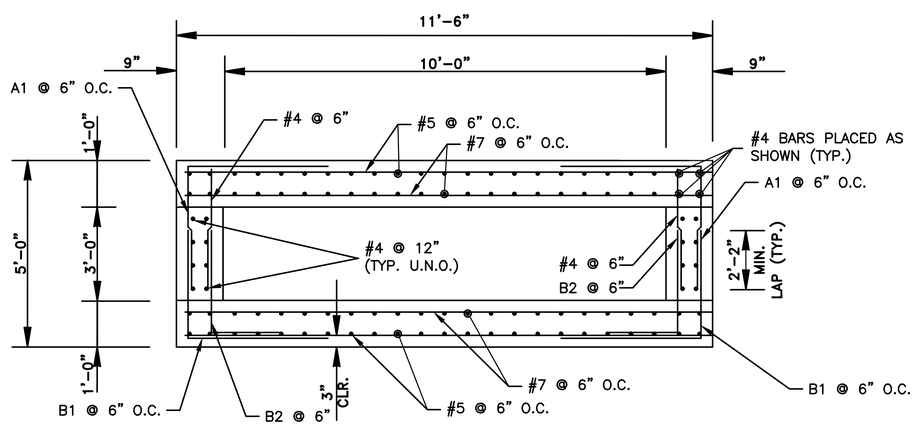

SECTION B-B

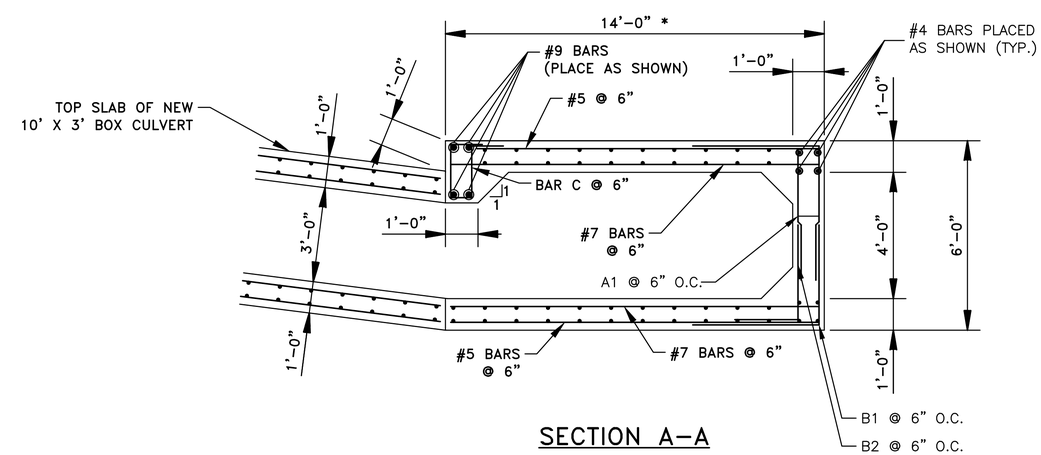

SECTION A-A

REVISIONS	DATE

CITY OF LITTLE ROCK, ARKANSAS
WEST 4TH STREET DRAINAGE AND STREET IMPROVEMENTS

SPECIAL DETAILS

DEPARTMENT OF PUBLIC WORKS
CIVIL ENGINEERING
701 W. MARKHAM
LITTLE ROCK, ARKANSAS 72201

DRAWN BY	JAW
DESIGNED	WMM
CHECKED	RCC
DATE	12-10-2019
SCALE	N.T.S
PROJECT NO.	03-17-DR-107
SHEET NO.	C12

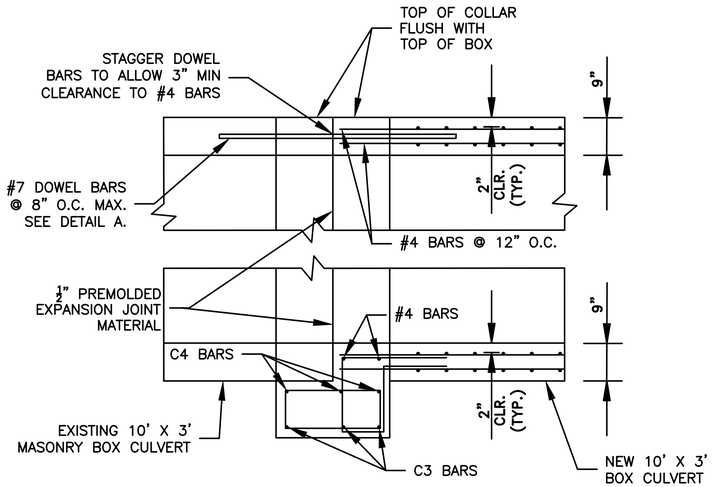

SECTION C–C

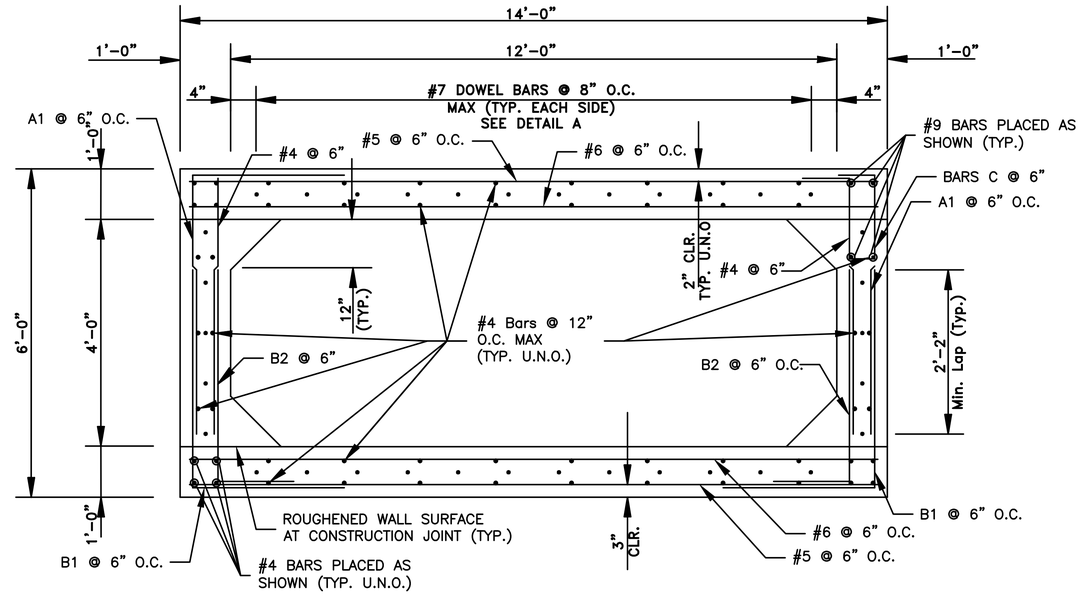

SECTION D–D

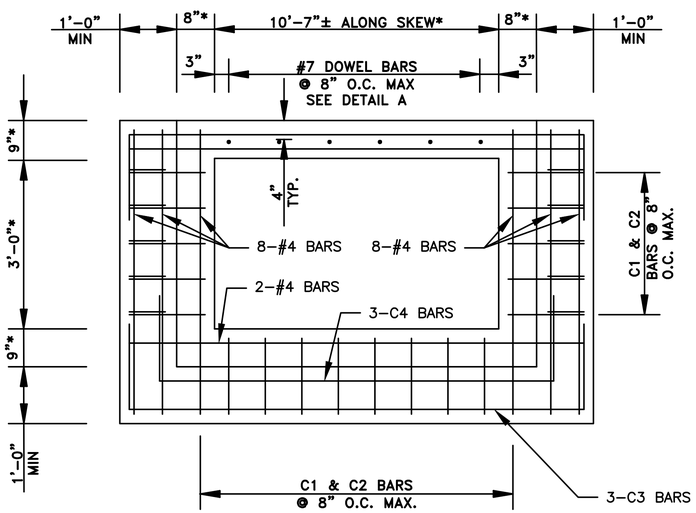

SECTION E–E

SHOWING COLLAR REINFORCEMENT

* CONTRACTOR SHALL FIELD VERIFY. NEW BOX CULVERT TRANSITION SHALL MATCH DIMENSIONS OF EXISTING BOX CULVERT

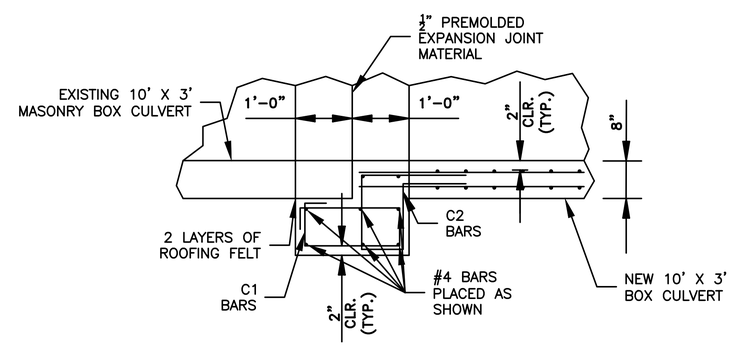

SECTION F–F

REVISIONS	DATE

CITY OF LITTLE ROCK, ARKANSAS
WEST 4TH STREET DRAINAGE AND STREET IMPROVEMENTS

SPECIAL DETAILS

DEPARTMENT OF PUBLIC WORKS
CIVIL ENGINEERING
701 W. MARKHAM
LITTLE ROCK, ARKANSAS 72201

DRAWN BY	JAW
DESIGNED	WMM
CHECKED	RCC
DATE	12-10-2019
SCALE	N.T.S
PROJECT NO.	03-17-DR-107
SHEET NO.	C13

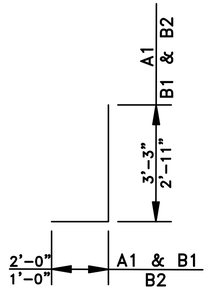

A1, B1, & B2 – #5

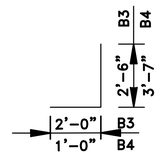

B3 & B4–#5

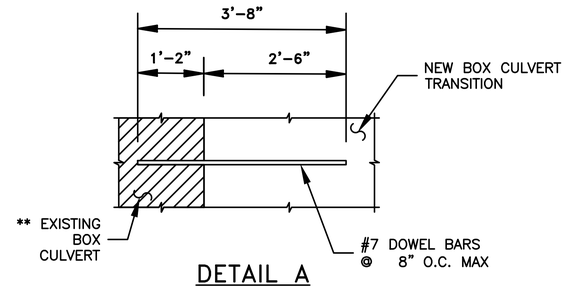

DETAIL A

** BARS SHOWN TO BE EMBEDDED INTO EXISTING BOX CULVERT SHALL BE SECURED USING HILTI HIT RE500 EPOXY ANCHOR OR APPROVED EQUAL. ALL BARS SHALL BE EMBEDDED TO DEPTH SHOWN IN DETAIL A IN STRICT ACCORDANCE WITH MANUFACTURER'S INSTRUCTIONS. HOLES FOR EMBEDDED BARS SHALL BE DRILLED $\frac{1}{4}$" LARGER IN DIAMETER THAN THE BAR.

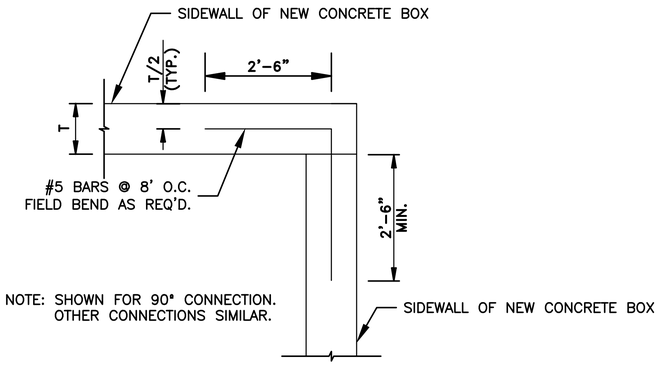

NOTE: SHOWN FOR 90° CONNECTION. OTHER CONNECTIONS SIMILAR.

PLAN VIEW – CORNER DETAIL

SHOWING CONNECTIONS AT NEW CAST-IN-PLACE CONCRETE BOXES

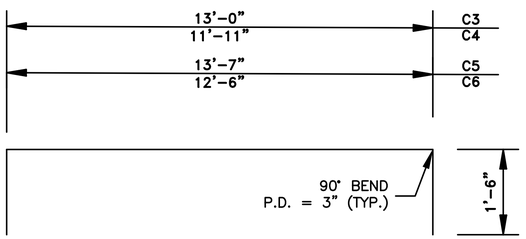

C3–C6 BARS – #4

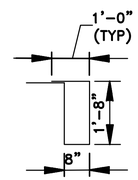

C BARS – #5

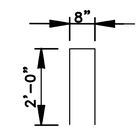

BARS D–#5

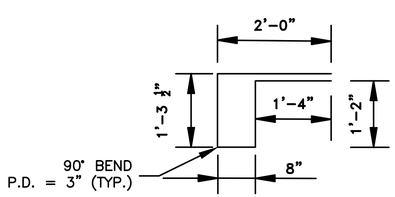

C2 BARS – #4

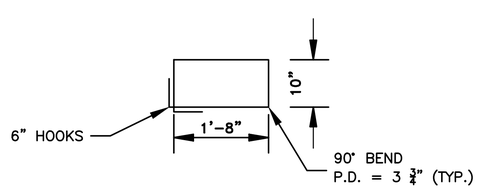

C1 BARS – #5

GENERAL NOTES:

1. ALL CONSTRUCTION AND MATERIAL REQUIREMENTS SHALL BE IN ACCORDANCE WITH THE CITY OF LITTLE ROCK CONTRACT CONDITIONS AND SPECIFICATIONS.
2. CONCRETE: CONCRETE SHALL BE POURED IN THE DRY AND ALL EXPOSED CORNERS TO BE CHAMFERED $\frac{3}{4}$". ALL CONCRETE SHALL BE CLASS S WITH A MINIMUM 28 DAY COMPRESSIVE STRENGTH F'C=3,500 PSI.
3. REINFORCING STEEL: ALL REINFORCING STEEL SHALL CONFORM TO AASHTO M31 OR M53, GRADE 60 AND HAVE A 2" MINIMUM CLEARANCE UNLESS OTHERWISE NOTED ON PLANS.
4. REINFORCING STEEL IN BOTTOM SLAB SHALL BE SUPPORTED ON BAR CHAIRS. CHAIRS SHALL BE SUPPORTED ON TIMBER PLANKS OR CLASS C CONCRETE STRIPS SPACED AT 4.0 FOOT CENTERS. THE TOP CHAIR SUPPORTS SHALL BE AT THE ELEVATION OF THE BOTTOM OF THE FOOTING.
5. REINFORCING STEEL IN THE TOP SLAB SHALL BE SUPPORTED ON SLAB SPACERS.
6. REINFORCING STEEL IN THE WALLS SHALL BE HELD IN PLACE BY METAL CHAIRS. MAXIMUM SPACING OF CHAIRS SHALL BE ON 6.0 FOOT CENTERS.
7. COST OF METAL CHAIRS, WOOD PLANKS OR CONRETE STRIPS SHALL BE INCLUDED ON OTHER ITEMS OF WORK.
8. EXCAVATION AND BACKFILL REQUIRED TO CONSTRUCT THE BOX CULVERT WILL NOT BE MEASURED FOR SEPARATE PAYMENT, BUT WILL BE CONSIDERED SUBSIDIARY WORK PERTAINING TO THE CONSTRUCTION OF THE BOX CULVERT.

REVISIONS	DATE

CITY OF LITTLE ROCK, ARKANSAS
WEST 4TH STREET DRAINAGE AND STREET IMPROVEMENTS

SPECIAL DETAILS

DEPARTMENT OF PUBLIC WORKS
CIVIL ENGINEERING
701 W. MARKHAM
LITTLE ROCK, ARKANSAS 72201

DRAWN BY	AMW
DESIGNED	WMM
CHECKED	RCC
DATE	12-10-2019
SCALE	N.T.S
PROJECT NO.	03-17-DR-107
SHEET NO.	C14

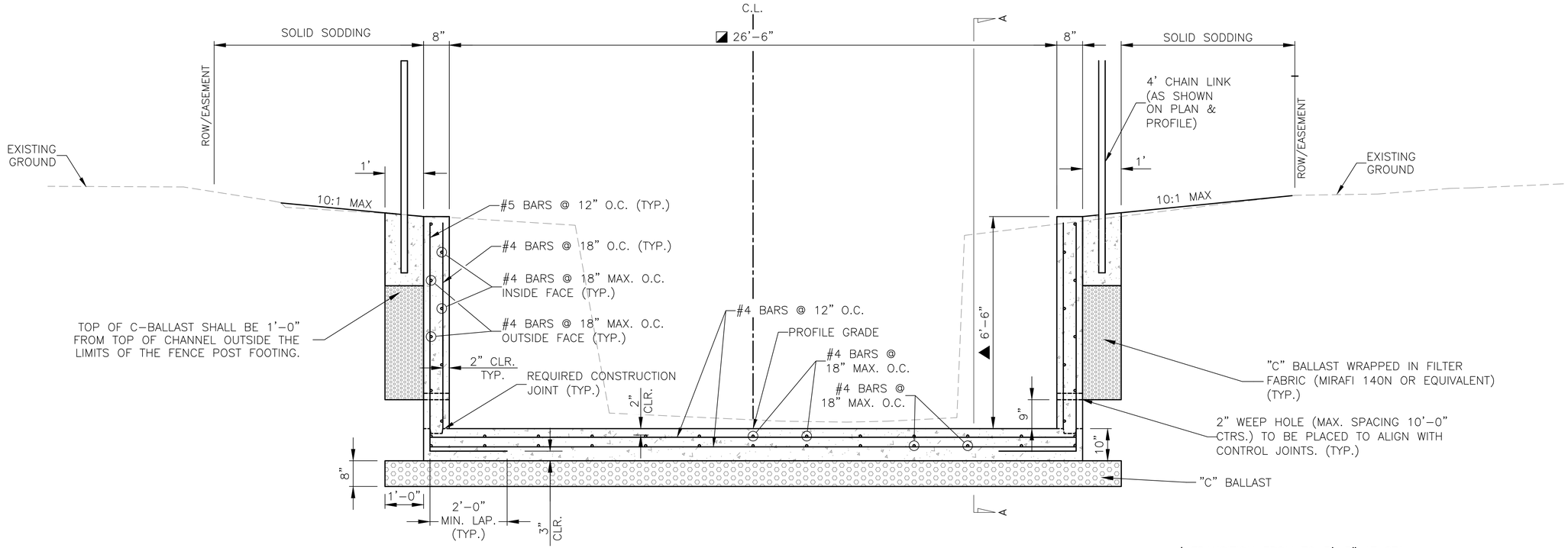

NOTE: PROVIDE KEYWAY AT BASE OF WALLS. SEE KEYWAY DETAIL.

▲ TRANSITION FROM TO 5'-3" AT STA. 200+59 TO 6'-6" AT STA. 200+79

◪ TRANSITION FROM 29'-5.8" AT STA. 206+99.61 TO 17'-8.7" AT STA. 207+20.13 TO 10'-0" AT STA. 207+40.13. SEE PLAN AND PROFILE FOR LEFT AND RIGHT TRANSITIONS.

REINFORCED CONCRETE CHANNEL TYPICAL SECTION

STA. 200+59 TO STA. 200+79
STA. 206+99.61 TO STA. 207+39.95

GENERAL NOTES:

CONCRETE: CONCRETE SHALL BE POURED IN THE DRY AND ALL EXPOSED CORNERS TO BE CHAMFERED $\frac{3}{4}$". ALL CONCRETE SHALL BE CLASS S WITH A MINIMUM 28 DAY COMPRESSIVE STRENGTH F'C=3,500 PSI.

REINFORCING STEEL: ALL REINFORCING STEEL SHALL CONFORM TO AASHTO M31 OR M53, GRADE 60.

LONGITUDINAL BARS ON THE INSIDE AND OUTSIDE FACE OF THE CONCRETE CHANNEL WALL SHALL BE STAGGERED.

LAP LENGTH FOR #4 BARS SHALL BE 1'-9" MINIMUM.

TOE WALL TO BE CONSTRUCTED FULL WIDTH AT THE INLET END OF THE CONCRETE CHANNEL AND TO BE POURED MONOLITHICALLY.

ALL EXCAVATION REQUIRED FOR STRIPPING/MUCKING SHALL BE PAID FOR PER THE UNIT PRICE BID FOR "UNCLASSIFIED EXCAVATION". ALL BACKFILL FOR STRIPPING/MUCKING SHALL BE PAID FOR PER THE UNIT PRICE BID FOR "STONE BACKFILL". STONE BACKFILL MAY BE "B" STONE OR "C" BALLAST.

ALL ROCK EXCAVATION WILL BE PAID FOR PER THE UNIT PRICE BID FOR "UNCLASSIFIED EXCAVATION".

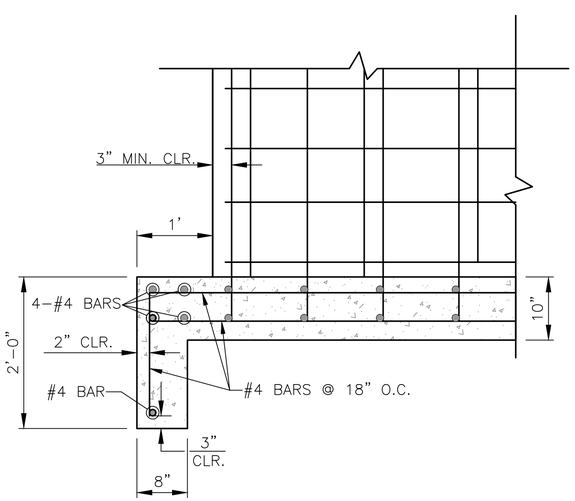

TOE WALL AT INLET OF CONCRETE CHANNEL AT STA. 200+59

SECTION A-A

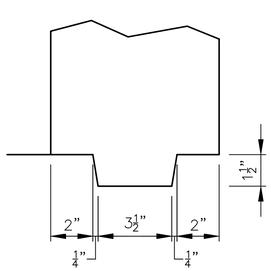

KEYWAY DETAIL

REVISIONS	DATE

CITY OF LITTLE ROCK, ARKANSAS
WEST 4TH STREET DRAINAGE AND STREET IMPROVEMENTS

SPECIAL DETAILS

DEPARTMENT OF PUBLIC WORKS
CIVIL ENGINEERING
701 W. MARKHAM
LITTLE ROCK, ARKANSAS 72201

DRAWN BY	JAW
DESIGNED	WMM
CHECKED	RCC
DATE	12-10-2019
SCALE	N.T.S
PROJECT NO.	03-17-DR-107
SHEET NO.	C15

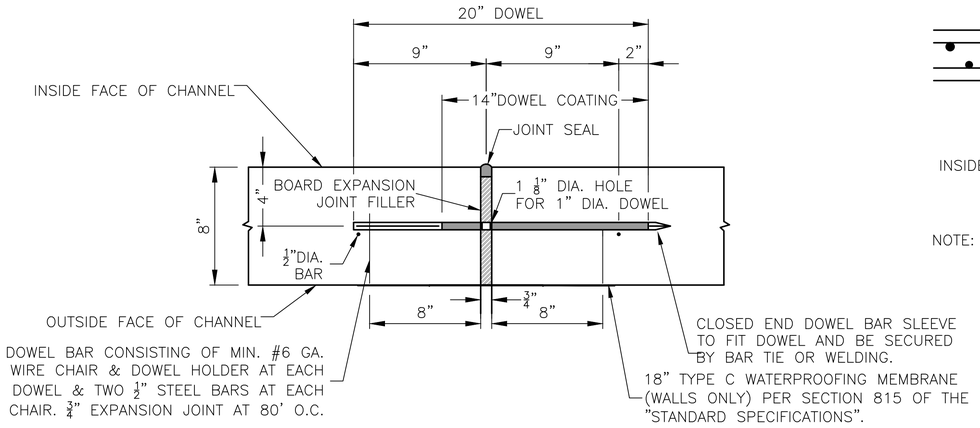

EXPANSION JOINT FOR CONCRETE CHANNEL
(DOWEL BARS TO BE 12" O.C.)

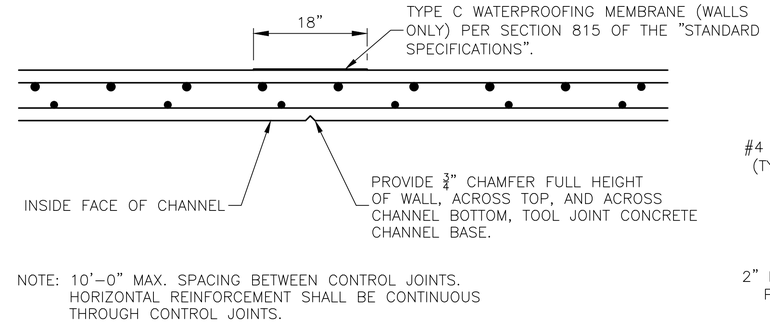

CONTROL JOINT FOR CONCRETE CHANNEL
(USED AT 10' O.C.)

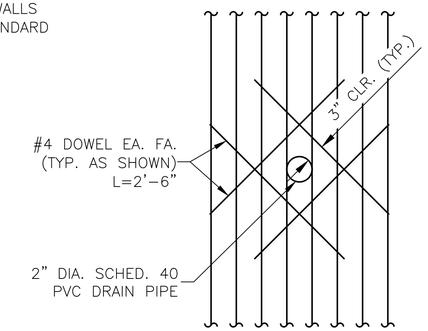

DRAIN PIPE REINFORCING DETAIL
FOR CONCRETE CHANNEL

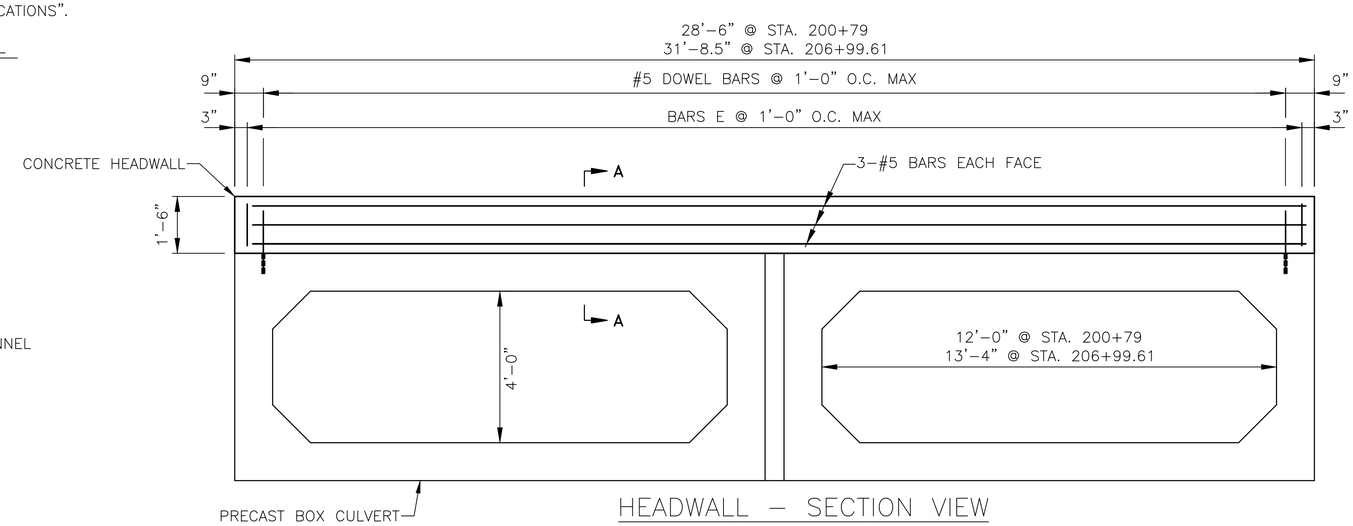

HEADWALL – SECTION VIEW
STA. 200+79
STA. 206+99.61

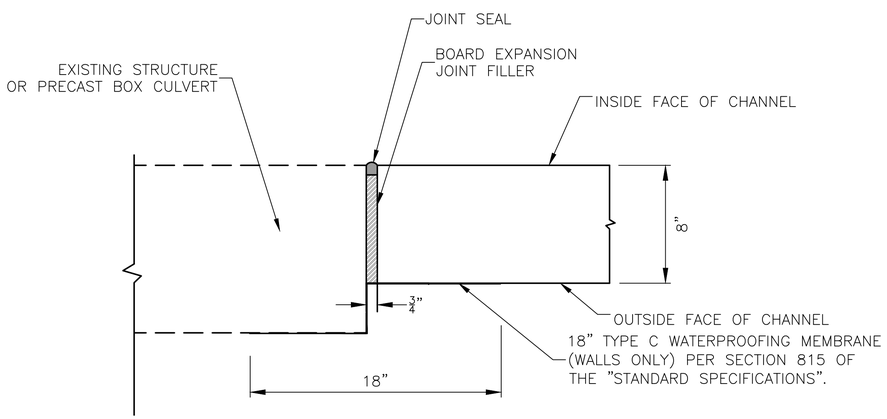

EXPANSION JOINT FOR CHANNEL
CONNECTION TO EXISTING STRUCTURES
STA. 200+79.00
STA. 206+99.61
STA. 207+40.13

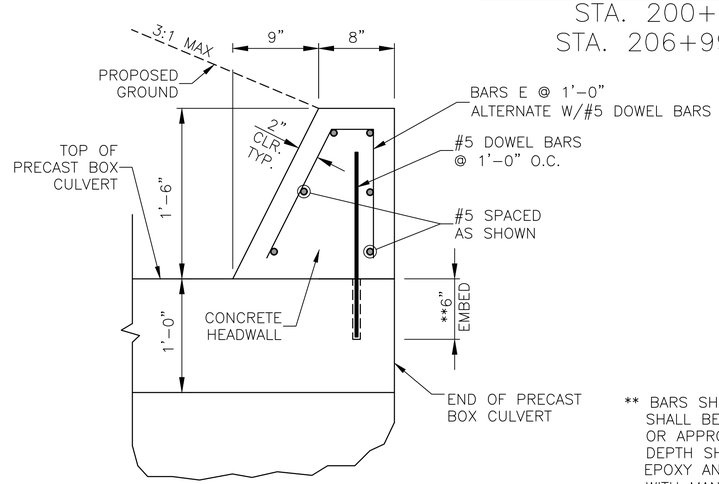

SECTION A–A

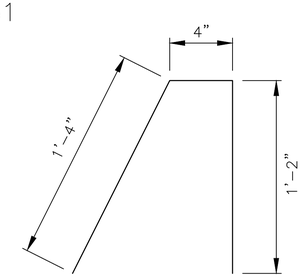

BARS E – #5

** BARS SHOWN TO BE EMBEDDED INTO PRECAST BOX CULVERT SHALL BE SECURED USING HILTI HIT RE500 EPOXY ANCHOR OR APPROVED EQUAL. ALL BARS SHALL BE EMBEDDED TO DEPTH SHOWN ON THE DETAILS ON THIS SHEET AND EPOXY EPOXY ANCHOR SHALL BE INSTALLED IN STRICT ACCORDANCE WITH MANUFACTURER'S INSTRUCTIONS. HOLES FOR EMBEDDED BARS SHALL BE DRILLED 1/4" LARGER IN DIAMETER THAN THE BAR.

REVISIONS	DATE

CITY OF LITTLE ROCK, ARKANSAS
WEST 4TH STREET DRAINAGE AND STREET IMPROVEMENTS

SPECIAL DETAILS

DEPARTMENT OF PUBLIC WORKS
CIVIL ENGINEERING
701 W. MARKHAM
LITTLE ROCK, ARKANSAS 72201

DRAWN BY	JAW
DESIGNED	WMM
CHECKED	RCC
DATE	12-10-2019
SCALE	N.T.S
PROJECT NO.	03-17-DR-107
SHEET NO.	C16

C.L. VALENTINE STREET			
STA.	TYPE	NORTHING	EASTING
50+00.00	BP	151465.2824	1218216.9646
52+00.00	PI	151265.3099	1218213.6510
53+50.00	EP	151115.3605	1218209.7534

C.L. VALMAR STREET			
STA.	TYPE	NORTHING	EASTING
100+00.00	BP	151344.5432	1218551.5530
104+00.00	EP	150944.6272	1218543.3566

C.L. BOX CULVERT COORDINATES			
STA.	TYPE	NORTHING	EASTING
200+00.00	BP	151374.6247	1218119.6053
201+67.45	PI	151266.6012	1218247.5511
204+57.62	PI	151245.4806	1218536.9481
204+75.88	PI	151231.9776	1218549.2459
206+64.01	PI	151043.8851	1218545.3909
206+77.56	PI	151032.2486	1218552.3348
207+12.70	PI	151016.2008	1218583.5952
208+27.55	PC	151007.5550	1218698.1183
208+36.54	PI	151006.8782	1218707.0843
208+42.20	PT	150997.8909	1218707.3608
208+68.10	PI	150972.0034	1218708.1571
209+25	EP	150915.1066	1218707.3197

C.L. WEST 4TH STREET			
STA.	TYPE	NORTHING	EASTING
10+00.00	BP	151354.0364	1218099.2957
10+97.51	PC	151291.1327	1218173.8003
11+30.00	PI	151270.1717	1218198.6270
11+60.34	PT	151267.8067	1218231.0328
13+55.85	PI	151253.5761	1218426.0223
17+29.85	EP	151231.9544	1218799.3967

C.L. WEST CAPITOL AVENUE			
STA.	TYPE	NORTHING	EASTING
300+00.00	BP	150891.9374	1218660.3758
302+50.00	EP	150877.0372	1218909.9314

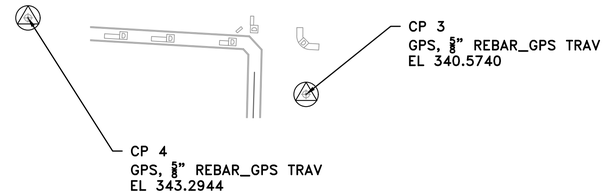

SURVEY BENCHMARKS				
NO.	DESCRIPTION	NORTHING	EASTING	ELEV.
1	GPS, PK NAIL_GPS TRAV	151248.7634	1218716.2452	327.5054
2	GPS, 5/8" REBAR_GPS TRAV	151257.2462	1218188.5595	332.1646
3	GPS, 5/8" REBAR_GPS TRAV	151748.0133	1218244.0700	340.5740
4	GPS, 5/8" REBAR_GPS TRAV	151798.4730	1218060.5584	343.2944

Basis of Bearings:
All Coordinates are Ground.
For Stakeout use CF = 1.00000000
Job CAF = 1.000029763
Job CAF was established at Control Point 2.
Convergence Angle at Control Point 2 is 00°10'56.20651" Left.
To convert back to GRID multiply by Job CAF = 1.000029763
Point 2 Latitude = N 34°44'54.56684"
Point 2 Longitude = W 092°18'47.69804"
Original Grid Coordinates based on Arkansas Grid North Zone 0301
As determined by GPS RTK readings on February 21, 2019 based upon the PAGIS Dial-Up System.
Horizontal Datum: NAD 83
Vertical Datum: NAVD 88
Grid Coordinates were projected to Ground using Job CAF = 1.000029763.
Elevations for project based upon GPS RTK readings to Control Point 3.
Job Location is South Valentine Street in Little Rock, Pulaski County, Arkansas

CONTROL POINT

Basis of Bearing: PAGIS Virtual R
State Plane North reduced to grox
point No. 2: Geoid 12B

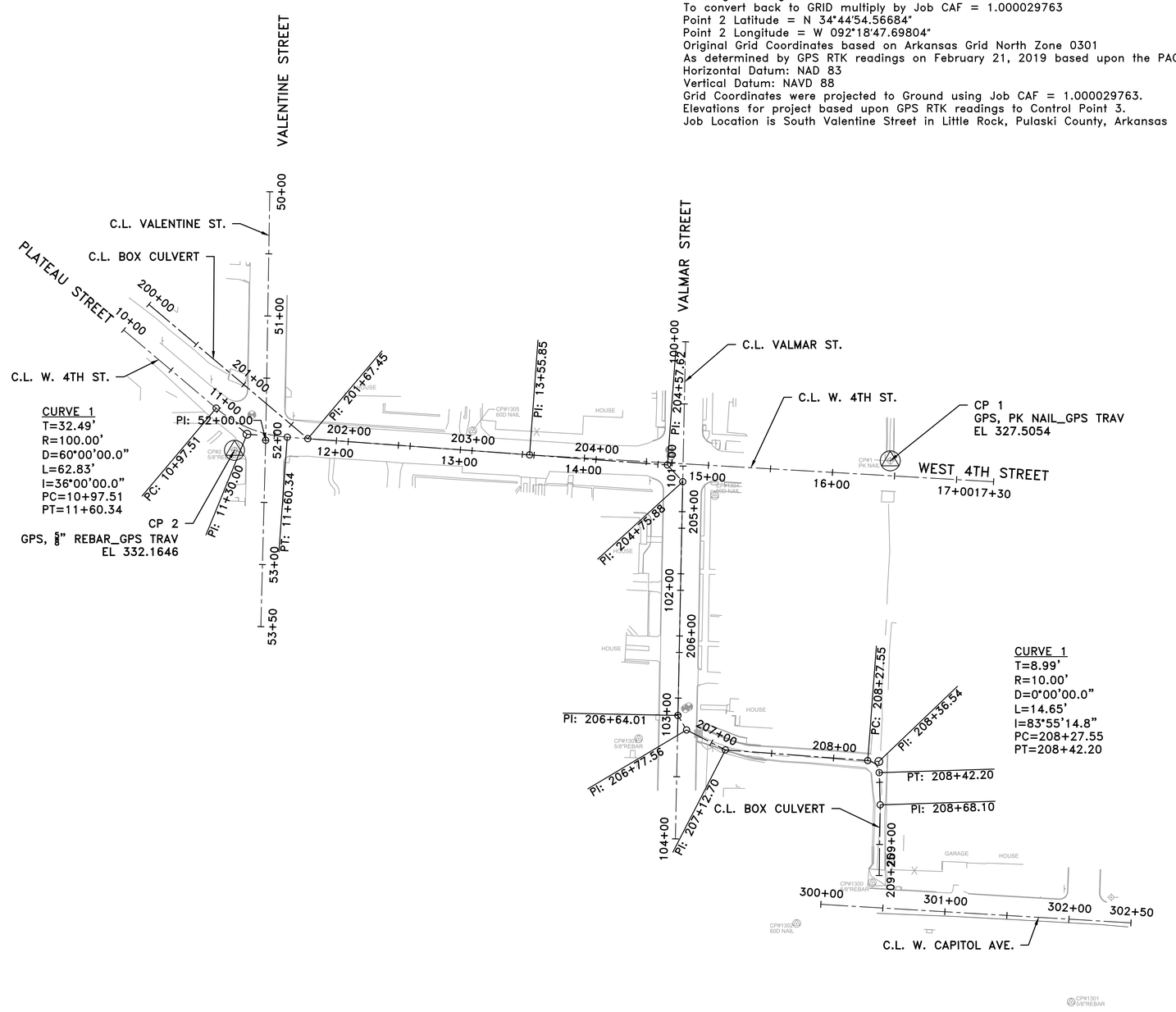

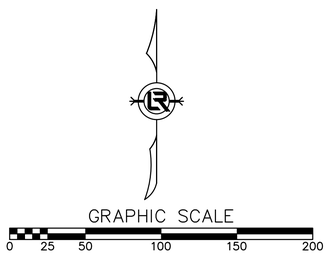

REVISIONS	DATE

CITY OF LITTLE ROCK, ARKANSAS
WEST 4TH STREET DRAINAGE
AND STREET IMPROVEMENTS

FIELD TIES / LAYOUT

DEPARTMENT OF PUBLIC WORKS
CIVIL ENGINEERING
701 W. MARKHAM
LITTLE ROCK, ARKANSAS 72201

DRAWN BY	MJM
DESIGNED	RCC
CHECKED	RCC
DATE	12-10-2019
SCALE	H: 1"=50' V: 1"=50'
PROJECT NO.	03-17-DR-107
SHEET NO.	C17

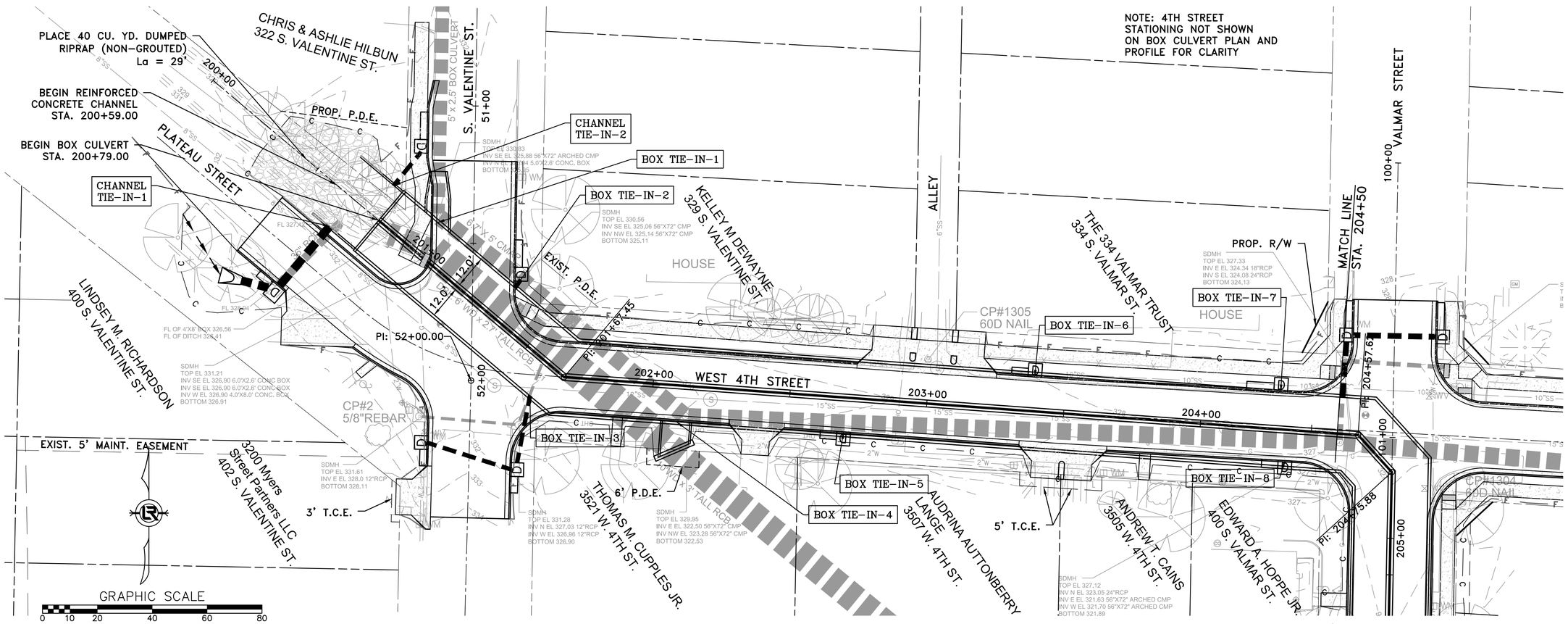

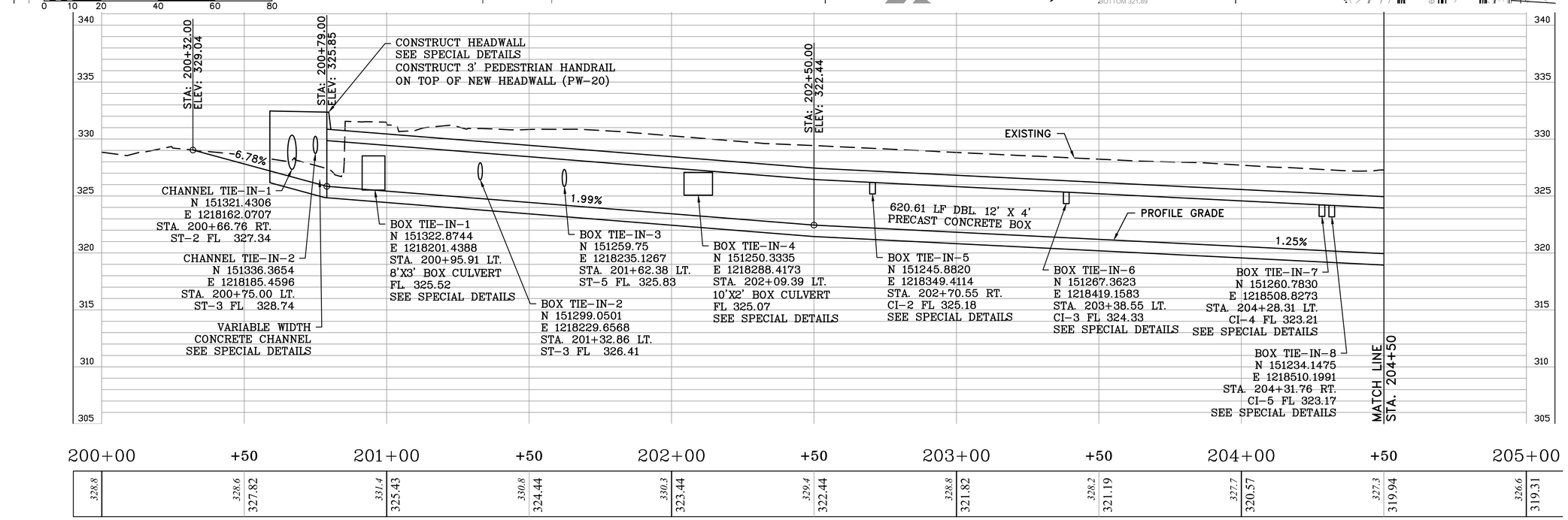

ALIGNMENT – BOX CULVERT

REVISIONS	DATE

CITY OF LITTLE ROCK, ARKANSAS
WEST 4TH STREET DRAINAGE AND STREET IMPROVEMENTS

BOX CULVERT 1
PLAN & PROFILE - STA 200+00 TO STA 204+50

DEPARTMENT OF PUBLIC WORKS
CIVIL ENGINEERING
701 W. MARKHAM
LITTLE ROCK, ARKANSAS 72201

DRAWN BY	MJM
DESIGNED	RCC
CHECKED	RCC
DATE	12-10-2019
SCALE	H: 1"=20' V: 1"=5'
PROJECT NO.	03-17-DR-107
SHEET NO.	C18

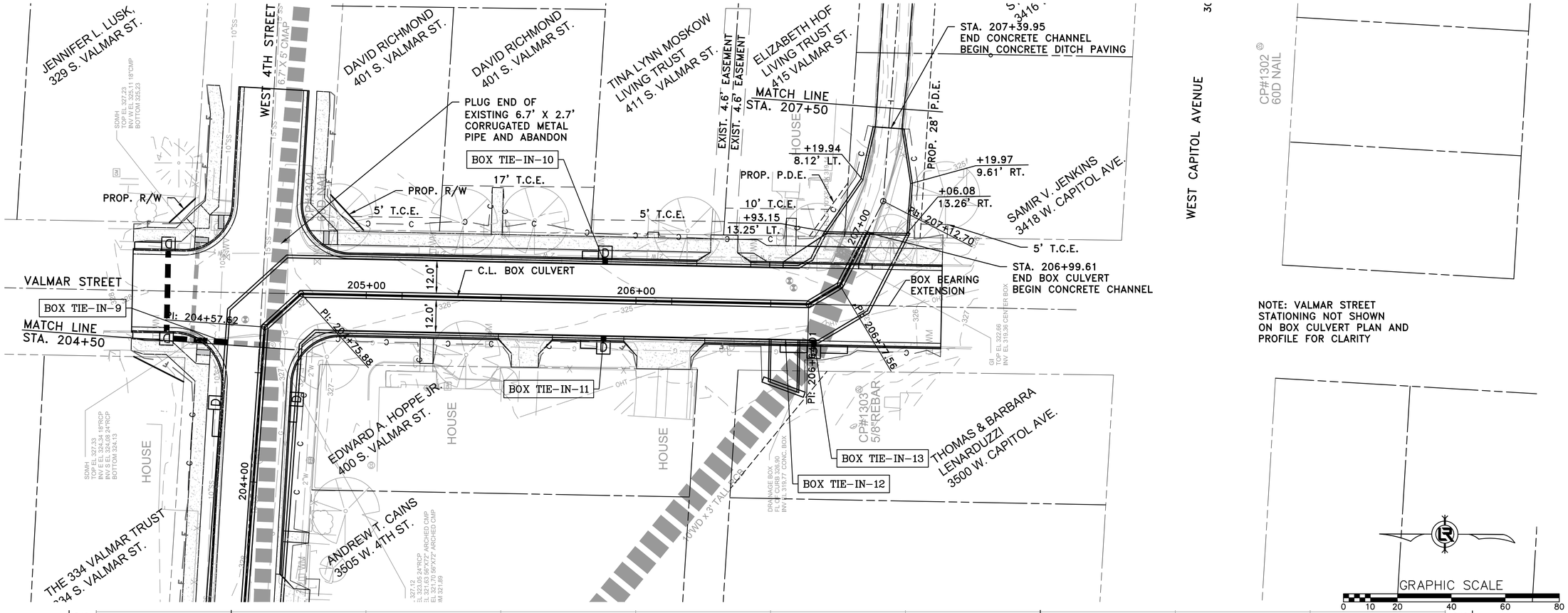

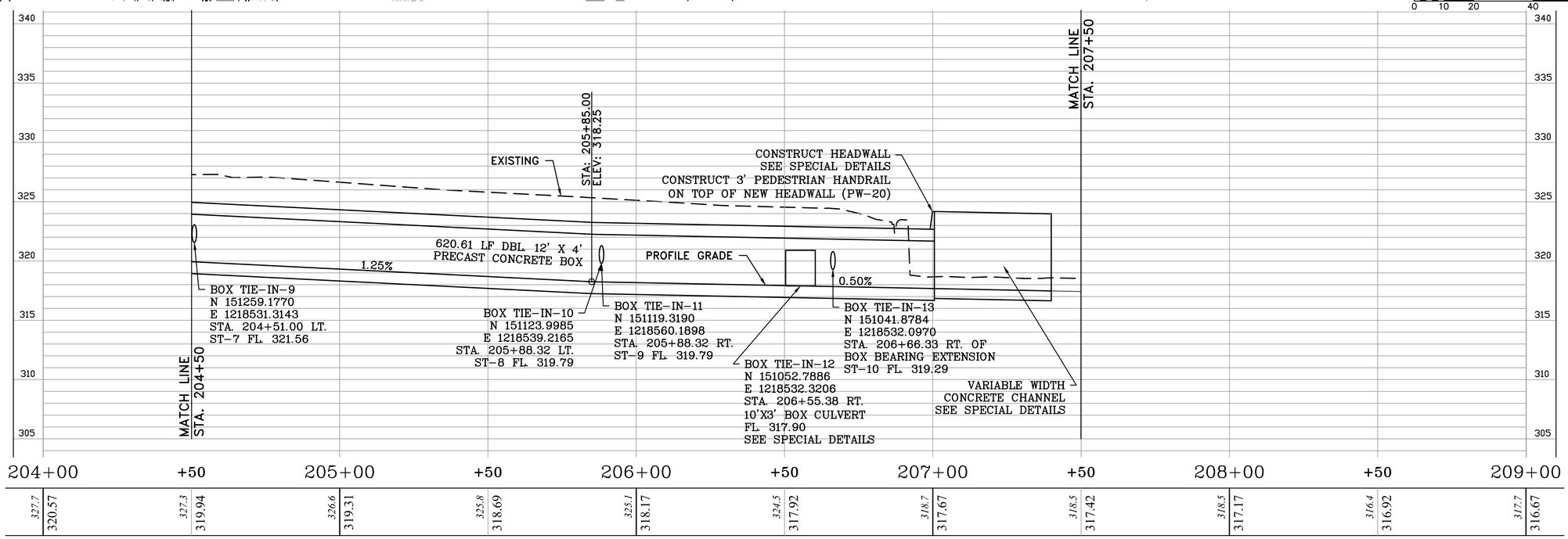

ALIGNMENT – BOX CULVERT

REVISIONS	DATE

CITY OF LITTLE ROCK, ARKANSAS
WEST 4TH STREET DRAINAGE AND STREET IMPROVEMENTS

BOX CULVERT 2

PLAN & PROFILE - STA 204+50 TO STA 207+50

DEPARTMENT OF PUBLIC WORKS
CIVIL ENGINEERING
701 W. MARKHAM
LITTLE ROCK, ARKANSAS 72201

DRAWN BY	MJM
DESIGNED	RCC
CHECKED	RCC
DATE	12-10-2019
SCALE	H: 1"=20' V: 1"=5'
PROJECT NO.	03-17-DR-107
SHEET NO.	C19

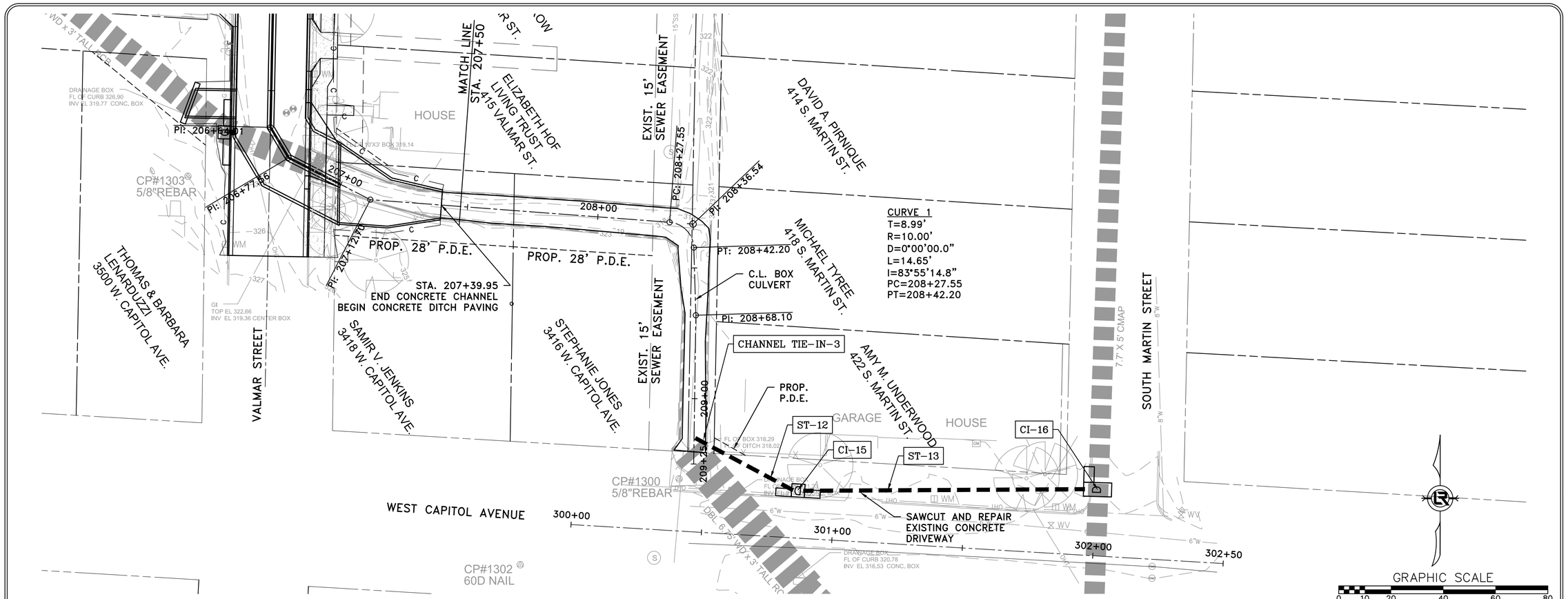

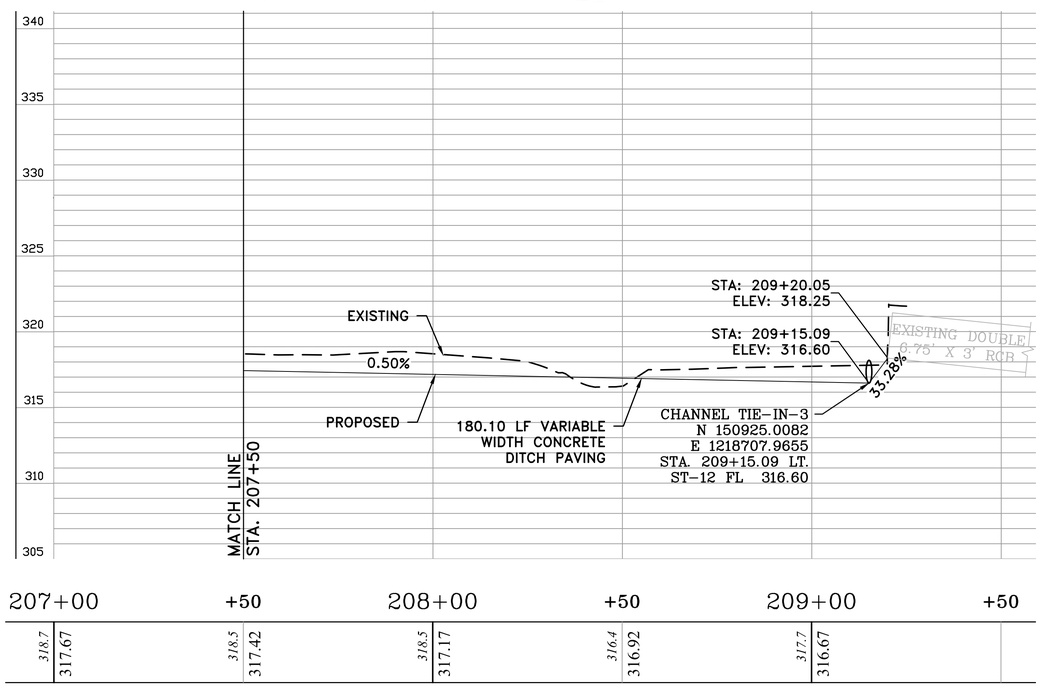

ALIGNMENT – BOX CULVERT

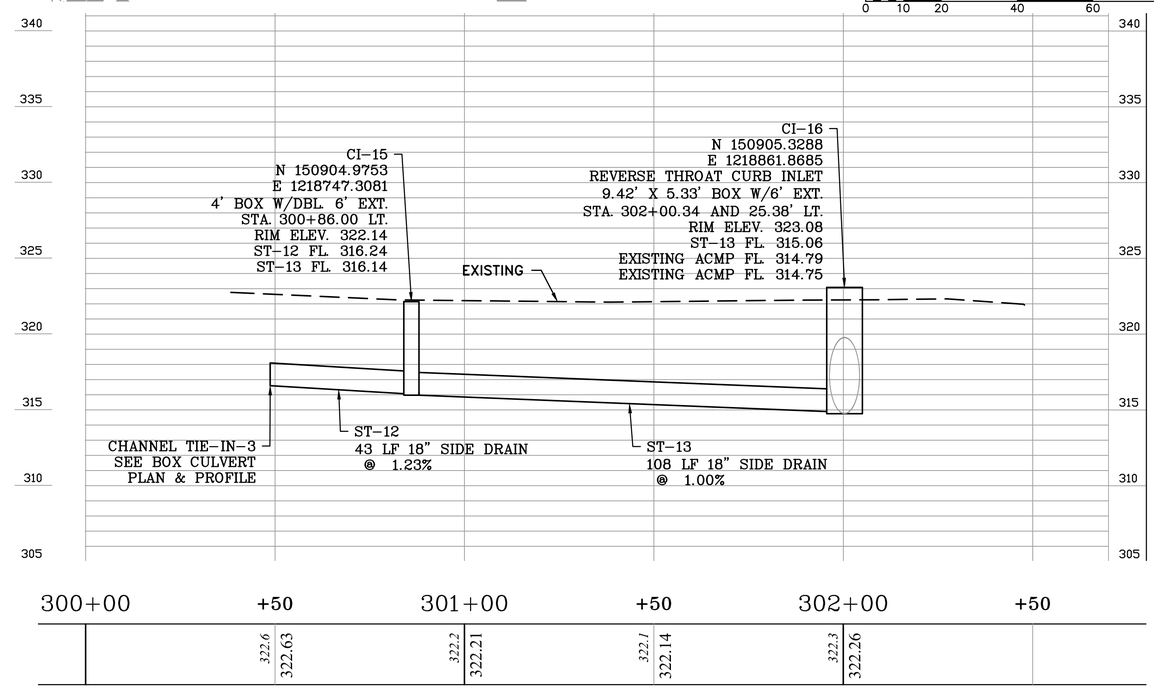

ALIGNMENT – CAPITOL AVE

REVISIONS	DATE

CITY OF LITTLE ROCK, ARKANSAS
WEST 4TH STREET DRAINAGE AND STREET IMPROVEMENTS

BOX CULVERT 3

PLAN & PROFILE - STA 207+50 TO STA 209+27

DEPARTMENT OF PUBLIC WORKS
CIVIL ENGINEERING
701 W. MARKHAM
LITTLE ROCK, ARKANSAS 72201

DRAWN BY	MJM
DESIGNED	RCC
CHECKED	RCC
DATE	12-10-2019
SCALE	H: 1"=20' V: 1"=5'
PROJECT NO.	03-17-DR-107
SHEET NO.	C20

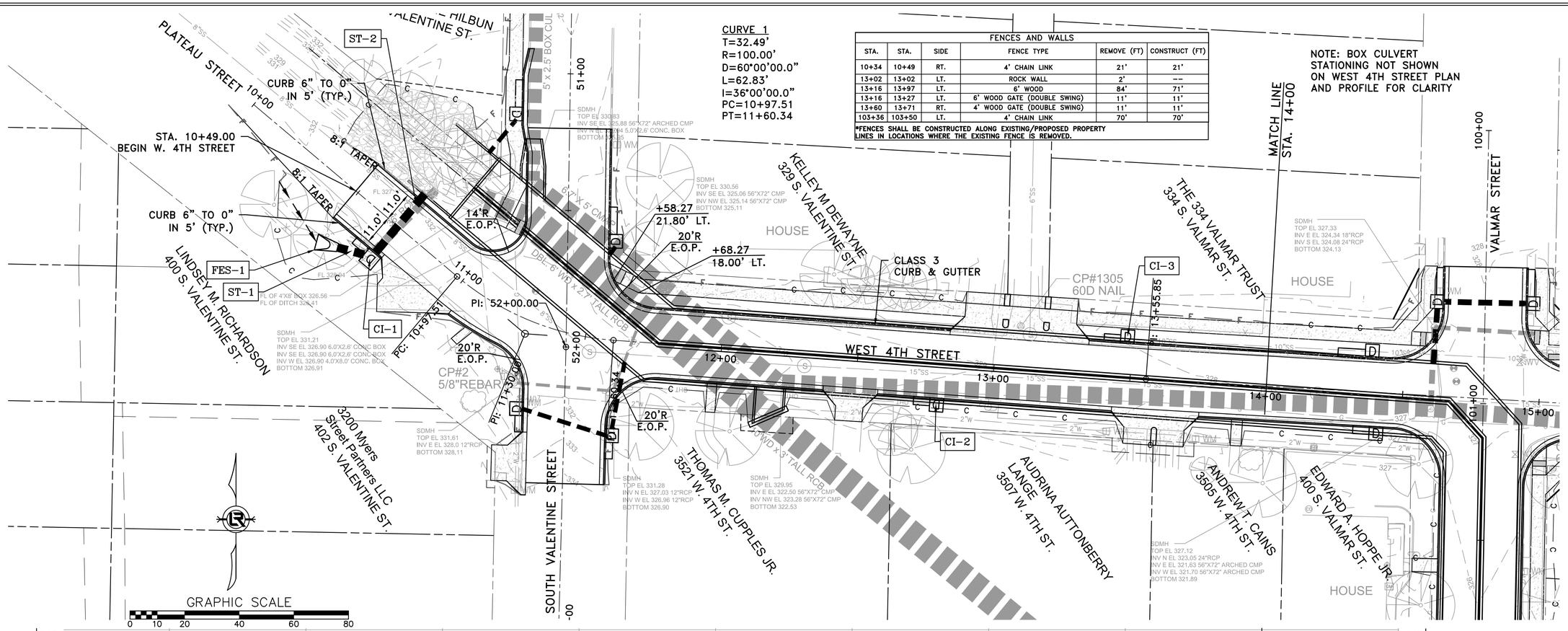

FENCES AND WALLS					
STA.	STA.	SIDE	FENCE TYPE	REMOVE (FT)	CONSTRUCT (FT)
10+34	10+49	RT.	4' CHAIN LINK	21'	21'
13+02	13+02	LT.	ROCK WALL	2'	--
13+16	13+97	LT.	6' WOOD	84'	71'
13+16	13+27	LT.	6' WOOD GATE (DOUBLE SWING)	11'	11'
13+60	13+71	RT.	4' WOOD GATE (DOUBLE SWING)	11'	11'
103+36	103+50	LT.	4' CHAIN LINK	70'	70'

*FENCES SHALL BE CONSTRUCTED ALONG EXISTING/PROPOSED PROPERTY LINES IN LOCATIONS WHERE THE EXISTING FENCE IS REMOVED.

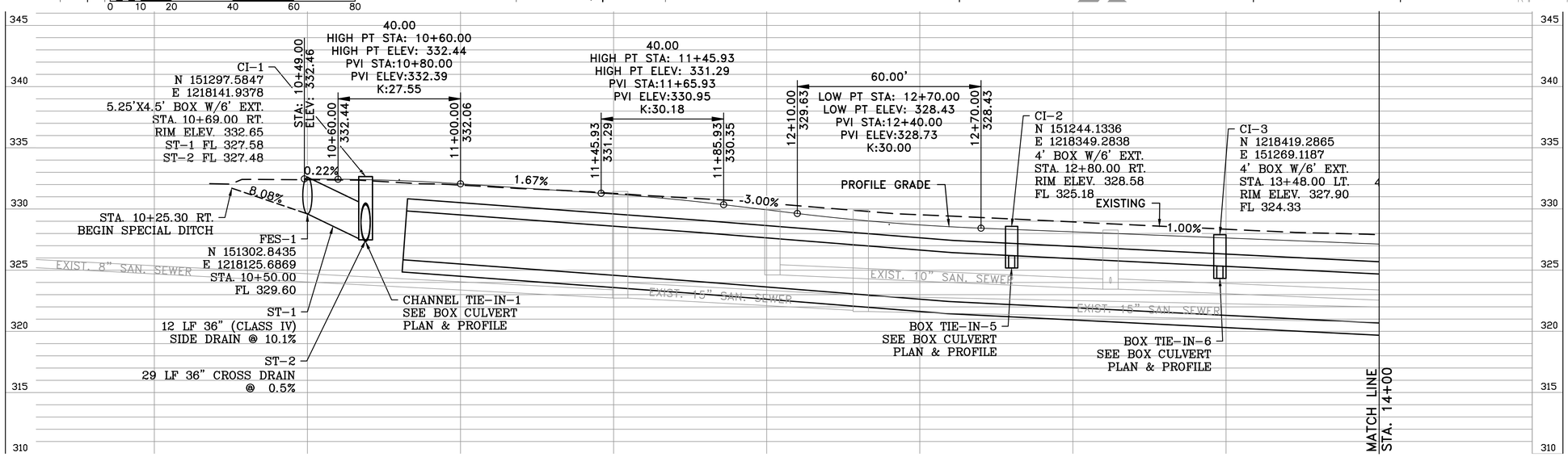

10+00	+50	11+00	+50	12+00	+50	13+00	+50	14+00	+50
332.4 / 332.46		332.0 / 332.06		331.3 / 331.22		330.5 / 329.93		329.5 / 328.70	
328.9 / 328.13		328.3 / 327.63		327.9 / 327.13		327.2 / 326.63			

ALIGNMENT – W 4TH STREET

REVISIONS	DATE

CITY OF LITTLE ROCK, ARKANSAS
WEST 4TH STREET DRAINAGE AND STREET IMPROVEMENTS

WEST 4TH STREET 1
PLAN & PROFILE - STA 10+00 TO STA 14+00

DEPARTMENT OF PUBLIC WORKS
CIVIL ENGINEERING
701 W. MARKHAM
LITTLE ROCK, ARKANSAS 72201

DRAWN BY	MJM
DESIGNED	RCC
CHECKED	RCC
DATE	12-10-2019
SCALE	H: 1"=20' V: 1"=5'
PROJECT NO.	03-17-DR-107
SHEET NO.	C21

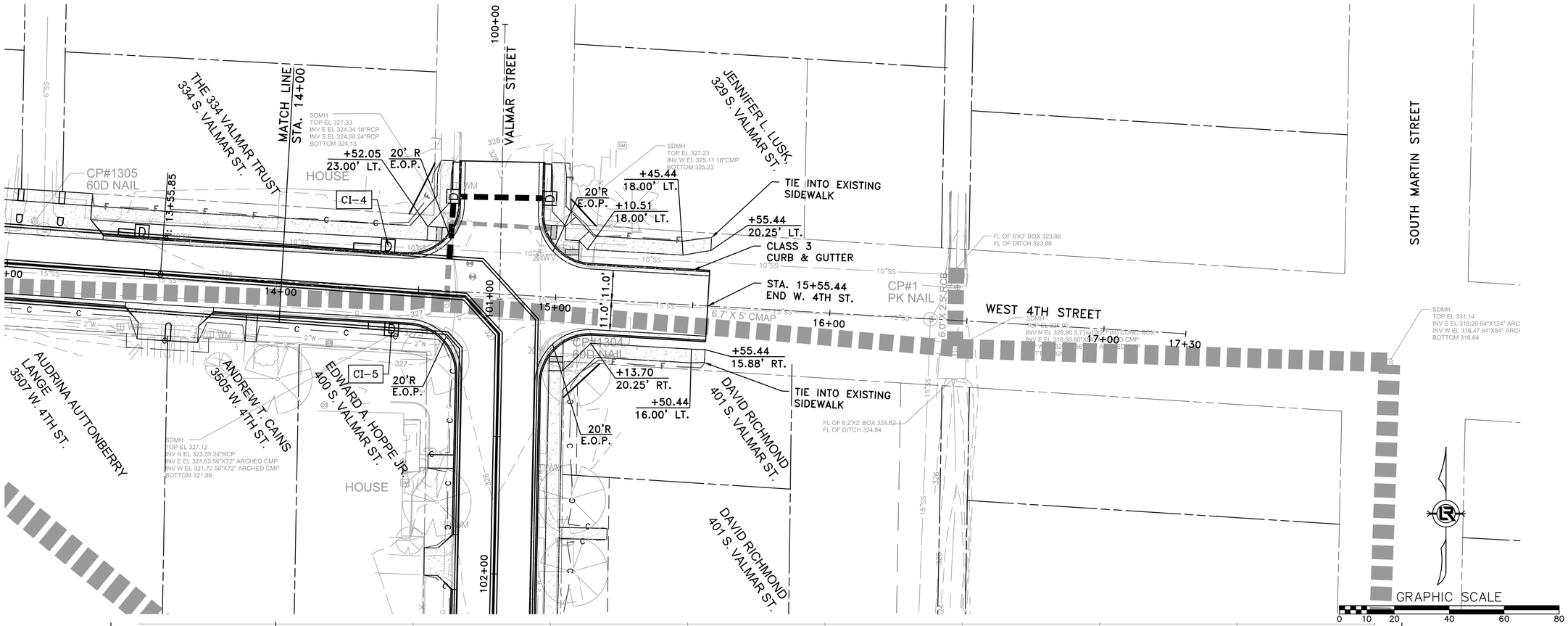

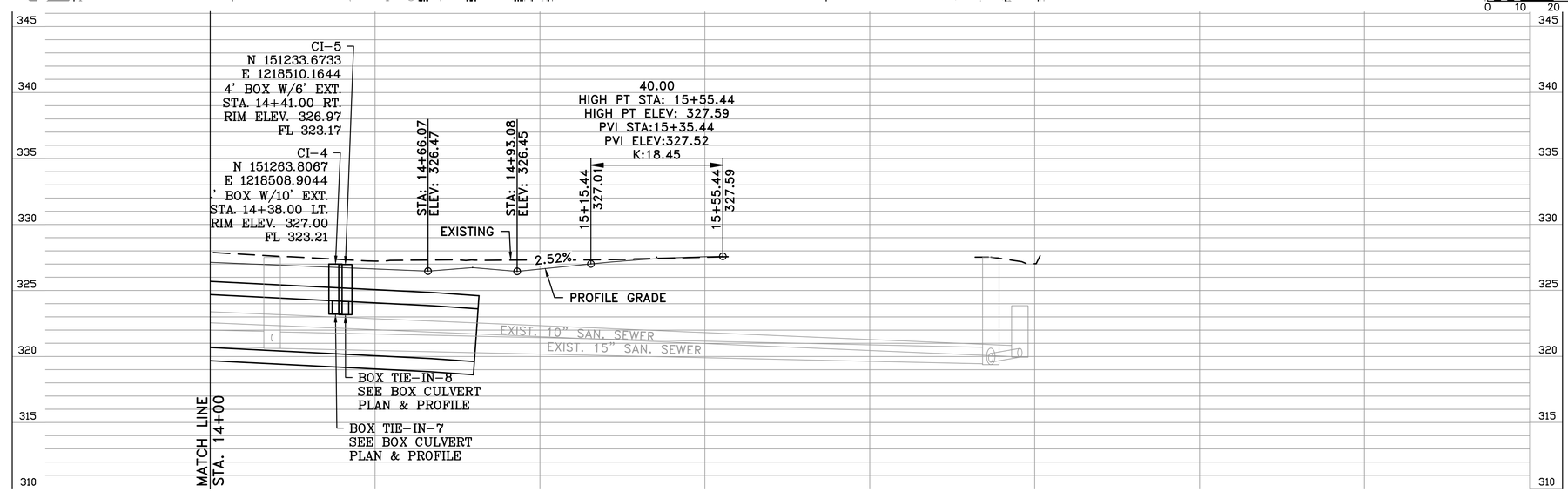

ALIGNMENT – W 4TH STREET

REVISIONS	DATE

CITY OF LITTLE ROCK, ARKANSAS
WEST 4TH STREET DRAINAGE AND STREET IMPROVEMENTS

WEST 4TH STREET 2
PLAN & PROFILE - STA 14+00 TO STA 17+32

DEPARTMENT OF PUBLIC WORKS
CIVIL ENGINEERING
701 W. MARKHAM
LITTLE ROCK, ARKANSAS 72201

DRAWN BY	MJM
DESIGNED	RCC
CHECKED	RCC
DATE	12-10-2019
SCALE	H: 1"=20' V: 1"=5'
PROJECT NO.	03-17-DR-107
SHEET NO.	C22

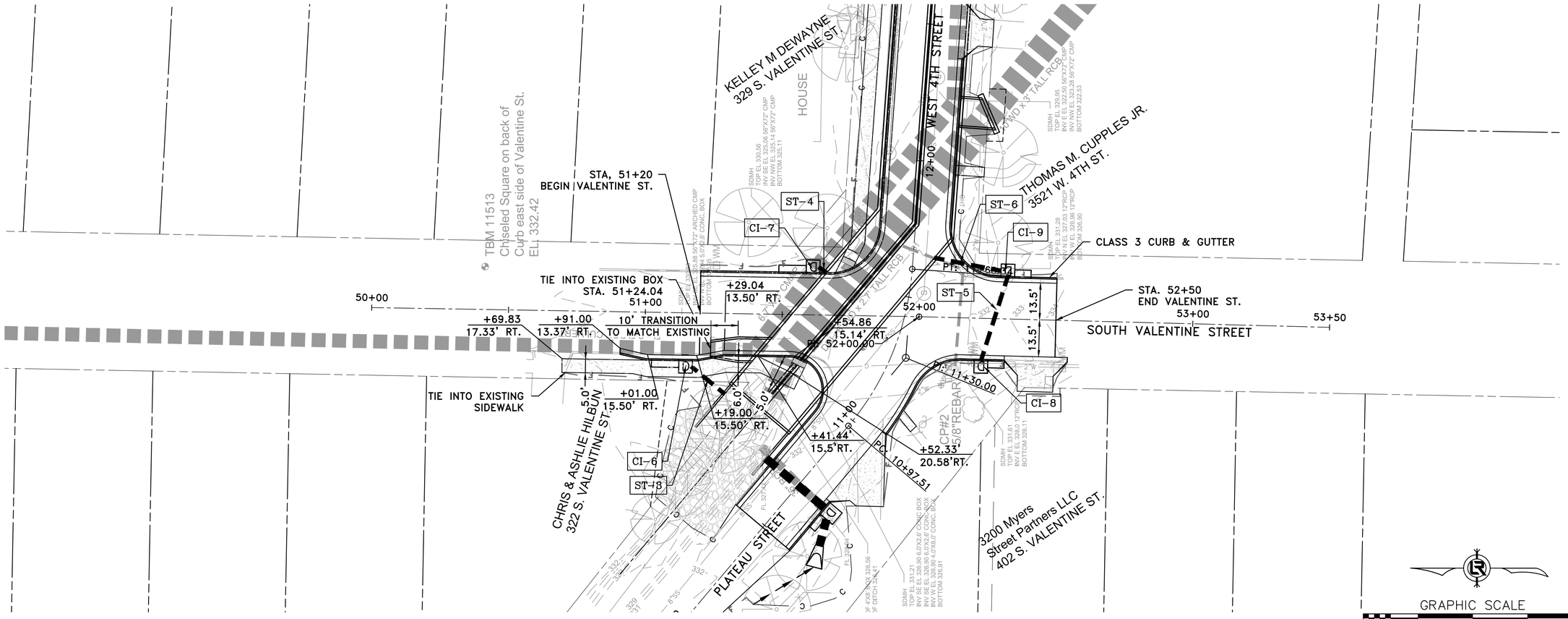

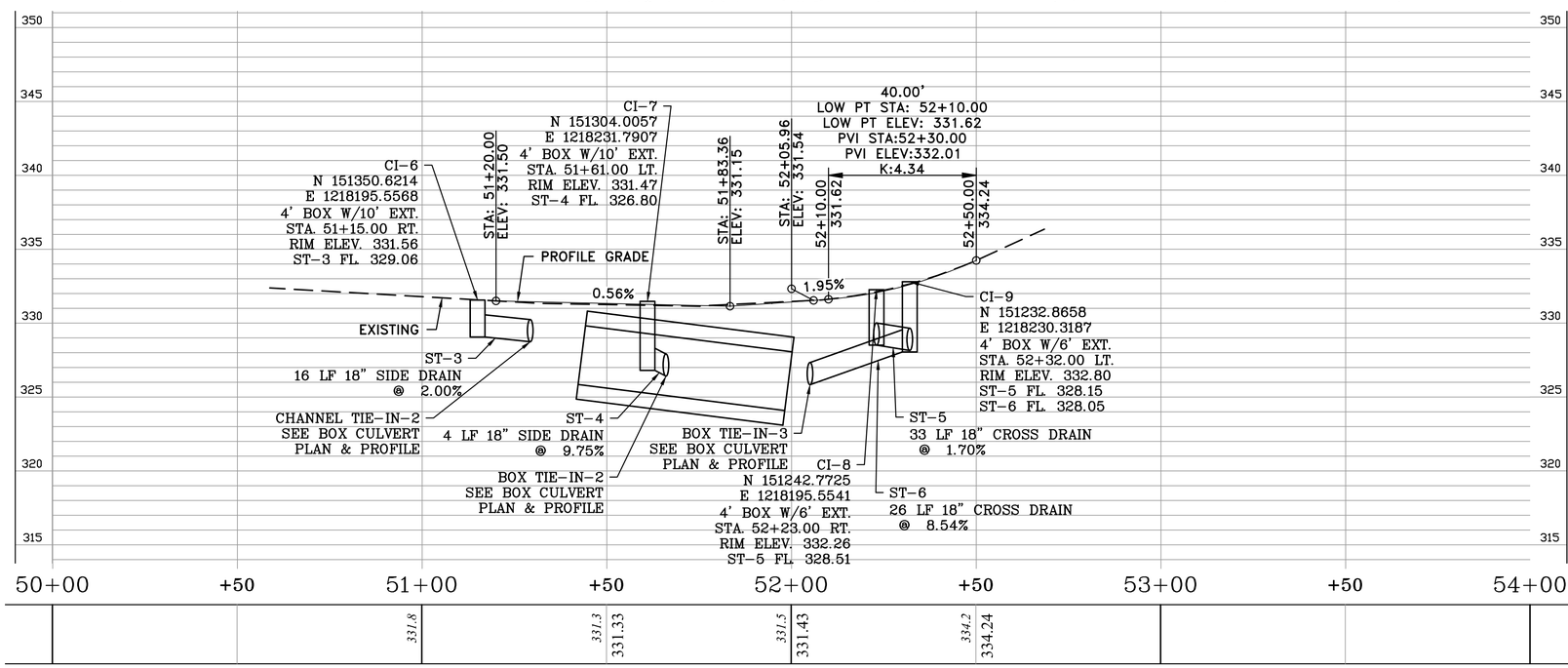

ALIGNMENT – VALENTINE STREET

REVISIONS	DATE

CITY OF LITTLE ROCK, ARKANSAS
WEST 4TH STREET DRAINAGE AND STREET IMPROVEMENTS

SOUTH VALENTINE STREET
PLAN & PROFILE - STA 50+00 TO STA 53+50

DEPARTMENT OF PUBLIC WORKS
CIVIL ENGINEERING
701 W. MARKHAM
LITTLE ROCK, ARKANSAS 72201

DRAWN BY	MJM
DESIGNED	RCC
CHECKED	RCC
DATE	12-10-2019
SCALE	H: 1"=20' V: 1"=5'
PROJECT NO.	03-17-DR-107
SHEET NO.	C23

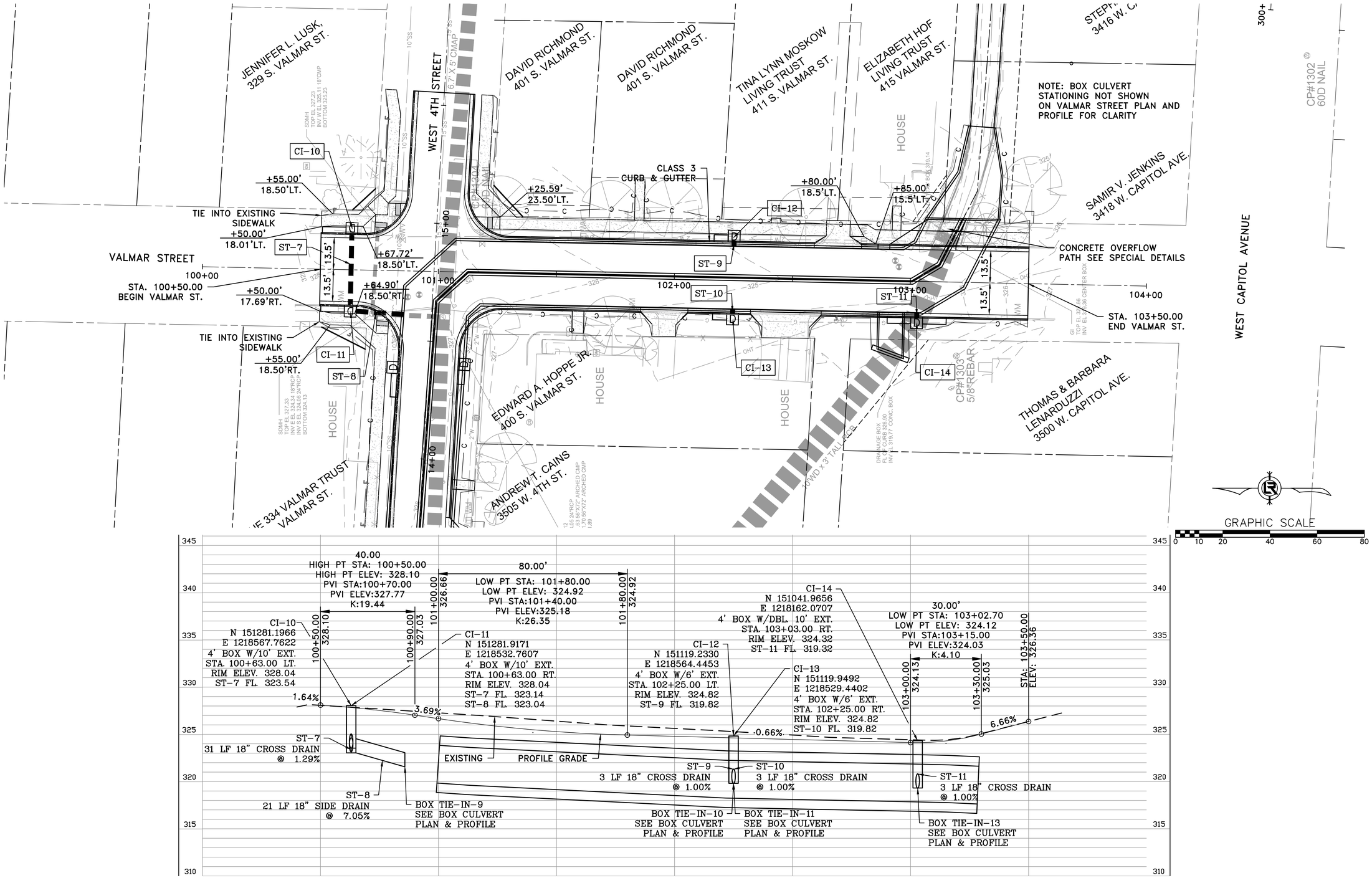

ALIGNMENT – VALMAR STREET

REVISIONS	DATE

CITY OF LITTLE ROCK, ARKANSAS
WEST 4TH STREET DRAINAGE AND STREET IMPROVEMENTS

VALMAR STREET
PLAN & PROFILE - STA 100+00 TO STA 104+00

DEPARTMENT OF PUBLIC WORKS
CIVIL ENGINEERING
701 W. MARKHAM
LITTLE ROCK, ARKANSAS 72201

DRAWN BY	MJM
DESIGNED	RCC
CHECKED	RCC
DATE	12-10-2019
SCALE	H: 1"=20' V: 1"=5'
PROJECT NO.	03-17-DR-107
SHEET NO.	C24

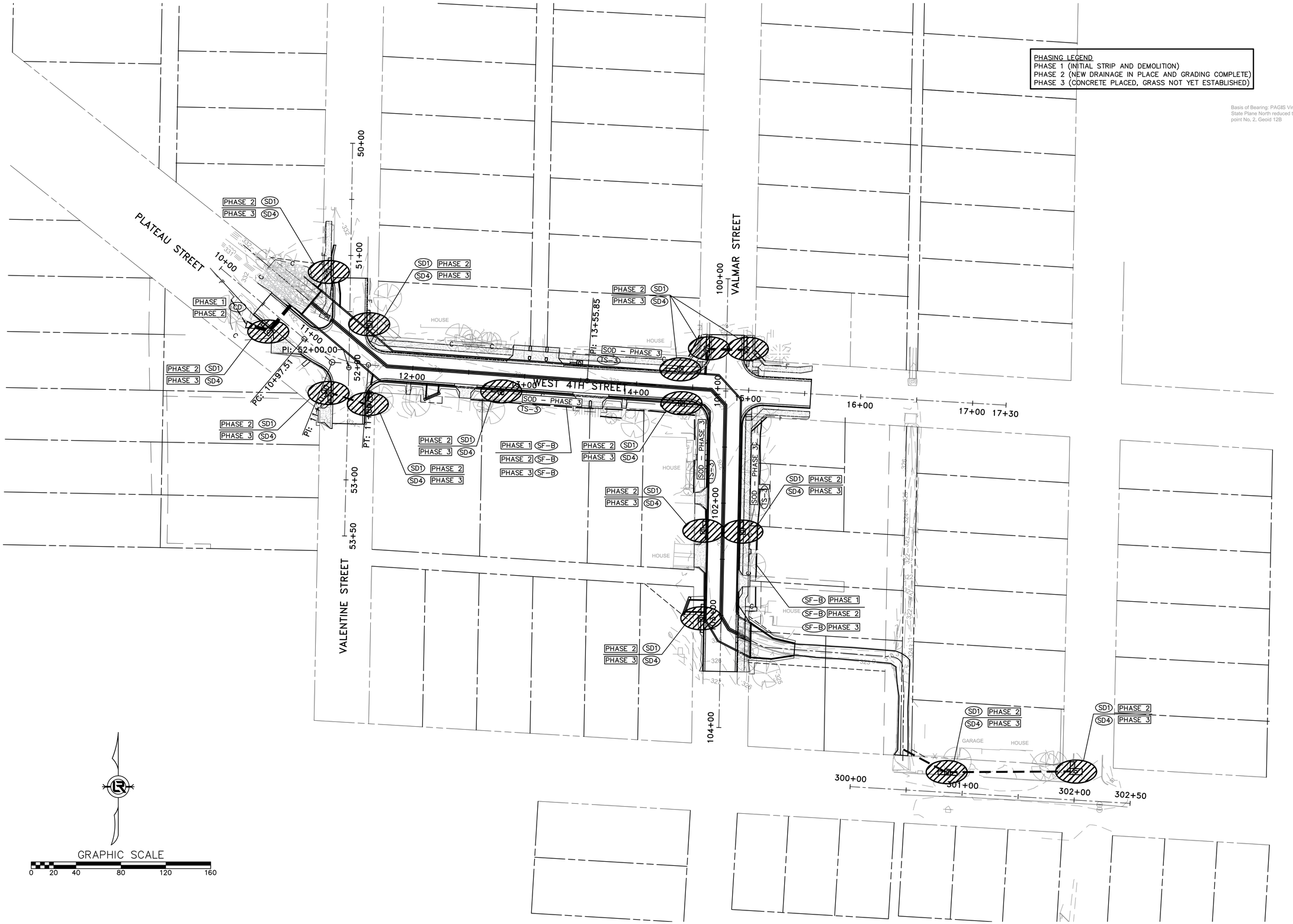

REVISIONS	DATE

CITY OF LITTLE ROCK, ARKANSAS
WEST 4TH STREET DRAINAGE
AND STREET IMPROVEMENTS

EROSION CONTROL

DEPARTMENT OF PUBLIC WORKS
CIVIL ENGINEERING
701 W. MARKHAM
LITTLE ROCK, ARKANSAS 72201

DRAWN BY	MJM
DESIGNED	MJM
CHECKED	RCC
DATE	12-10-2019
SCALE	H: 1"=40' V: 1"=40'
PROJECT NO.	03-17-DR-107
SHEET NO.	C25

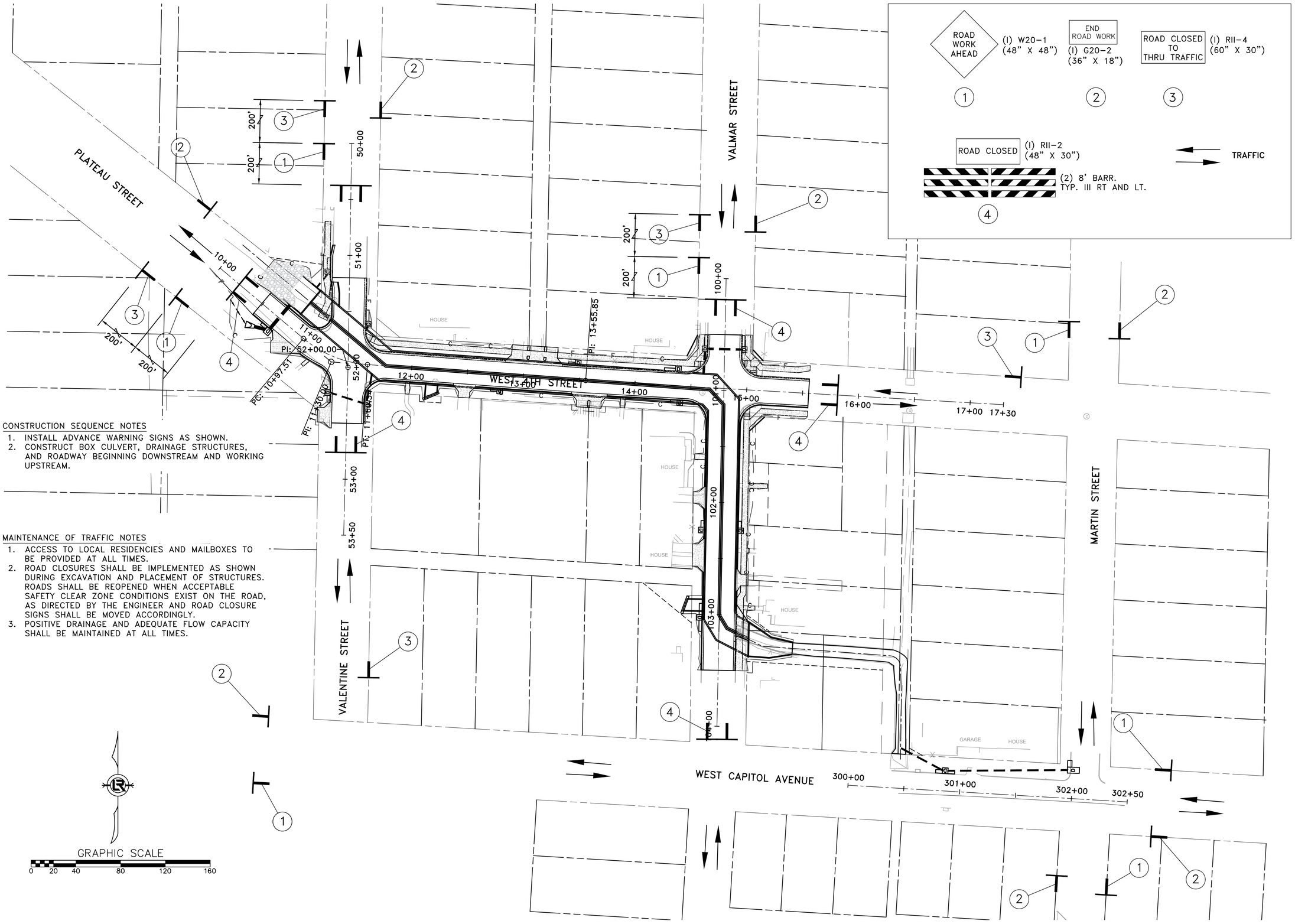

CONSTRUCTION SEQUENCE NOTES

1. INSTALL ADVANCE WARNING SIGNS AS SHOWN.
2. CONSTRUCT BOX CULVERT, DRAINAGE STRUCTURES, AND ROADWAY BEGINNING DOWNSTREAM AND WORKING UPSTREAM.

MAINTENANCE OF TRAFFIC NOTES

1. ACCESS TO LOCAL RESIDENCIES AND MAILBOXES TO BE PROVIDED AT ALL TIMES.
2. ROAD CLOSURES SHALL BE IMPLEMENTED AS SHOWN DURING EXCAVATION AND PLACEMENT OF STRUCTURES. ROADS SHALL BE REOPENED WHEN ACCEPTABLE SAFETY CLEAR ZONE CONDITIONS EXIST ON THE ROAD, AS DIRECTED BY THE ENGINEER AND ROAD CLOSURE SIGNS SHALL BE MOVED ACCORDINGLY.
3. POSITIVE DRAINAGE AND ADEQUATE FLOW CAPACITY SHALL BE MAINTAINED AT ALL TIMES.

REVISIONS	DATE

CITY OF LITTLE ROCK, ARKANSAS
WEST 4TH STREET DRAINAGE AND STREET IMPROVEMENTS

MAINTENANCE OF TRAFFIC

DEPARTMENT OF PUBLIC WORKS
CIVIL ENGINEERING
701 W. MARKHAM
LITTLE ROCK, ARKANSAS 72201

DRAWN BY	MJM
DESIGNED	MJM
CHECKED	RCC
DATE	12-10-2019
SCALE	H: 1"=40' V: 1"=40'
PROJECT NO.	03-17-DR-107
SHEET NO.	C26

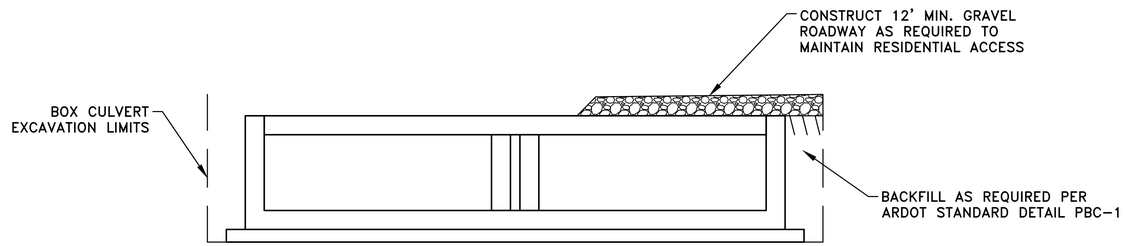

DETAIL A

NOTE:
AGGREGATE USED FOR MAINTENANCE OF TRAFFIC AND NOT USED WITHIN THE PERMANENT ROADWAY BASE OR BOX CULVERT SHALL BE CONSIDERED SUBSIDIARY TO THE LUMP SUM PRICE BID FOR MAINTENANCE OF TRAFFIC.

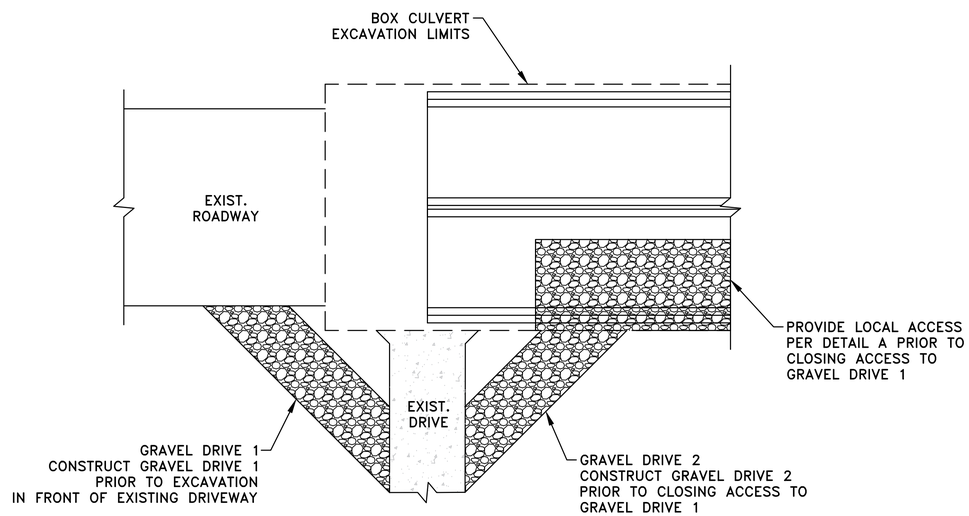

TYPICAL MAINTENANCE OF
RESIDENTIAL ACCESS DETAIL

REVISIONS	DATE

CITY OF LITTLE ROCK, ARKANSAS
WEST 4TH STREET DRAINAGE
AND STREET IMPROVEMENTS

MAINTENANCE OF TRAFFIC

DEPARTMENT OF PUBLIC WORKS
CIVIL ENGINEERING
701 W. MARKHAM
LITTLE ROCK, ARKANSAS 72201

DRAWN BY	JAW
DESIGNED	RCC
CHECKED	RCC
DATE	12-10-2019
SCALE	N.T.S
PROJECT NO.	03-17-DR-107
SHEET NO.	C27

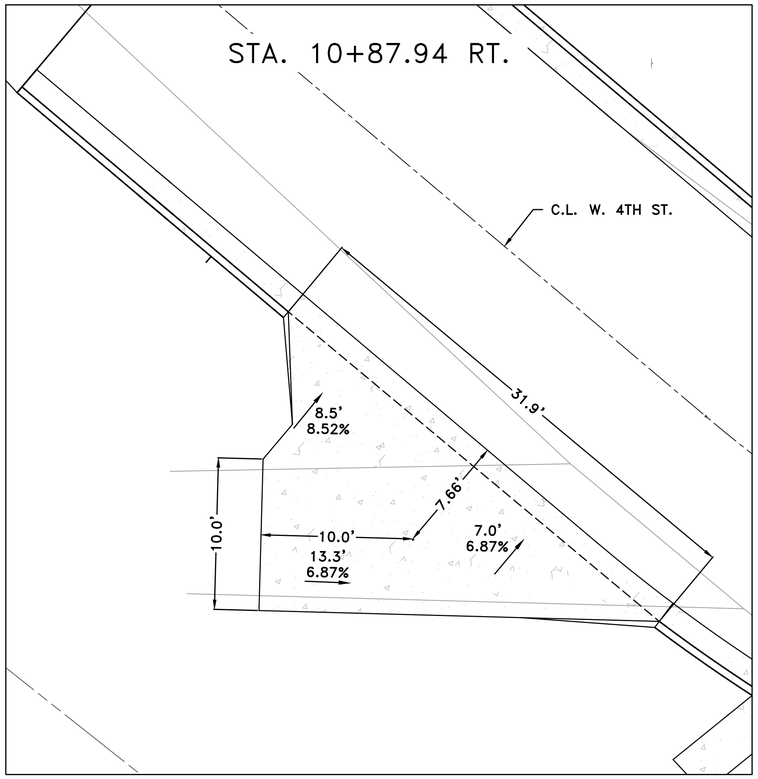

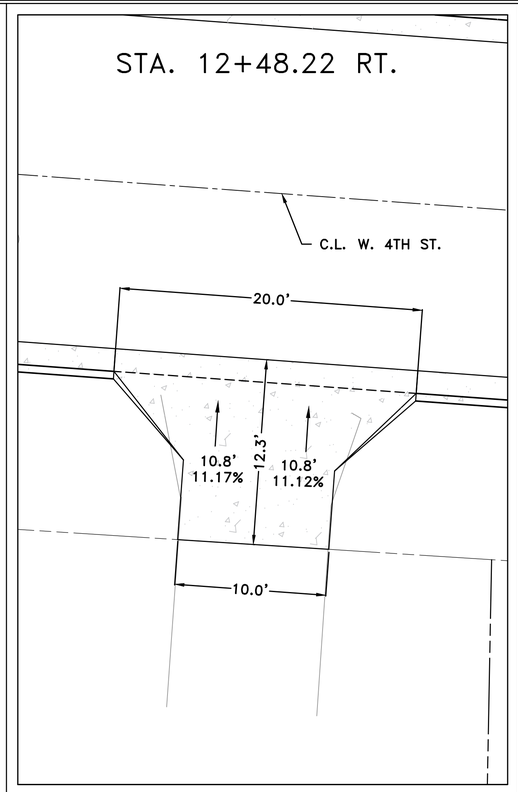

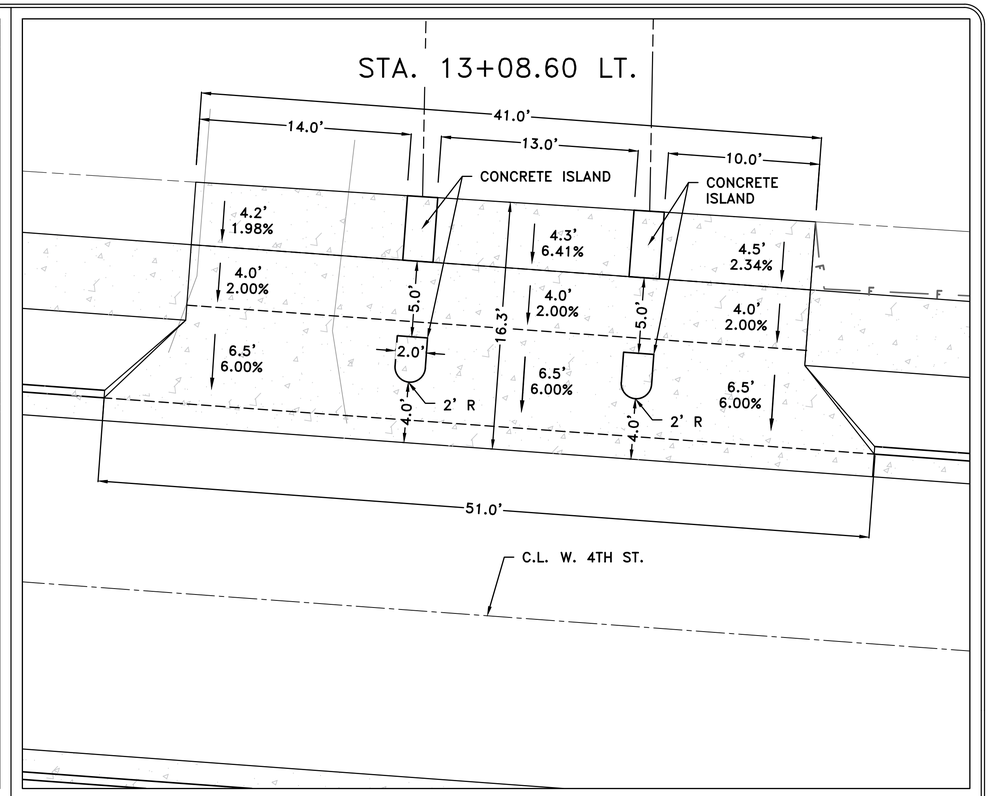

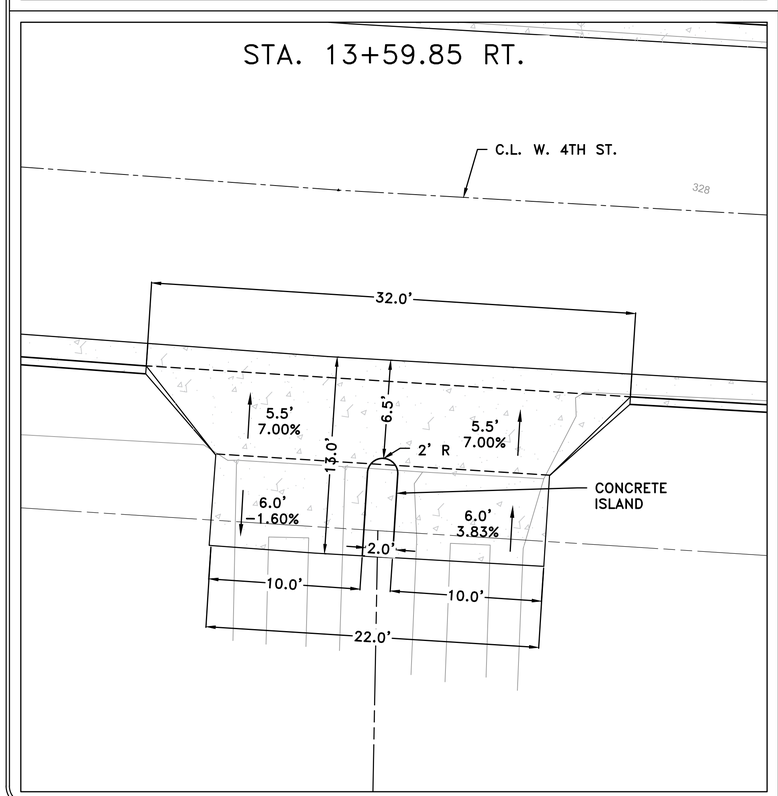

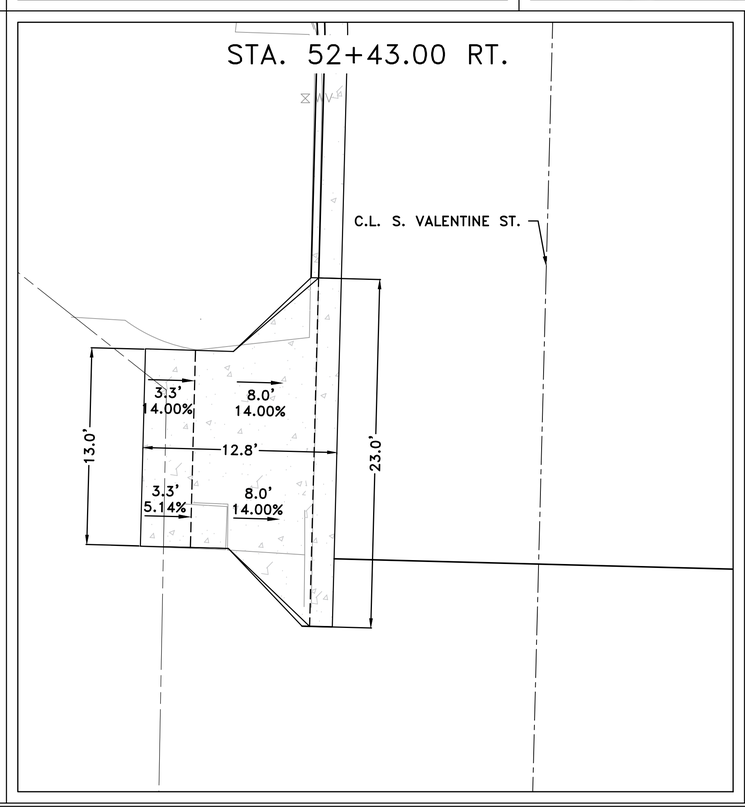

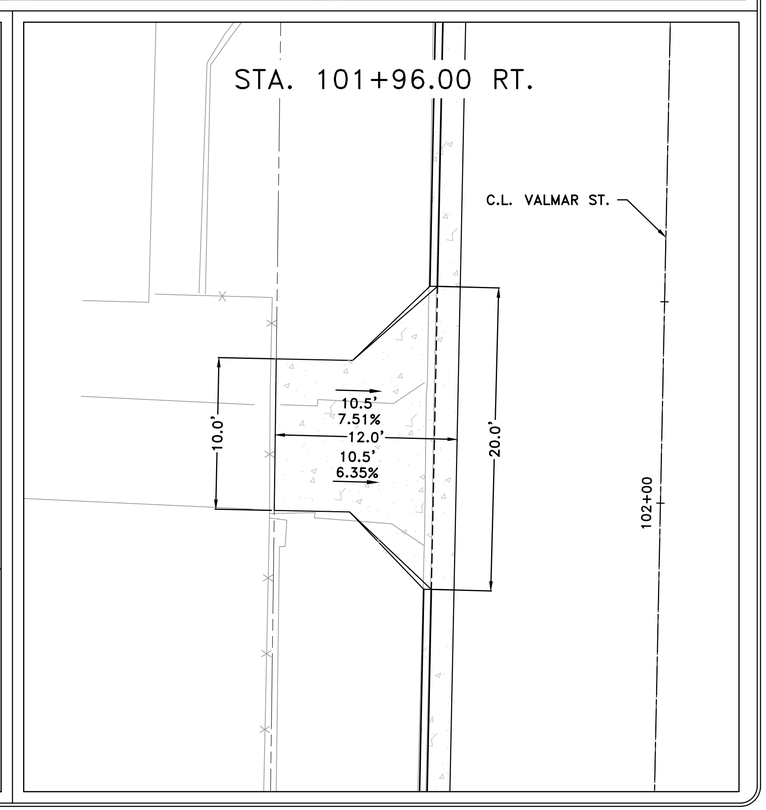

REVISIONS	DATE

CITY OF LITTLE ROCK, ARKANSAS
WEST 4TH STREET DRAINAGE
AND STREET IMPROVEMENTS

DRIVEWAY DETAILS

DEPARTMENT OF PUBLIC WORKS
CIVIL ENGINEERING
701 W. MARKHAM
LITTLE ROCK, ARKANSAS 72201

DRAWN BY	MJM
DESIGNED	MJM
CHECKED	RCC
DATE	12-10-2019
SCALE	N.T.S.
PROJECT NO.	03-17-DR-107
SHEET NO.	C28

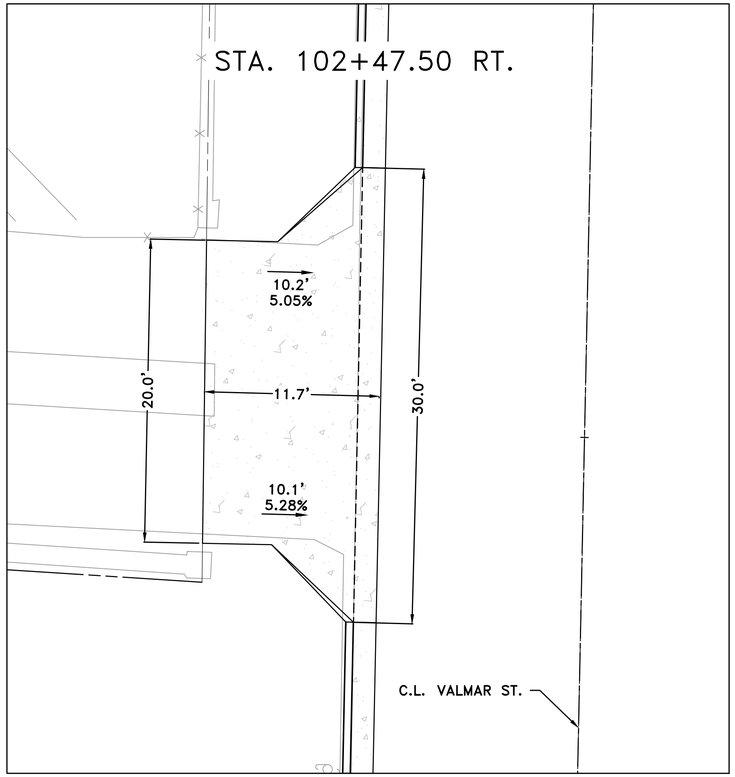

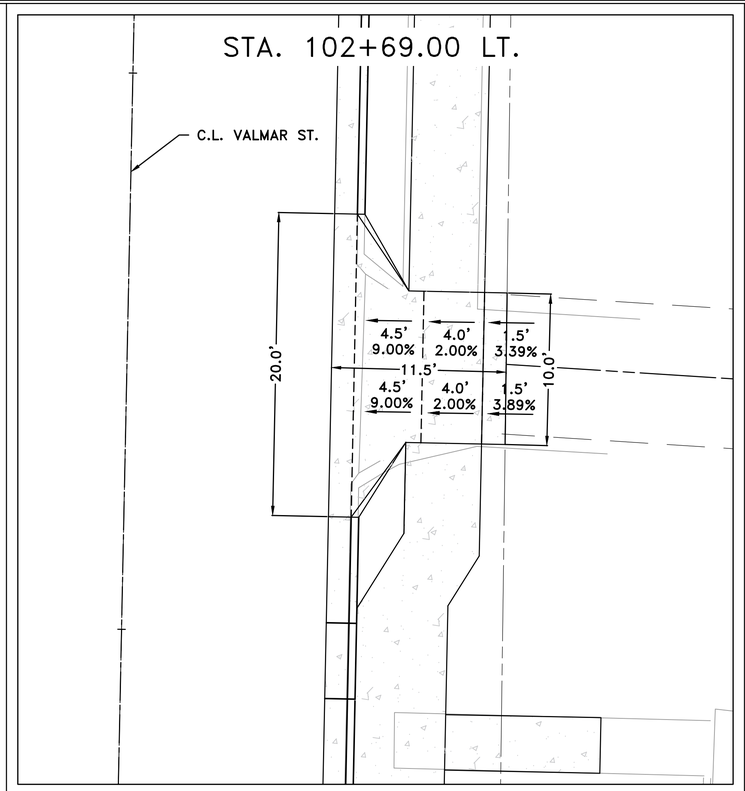

REVISIONS	DATE

CITY OF LITTLE ROCK, ARKANSAS
WEST 4TH STREET DRAINAGE
AND STREET IMPROVEMENTS

DRIVEWAY DETAILS

DEPARTMENT OF PUBLIC WORKS
CIVIL ENGINEERING
701 W. MARKHAM
LITTLE ROCK, ARKANSAS 72201

DRAWN BY	MJM
DESIGNED	MJM
CHECKED	RCC
DATE	12-10-2019
SCALE	N.T.S.
PROJECT NO.	03-17-DR-107
SHEET NO.	C29

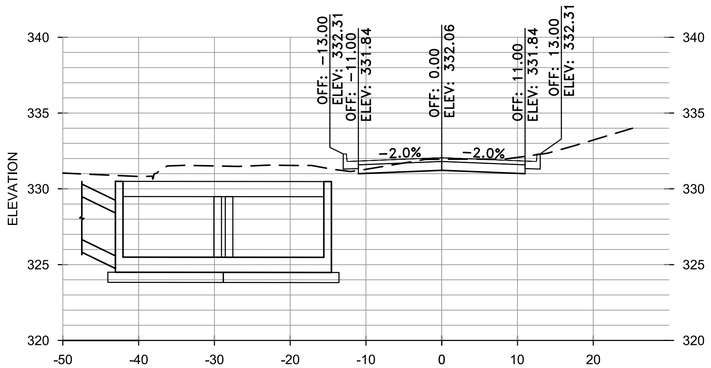

11+00

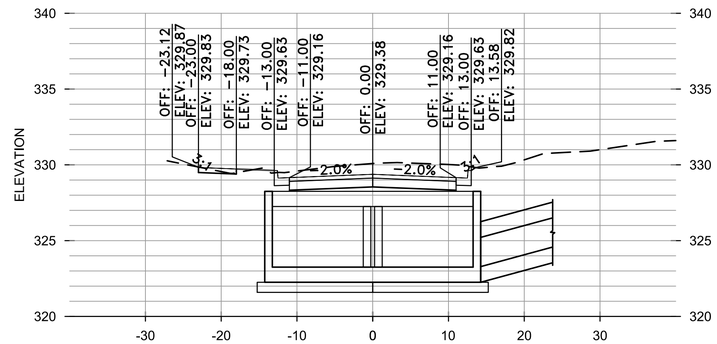

12+18.85

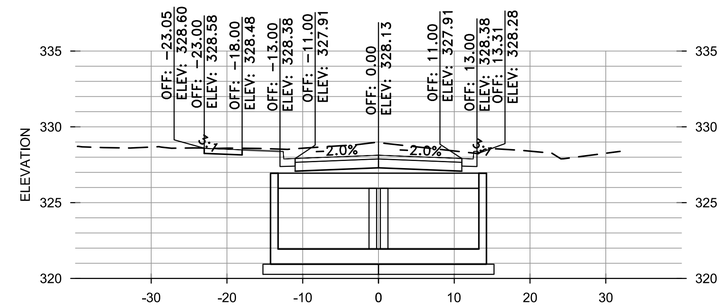

13+00

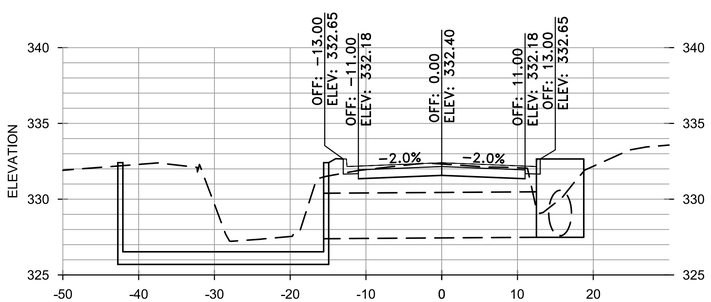

10+69

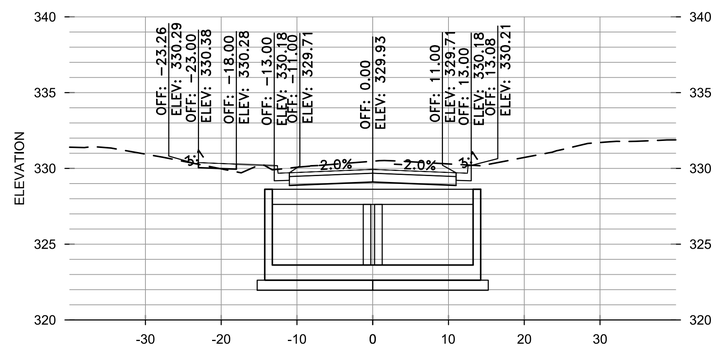

12+00

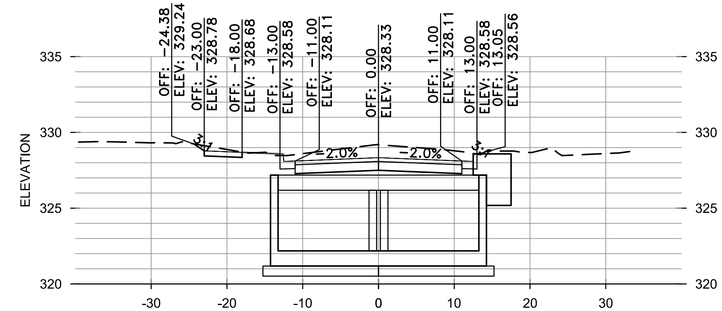

12+80

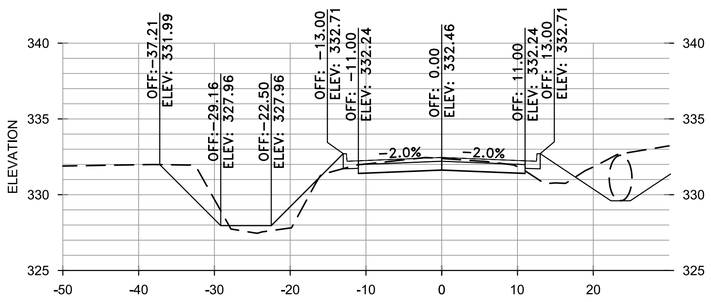

10+50

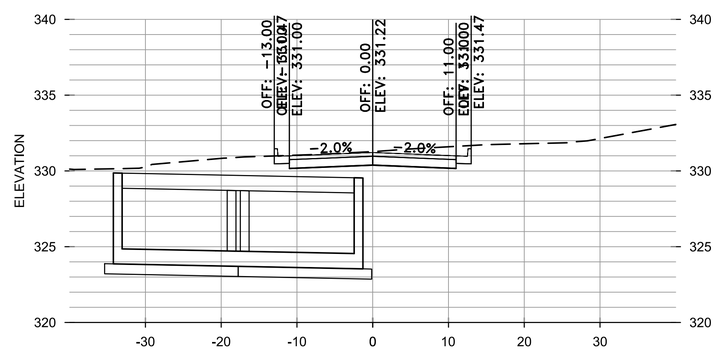

11+50

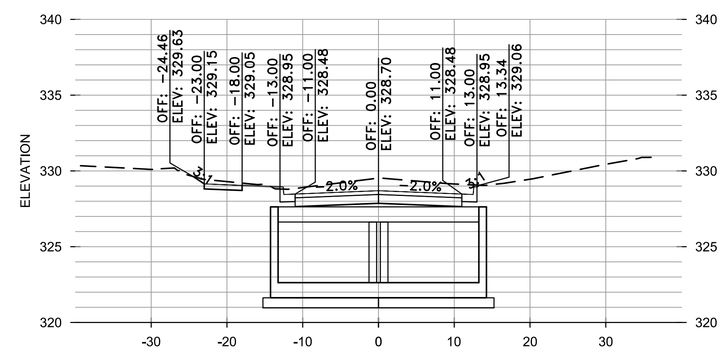

12+50

REVISIONS	DATE

CITY OF LITTLE ROCK, ARKANSAS
WEST 4TH STREET DRAINAGE AND STREET IMPROVEMENTS

CROSS SECTIONS
4TH STREET

DEPARTMENT OF PUBLIC WORKS
CIVIL ENGINEERING
701 W. MARKHAM
LITTLE ROCK, ARKANSAS 72201

DRAWN BY	MJM
DESIGNED	RCC
CHECKED	RCC
DATE	12-10-2019
SCALE	H: 1"=10' V: 1"=5'
PROJECT NO.	03-17-DR-107
SHEET NO.	C30

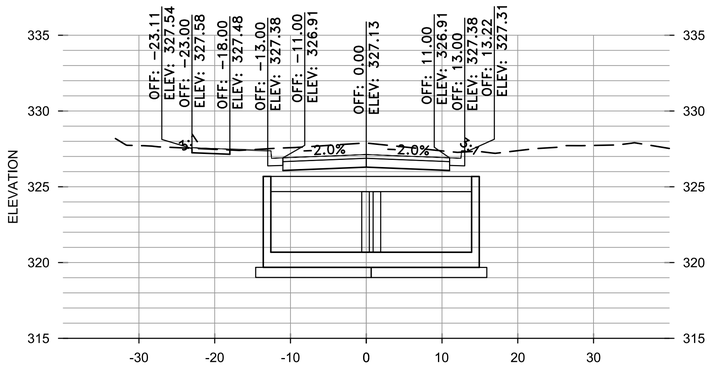

14+00

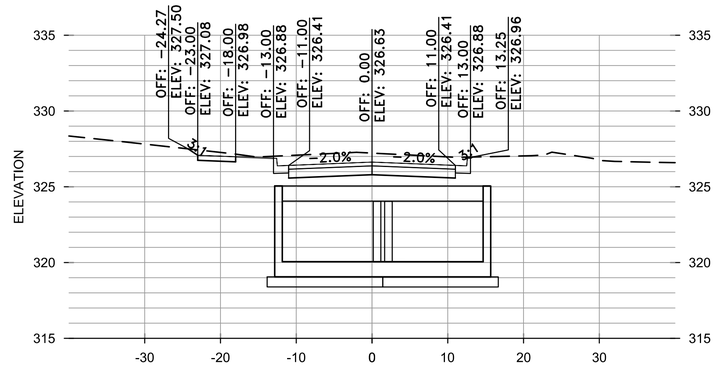

14+50

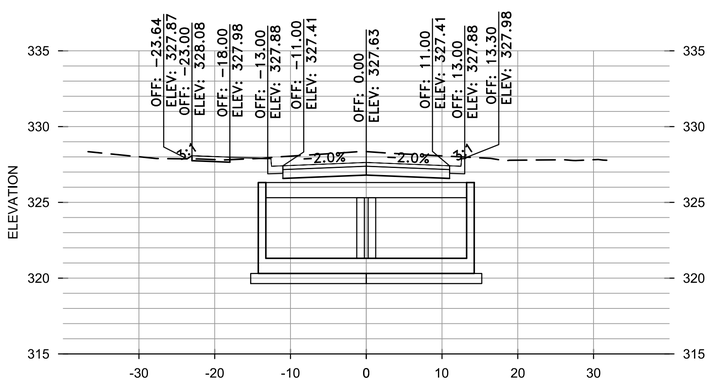

13+50

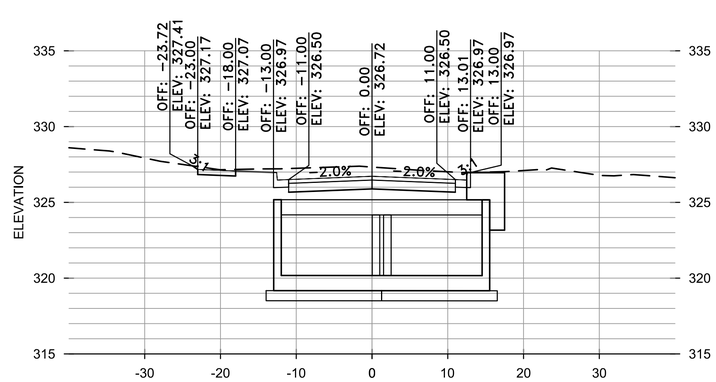

14+41

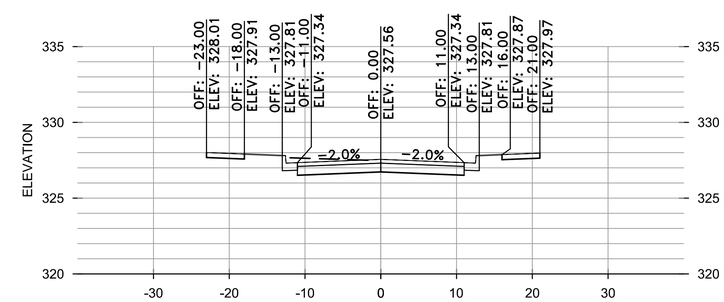

15+50

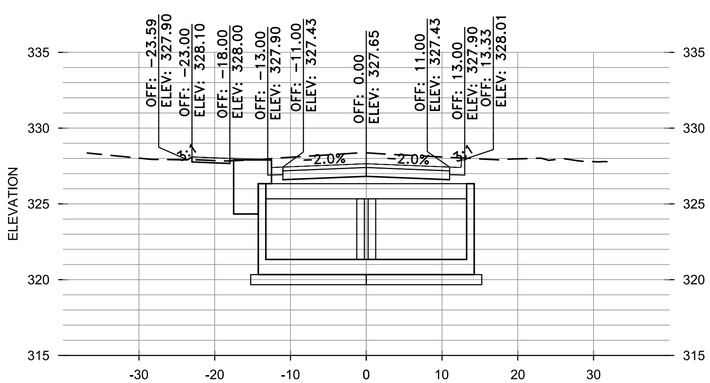

13+48

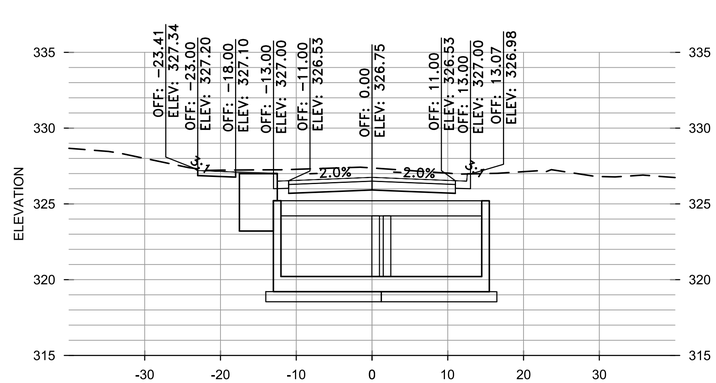

14+38

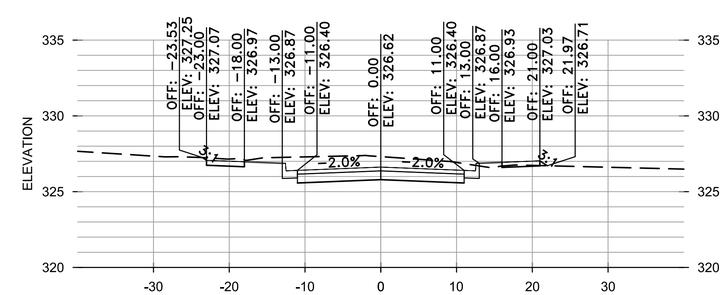

15+00

REVISIONS	DATE

CITY OF LITTLE ROCK, ARKANSAS
WEST 4TH STREET DRAINAGE
AND STREET IMPROVEMENTS

CROSS SECTIONS
4TH STREET

DEPARTMENT OF PUBLIC WORKS
CIVIL ENGINEERING
701 W. MARKHAM
LITTLE ROCK, ARKANSAS 72201

DRAWN BY	MJM
DESIGNED	RCC
CHECKED	RCC
DATE	12-10-2019
SCALE	H: 1"=10' V: 1"=5'
PROJECT NO.	03-17-DR-107
SHEET NO.	C31

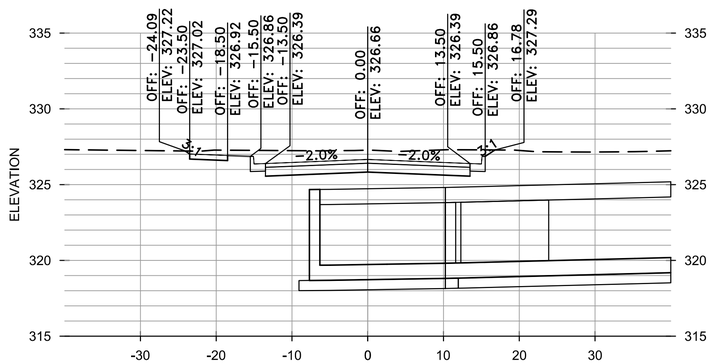

101+00

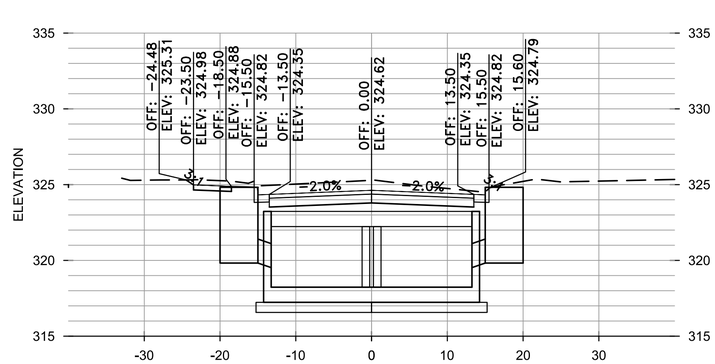

102+25

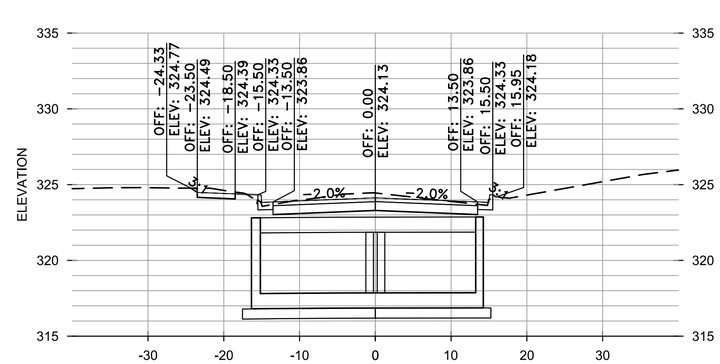

103+00

100+63

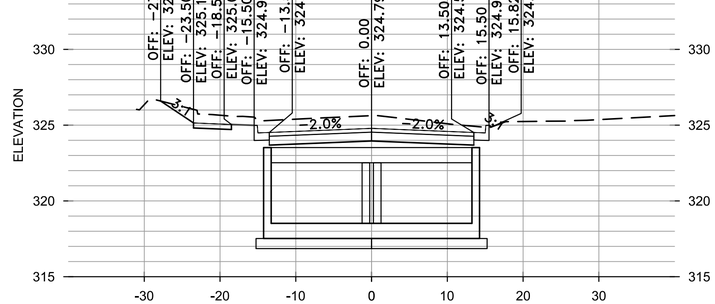

102+00

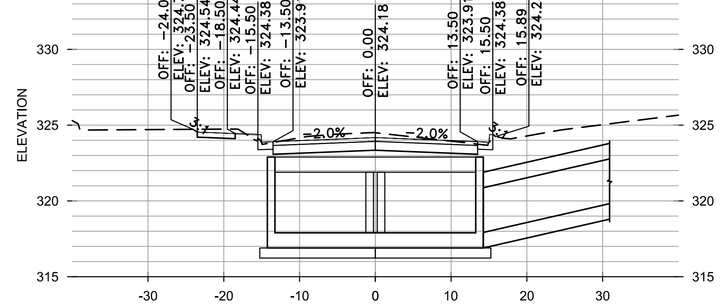

102+92.09

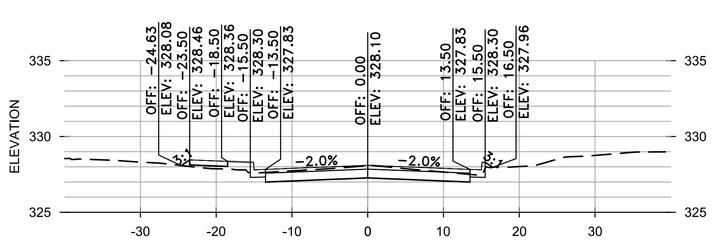

100+50

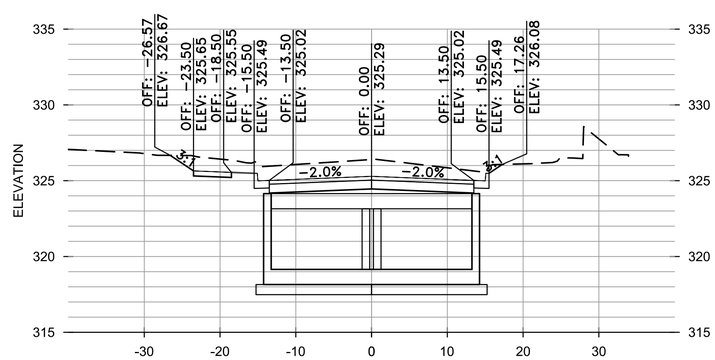

101+50

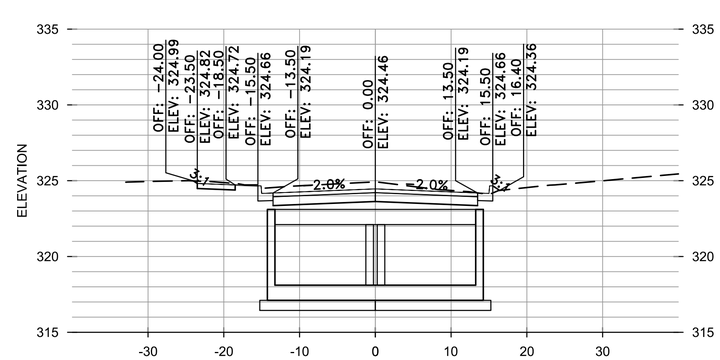

102+50

REVISIONS	DATE

CITY OF LITTLE ROCK, ARKANSAS
WEST 4TH STREET DRAINAGE AND STREET IMPROVEMENTS

CROSS SECTIONS
VALMAR STREET

DEPARTMENT OF PUBLIC WORKS
CIVIL ENGINEERING
701 W. MARKHAM
LITTLE ROCK, ARKANSAS 72201

DRAWN BY	MJM
DESIGNED	RCC
CHECKED	RCC
DATE	12-10-2019
SCALE	H: 1"=10' V: 1"=5'
PROJECT NO.	03-17-DR-107
SHEET NO.	C32

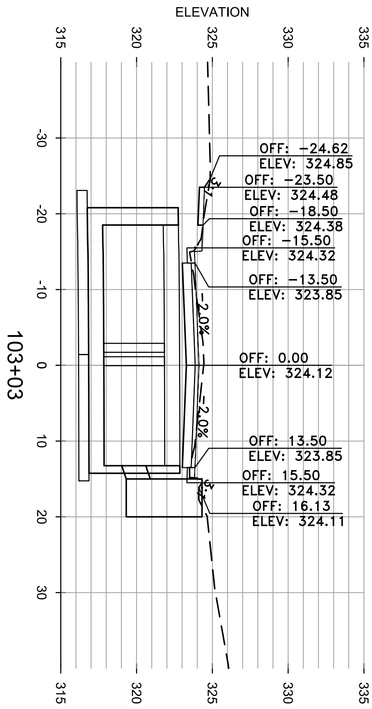

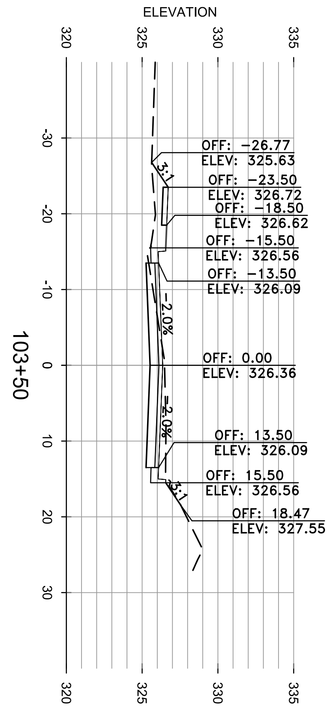

DRAWN BY	MJM
DESIGNED	RCC
CHECKED	RCC
DATE	12-10-2019
SCALE	H: 1"=10' V: 1"=5'
PROJECT NO.	03-17-DR-107
SHEET NO.	C33

DEPARTMENT OF PUBLIC WORKS
CIVIL ENGINEERING
701 W. MARKHAM
LITTLE ROCK, ARKANSAS 72201

CITY OF LITTLE ROCK, ARKANSAS
WEST 4TH STREET DRAINAGE
AND STREET IMPROVEMENTS

CROSS SECTIONS
VALMAR STREET

REVISIONS	DATE

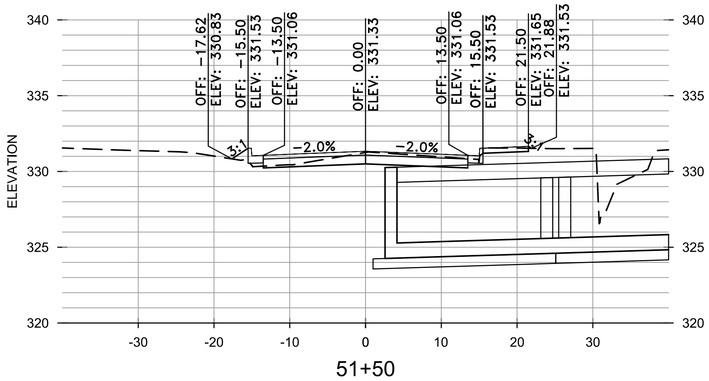

51+50

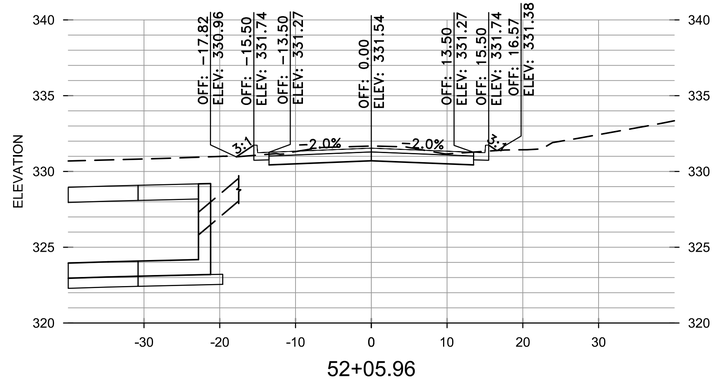

52+05.96

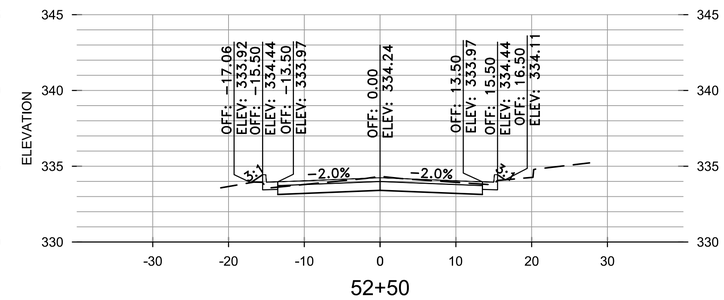

52+50

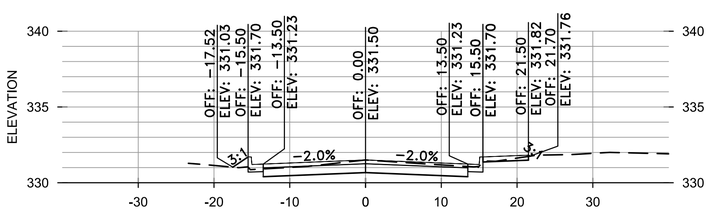

51+20

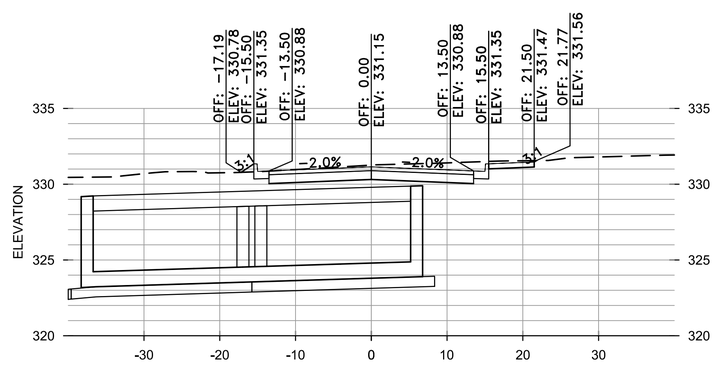

51+83.36

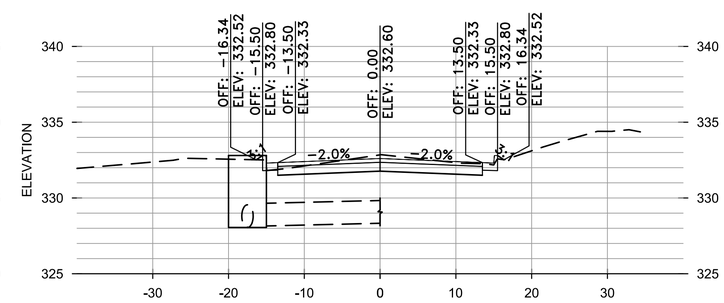

52+32

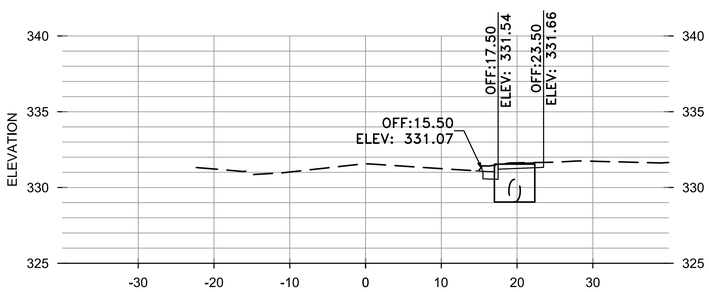

51+15

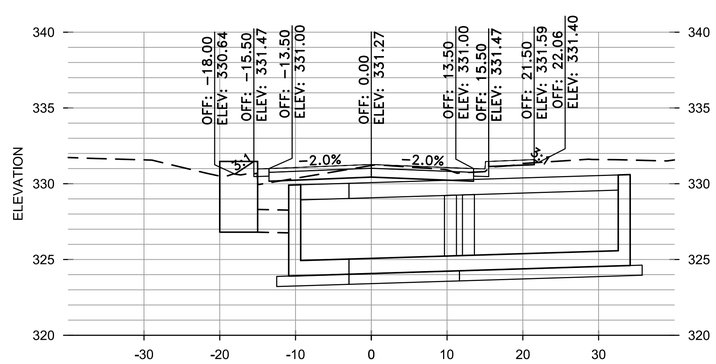

51+61

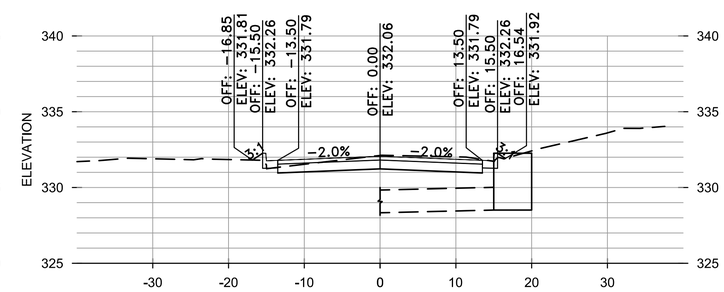

52+23

REVISIONS	DATE

CITY OF LITTLE ROCK, ARKANSAS
WEST 4TH STREET DRAINAGE AND STREET IMPROVEMENTS

CROSS SECTIONS
VALENTINE STREET

DEPARTMENT OF PUBLIC WORKS
CIVIL ENGINEERING
701 W. MARKHAM
LITTLE ROCK, ARKANSAS 72201

DRAWN BY	MJM
DESIGNED	RCC
CHECKED	RCC
DATE	12-10-2019
SCALE	H: 1"=10' V: 1"=5'
PROJECT NO.	03-17-DR-107
SHEET NO.	C34