CLR PROJECT #1-17-ST-56B
13TH STREET BRIDGE REPAIR
OVER UNION PACIFIC RAILROAD

LITTLE ROCK, AR

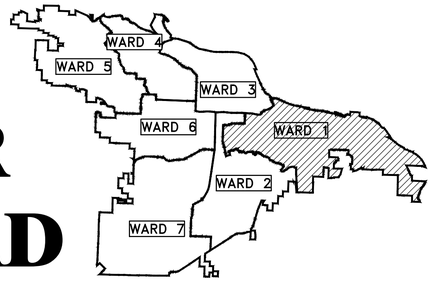

PROJECT LOCATION – WARD 1

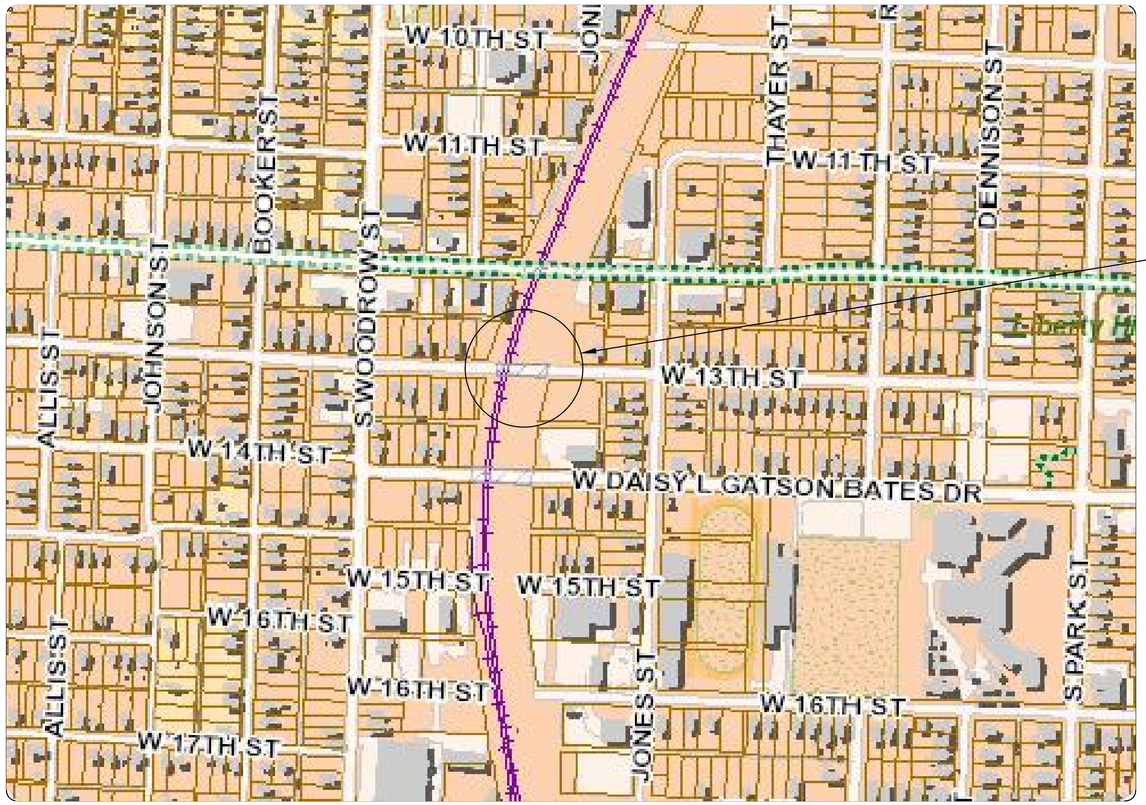

PROJECT LOCATION

SHEET NO.	TITLE
S1	COVER SHEET
S2	QUANTITIES & GENERAL NOTES
S3	BRIDGE LAYOUT
S4	BORING LOGS
S5	BORING LOGS
S6	TYPICAL SECTIONS
S7	REINFORCED CONCRETE SLAB DETAILS
S8	REINFORCED CONCRETE SLAB DETAILS
S9	REINFORCED CONCRETE SLAB DETAILS
S10	EXPANSION JOINT DETAILS
S11	APPROACH GUTTER DETAILS
S12	END BENT 1 DETAILS
S13	MISCELLANEOUS DETAILS
S14	MAINTENANCE OF TRAFFIC

PUBLIC WORKS · CITY OF LITTLE ROCK ·

2019-2021
BOND PROGRAM

DEPARTMENT OF PUBLIC WORKS
CIVIL ENGINEERING
701 WEST MARKHAM STREET
LITTLE ROCK, ARKANSAS 72201

811 Know what's **below.** **Call** before you dig.

Michael Baker INTERNATIONAL
1400 W. MARKHAM ST., SUITE 204
LITTLE ROCK, AR 72201
501-907-6223

REVISIONS	DATE

CITY OF LITTLE ROCK, ARKANSAS
13TH. ST. BRIDGE REPAIR
COVER SHEET

DEPARTMENT OF PUBLIC WORKS
CIVIL ENGINEERING
701 W. MARKHAM
LITTLE ROCK, ARKANSAS 72201

90% COMPLETE

DRAWN BY	SCR
DESIGNED	SCR
CHECKED	SFH
DATE	09/2019
SCALE	N.T.S.
PROJECT NO.	CLR #1-17-ST-56B
SHEET NO.	S1

	CLR PROJECT #1-17-ST-56B		
	13th ST. BRIDGE REPAIR		
	SEPTEMBER 2019		
ITEM #	**ITEM DESCRIPTION**	**UNIT**	**QUANTITY**
5.01	TACK COAT	GAL.	30
6.01	ACHM SURFACE COURSE	TON	35
9.04	CONCRETE SIDEWALK (4" THICK)	S.F.	390
27.10	COLD MILLING ASPHALT PAVEMENT	S.Y.	420
202	R & D OF CONCRETE WALKS	EACH	2
601	MOBILIZATION	L.S.	1
603	MAINTENANCE OF TRAFFIC	L.S.	1
719.04W	THERMOPLASTIC PAVEMENT MARKING WHITE (4")	L.F.	604
719.04Y	THERMOPLASTIC PAVEMENT MARKING YELLOW (4")	L.F.	604
801	UNCLASSIFIED EXCAVATION FOR STRUCTURES-BRIDGE	C.Y.	390
802	CLASS S(AE) CONCRETE - BRIDGE	C.Y.	106
803	CLASS 1 PROTECTIVE SURFACE TREATMENT	GAL.	4
804	EPOXY COATED REINFORCING STEEL (GRADE 60)	LB.	16,500
807	STRUCTURAL STEEL IN BEAM SPANS (M270, GRADE 50)	LB.	770
809	SILICONE JOINT SEALANT	L.F.	44
821	MODIFICATION OF EXISTING BRIDGE STRUCTURE	L.S.	1

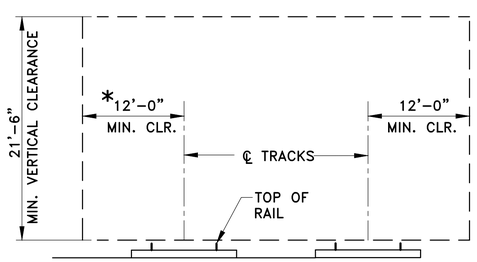

RAILROAD CLEARANCE DIAGRAM
(DIMENSIONS ARE PERPENDICULAR TO TRACK)

*HORIZONTAL CLEARANCE TO THE WEST MAY BE CONTROLLED BY AVAILABLE DISTANCE TO BENT 1 FOOTING. CONTRACTOR SHALL FIELD VERIFY EXISTING HORIZONTAL CLEARANCE TO EXISTING BENT 1 FOOTING.

GENERAL NOTES

CONSTRUCTION SPECIFICATIONS:
CITY OF LITTLE ROCK CONTRACT CONDITIONS AND SPECIFICATIONS (NOVEMBER 2015)

ARKANSAS STATE HIGHWAY AND TRANSPORTATION DEPARTMENT STANDARD SPECIFICATIONS FOR HIGHWAY CONSTRUCTION (2014 EDITION) WITH APPLICABLE SUPPLEMENTAL SPECIFICATIONS AND SPECIAL PROVISIONS. UNLESS NOTED OTHERWISE IN THE PLANS, SECTION AND SUBSECTION NUMBERS REFER TO THE CONSTRUCTION SPECIFICATIONS.

DESIGN SPECIFICATIONS: (FOR NEW WORK)
STANDARD SPECIFICATIONS FOR HIGHWAY BRIDGES (17TH EDITION – 2002)
LIVE LOADING: HS20

MATERIALS AND STRENGTHS:

CLASS S(AE) CONCRETE	f'c = 4,000 PSI
REINFORCING STEEL (AASHTO M31 OR M322, TYPE A, GR. 60)	fy = 60,000 PSI
STRUCTURAL STEEL (AASHTO M270, GR. 50)	Fy = 50,000 PSI

SHOP DRAWINGS & REQUEST FOR SUBSTITUTIONS:
ALL SHOP DRAWINGS, MILL TEST REPORTS, AND REQUEST FOR SUBSTITUTIONS SHALL BE SENT TO THE SEALING ENGINEER FOR APPROVAL PRIOR TO FABRICATION.

CONCRETE:
CONCRETE SHALL BE POURED IN THE DRY AND ALL EXPOSED CORNERS TO BE CHAMFERED ¾" UNLESS OTHERWISE NOTED. ALL CONCRETE SHALL BE CLASS S(AE) WITH A MINIMUM 28 DAY COMPRESSIVE STRENGTH f'c = 4,000 PSI.

THE CONCRETE BETWEEN CURBS SHALL BE GIVEN A TINED FINISH IN ACCORDANCE WITH SUBSECTION 802.19 FOR CLASS 5 TINED BRIDGE ROADWAY SURFACE FINISH. SIDEWALKS AND CURBS SHALL BE GIVEN A CLASS 6 BROOMED FINISH.

REINFORCING STEEL:
ALL REINFORCING STEEL SHALL CONFORM TO AASHTO M31 OR M322, TYPE A GR. 60 AND SHALL BE EPOXY COATED. MILL TEST REPORTS SHALL BE SUBMITTED FOR REINFORCING STEEL. THE REINFORCING STEEL IS TO BE ACCURATELY LOCATED IN THE FORMS AND FIRMLY HELD IN PLACE BY STEEL WIRE SUPPORTS, SUFFICIENT IN NUMBER AND SIZE TO PREVENT DISPLACEMENT DURING THE COURSE OF CONSTRUCTION. THE WIRE SUPPORTS WILL NOT BE PAID FOR DIRECTLY, BUT WILL BE CONSIDERED SUBSIDIARY TO THE ITEM "EPOXY COATED REINFORCING STEEL (GRADE 60)." ANY DAMAGE TO EPOXY COATING DURING FABRICATION, SHIPPING, INSTALLATION, FIELD CUTTING OR BENDING SHALL BE REPAIRED IN ACCORDANCE WITH SUBSECTION 804.05.

STRUCTURAL STEEL:
ALL STRUCTURAL STEEL SHALL BE AASHTO M270, GRADE 50 AND SHALL BE PAID FOR AS "STRUCTURAL STEEL IN BEAM SPANS (M270, GR. 50)" UNLESS OTHERWISE NOTED.

DRAWINGS SHOW GENERAL FEATURES OF DESIGN ONLY. SHOP DRAWINGS SHALL BE MADE IN ACCORDANCE WITH THE SPECIFICATIONS, SUBMITTED AND APPROVAL SECURED BEFORE FABRICATION IS BEGUN.

REQUESTS FOR SUBSTITUTION OF STRUCTURAL STEEL WITH SHAPES OF GREATER SIZE MUST BE SUBMITTED BY THE CONTRACTOR TO THE ENGINEER FOR APPROVAL. STEEL OF EQUAL OR GREATER STRENGTHS WILL BE ACCEPTED ONLY WHEN SHOWN ON THE APPROVED SHOP DRAWINGS. PAYMENT WILL BE BASED ON THE SHAPES SHOWN IN THE PLANS, AND NO ADDITIONAL COMPENSATION WILL BE MADE FOR ANY ADJUSTMENTS DUE TO SUBSTITUTIONS.

ALL WELDING THAT IS TO BE DONE DURING FABRICATION OF STRUCTURAL STEEL, INCLUDING TEMPORARY WELDS, SHALL BE DETAILED ON THE SHOP DRAWINGS AND SUBMITTED FOR APPROVAL. IF ADDITIONAL WELDS ARE REQUIRED, WHETHER PERMANENT OR TEMPORARY, A FORMAL REQUEST WITH DETAILED DRAWINGS SHALL BE SUBMITTED TO THE ENGINEER FOR APPROVAL.

THERE ARE NO EXISTING BRIDGE PLANS AVAILABLE. ALL DIMENSIONS AND DATA USED FOR NEW DETAILS SHALL BE FIELD VERIFIED BY CONTRACTOR PRIOR TO FABRICATION TO ENSURE COMPATIBILITY OF NEW WORK WITH THE EXISTING STRUCTURE.

SILICONE JOINT SEALANT:
THE NEW SILICONE JOINT SEALANT SHALL BE FURNISHED AND INSTALLED IN ACCORDANCE WITH SUBSECTIONS 809.02(c) AND 809.03(c).

MODIFICATION OF EXISTING BRIDGE STRUCTURES:
THE COST OF ALL LABOR, MATERIALS, AND INCIDENTALS TO MODIFY EXISTING EXPANSION JOINTS AT ABUTMENT NO. 1 SHALL BE INCLUDED IN ITEM "MODIFICATION OF EXISTING BRIDGE STRUCTURES (BRIDGE NO.1)". THIS INCLUDES SAW CUTTING, REMOVING PORTION OF EXISTING CONCRETE AT ABUTMENT BACKWALLS AND END OF SPAN NO. 1 FOR JOINTS AT BRIDGE END, AND CLEANING EXISTING REINFORCING TO REMAIN. ALL WORK SHALL BE IN ACCORDANCE WITH SECTION 821.

EXISTING UTILITIES:
THERE IS A POSSIBILITY THAT UNDERGROUND UTILITIES EXIST WITHIN AND ADJACENT TO THE LIMITS OF CONSTRUCTION. AN ATTEMPT HAS BEEN MADE TO LOCATE THESE UTILITIES ON THE PLANS. ALL EXISTING UTILITIES MAY NOT BE SHOWN ON THE PLANS, AND THE LOCATION OF THE UTILITIES MAY VARY FROM THE APPROXIMATE LOCATION SHOWN ON THE PLANS. PRIOR TO BEGINNING ANY TYPE OF EXCAVATION, THE CONTRACTOR SHALL CONTACT THE UTILITIES INVOLVED AND MAKE ARRANGEMENTS FOR THE LOCATION OF THE UTILITY ON THE GROUND. THE CONTRACTOR SHALL MAINTAIN THE UTILITY LOCATION MARKINGS UNTIL THEY ARE NO LONGER NECESSARY.

ARKANSAS STATE LAW, THE UNDERGROUND FACILITIES DAMAGE PREVENTION ACT, REQUIRES TWO WORKING DAYS ADVANCE NOTIFICATION THROUGH THE ARKANSAS ONE-CALL SYSTEM CENTER BEFORE EXCAVATING USING MECHANIZED EQUIPMENT OR EXPLOSIVES (EXCEPT IN THE CASE OF AN EMERGENCY). THE ONE-CALL SYSTEM PHONE NUMBER IS 1-800-482-8998. THE CONTRACTOR IS ADVISED THAT THERE IS A SEVERE PENALTY FOR NOT MAKING THIS CALL. NOT ALL UTILITY COMPANIES ARE MEMBERS OF THE ARKANSAS ONE-CALL SYSTEM; THEREFORE, THE CONTRACTOR IS ADVISED TO CONTACT ALL NON-MEMBER UTILITIES AS WELL AS THE SYSTEM.

UNION PACIFIC RAILROAD CONTACT

DOUGLAS WOODS, MANAGER OF INDUSTRY & PUBLIC PROJECTS
PHONE: (281) 350-7609 (OFFICE)
(832) 493-4556 (CELL)
DGWOODS@UP.COM
24125 OLD ALDINE WESTFIELD RD.
SPRING, TX 77373

RAILROAD NOTES:
THE CONTRACTOR SHALL NOT OCCUPY ANY PORTION OF THE RAILROAD CLEARANCE ENVELOPE.

ALL BRIDGE REPAIR OPERATIONS SHALL BE COORDINATED WITH THE CITY OF LITTLE ROCK AND UNION PACIFIC RAILROAD AND APPROVAL SECURED PRIOR TO BEGINNING WORK.

THE CONTRACTOR SHALL USE RAILROAD FLAGMEN DURING ALL BRIDGE REPAIR OPERATIONS, AS WELL AS ANYTIME THE CONTRACTOR IS WORKING ON OR ABOVE THE RAILROAD RIGHT-OF-WAY.

REVISIONS	DATE

CITY OF LITTLE ROCK, ARKANSAS
13TH ST. BRIDGE REPAIR
QUANTITIES AND GENERAL NOTES

DEPARTMENT OF PUBLIC WORKS
CIVIL ENGINEERING
701 W. MARKHAM
LITTLE ROCK, ARKANSAS 72201

90% COMPLETE

DRAWN BY	SCR
DESIGNED	SCR
CHECKED	SFH
DATE	09/2019
SCALE	NONE
PROJECT NO.	CLR #1-17-ST-56B
SHEET NO.	S2

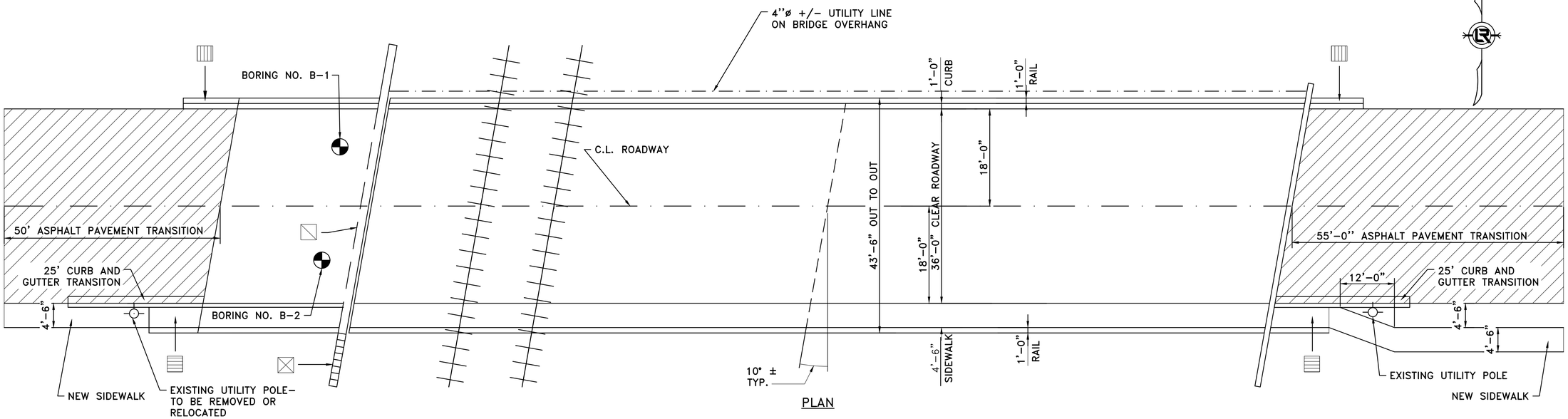

PLAN

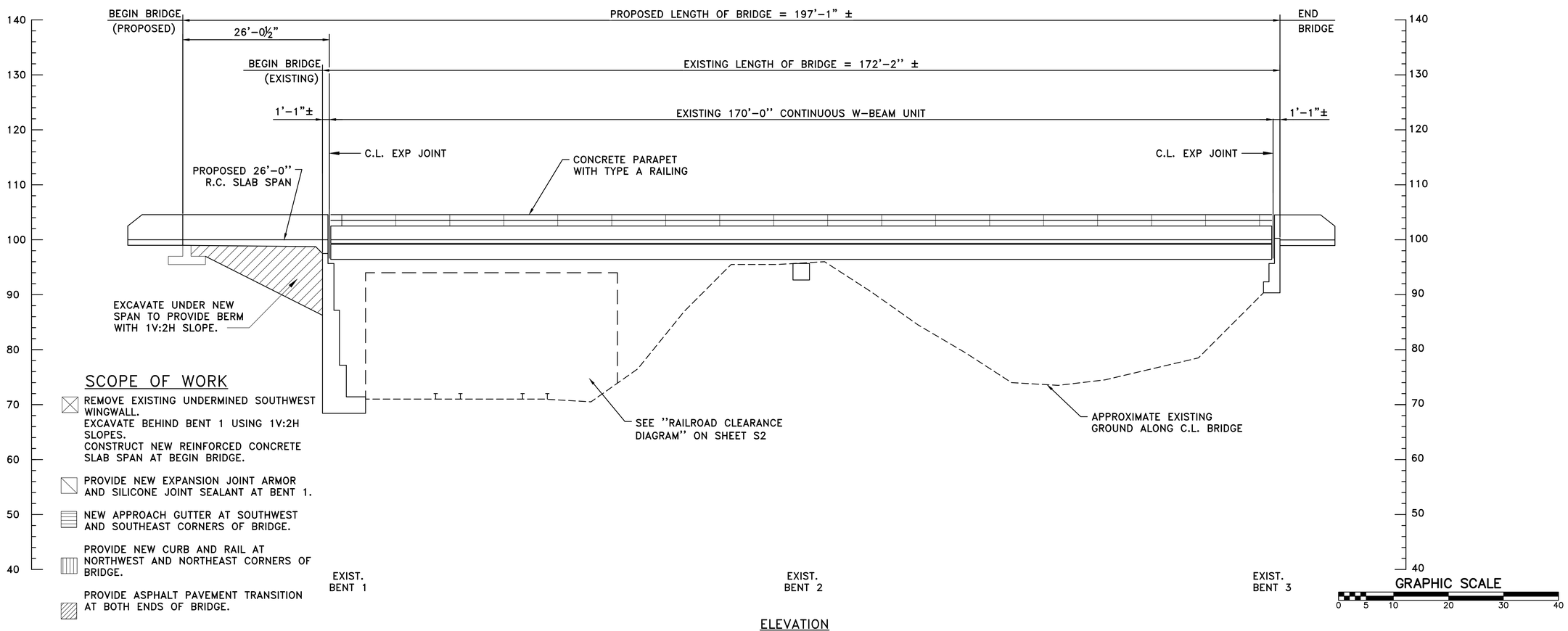

SCOPE OF WORK

- REMOVE EXISTING UNDERMINED SOUTHWEST WINGWALL. EXCAVATE BEHIND BENT 1 USING 1V:2H SLOPES. CONSTRUCT NEW REINFORCED CONCRETE SLAB SPAN AT BEGIN BRIDGE.
- PROVIDE NEW EXPANSION JOINT ARMOR AND SILICONE JOINT SEALANT AT BENT 1.
- NEW APPROACH GUTTER AT SOUTHWEST AND SOUTHEAST CORNERS OF BRIDGE.
- PROVIDE NEW CURB AND RAIL AT NORTHWEST AND NORTHEAST CORNERS OF BRIDGE.
- PROVIDE ASPHALT PAVEMENT TRANSITION AT BOTH ENDS OF BRIDGE.

ELEVATION

REVISIONS	DATE

CITY OF LITTLE ROCK, ARKANSAS
13TH ST. BRIDGE REPAIR

BRIDGE LAYOUT

DEPARTMENT OF PUBLIC WORKS
CIVIL ENGINEERING
701 W. MARKHAM
LITTLE ROCK, ARKANSAS 72201

90% COMPLETE

DRAWN BY	KDH
DESIGNED	SCR
CHECKED	SFH
DATE	09/2019
SCALE	N.T.S.
PROJECT NO.	CLR #1-17-ST-56B
SHEET NO.	S3

BORING LOG NO. B-1

PROJECT: 13th Street Railroad Bridge

CLIENT: Michael Baker International, LLC
Little Rock, Arkansas

SITE: 13th Street
Little Rock, Arkansas

LOCATION See Exploration Plan
Latitude: 34.7389° Longitude: -92.3044°

GRAPHIC LOG / DEPTH	DEPTH (Ft.)	WATER LEVEL OBSERVATIONS	SAMPLE TYPE	FIELD TEST RESULTS	WATER CONTENT (%)	DRY UNIT WEIGHT (pcf)	ATTERBERG LIMITS LL-PL-PI	PERCENT FINES
FILL - CLAYEY SAND (SC), brown and reddish-brown								
				5-3-3 N=6	9			
				3-2-4 N=6	12		38-15-23	44
				3-3-4 N=7	14			
	5			3-3-4 N=7	16			
8.5 **SILTY CLAY WITH SAND (CL-ML)**, gray, medium stiff				4-2-4 N=6	21		23-18-5	75
	10							
13.5 **CLAYEY SHALE**, reddish-brown and gray, soft rock				5-9-11 N=20				
	15							
18.5 **HIGHLY WEATHERED SHALE**, gray and reddish-brown, soft rock				10-12-16 N=28				
	20							
				15-23-33 N=56				
	25							

Stratification lines are approximate. In-situ, the transition may be gradual.

Hammer Type: Automatic

Advancement Method:
0 to 30 feet: Solid-stem auger

Abandonment Method:
Boring backfilled with Auger Cuttings
Surface capped with concrete

See Exploration and Testing Procedures for a description of field and laboratory procedures used and additional data (If any).

See Supporting Information for explanation of symbols and abbreviations.

Notes:

WATER LEVEL OBSERVATIONS

No free water observed

Terracon
25809 I 30
Bryant, AR

Boring Started: 03-06-2019
Boring Completed: 03-06-2019
Drill Rig: CME 679
Driller: JB
Project No.: 35185101

THIS BORING LOG IS NOT VALID IF SEPARATED FROM ORIGINAL REPORT. GEO SMART LOG-NO WELL 35185101 13TH STREET RR BR.GPJ MODELLAYER.GPJ 3/18/19

BORING LOG NO. B-1

PROJECT: 13th Street Railroad Bridge

CLIENT: Michael Baker International, LLC
Little Rock, Arkansas

SITE: 13th Street
Little Rock, Arkansas

LOCATION See Exploration Plan
Latitude: 34.7389° Longitude: -92.3044°

GRAPHIC LOG / DEPTH	DEPTH (Ft.)	WATER LEVEL OBSERVATIONS	SAMPLE TYPE	FIELD TEST RESULTS	WATER CONTENT (%)	DRY UNIT WEIGHT (pcf)	ATTERBERG LIMITS LL-PL-PI	PERCENT FINES
HIGHLY WEATHERED SHALE, gray and reddish-brown, soft rock *(continued)*								
				15-15-16 N=31				
30.0 ***Boring Terminated at 30 Feet***	30							

Stratification lines are approximate. In-situ, the transition may be gradual.

Hammer Type: Automatic

Advancement Method:
0 to 30 feet: Solid-stem auger

Abandonment Method:
Boring backfilled with Auger Cuttings
Surface capped with concrete

See Exploration and Testing Procedures for a description of field and laboratory procedures used and additional data (If any).

See Supporting Information for explanation of symbols and abbreviations.

Notes:

WATER LEVEL OBSERVATIONS

No free water observed

Terracon
25809 I 30
Bryant, AR

Boring Started: 03-06-2019
Boring Completed: 03-06-2019
Drill Rig: CME 679
Driller: JB
Project No.: 35185101

THIS BORING LOG IS NOT VALID IF SEPARATED FROM ORIGINAL REPORT. GEO SMART LOG-NO WELL 35185101 13TH STREET RR BR.GPJ MODELLAYER.GPJ 3/18/19

REVISIONS	DATE

CITY OF LITTLE ROCK, ARKANSAS
13TH ST. BRIDGE REPAIR

BORING LOGS

DEPARTMENT OF PUBLIC WORKS
CIVIL ENGINEERING
701 W. MARKHAM
LITTLE ROCK, ARKANSAS 72201

90% COMPLETE

DRAWN BY	KDH
DESIGNED	-
CHECKED	SFH
DATE	09/2019
SCALE	N.T.S
PROJECT NO.	CLR #1-17-ST-56B
SHEET NO.	S4

BORING LOG NO. B-2

PROJECT: 13th Street Railroad Bridge

CLIENT: Michael Baker International, LLC
Little Rock, Arkansas

SITE: 13th Street
Little Rock, Arkansas

LOCATION See Exploration Plan

Latitude: 34.7389° Longitude: -92.304°

GRAPHIC LOG / DEPTH	DEPTH (Ft.)	WATER LEVEL OBSERVATIONS	SAMPLE TYPE	FIELD TEST RESULTS	WATER CONTENT (%)	DRY UNIT WEIGHT (pcf)	ATTERBERG LIMITS LL-PL-PI	PERCENT FINES
FILL - CLAYEY SAND (SC), reddish-brown, gray and brown								
				8-7-4 N=11	3			
				3-2-3 N=5	9			26
				3-3-4 N=7	16			
	5			3-3-5 N=8	16		40-13-27	47
	10			2-2-3 N=5	18			
13.5 **LEAN CLAY (CL)**, with rock fragments, brown and gray, hard				17-25-14 N=39	11			
15.0 ***Boring Terminated at 15 Feet***	15							

Stratification lines are approximate. In-situ, the transition may be gradual.

Hammer Type: Automatic

Advancement Method:
0 to 15 feet: Solid-stem auger

Abandonment Method:
Boring backfilled with Auger Cuttings
Surface capped with concrete

See Exploration and Testing Procedures for a description of field and laboratory procedures used and additional data (If any).

See Supporting Information for explanation of symbols and abbreviations.

Notes:

WATER LEVEL OBSERVATIONS

No free water observed

Terracon
25809 I 30
Bryant, AR

Boring Started: 03-06-2019	Boring Completed: 03-06-2019
Drill Rig: CME 679	Driller: JB
Project No.: 35185101	

THIS BORING LOG IS NOT VALID IF SEPARATED FROM ORIGINAL REPORT. .GEO SMART LOG-NO WELL 35185101 13TH STREET RR BR.GPJ MODELLAYER.GPJ 3/18/19

REVISIONS	DATE

CITY OF LITTLE ROCK, ARKANSAS
13TH ST. BRIDGE REPAIR

BORING LOGS

DEPARTMENT OF PUBLIC WORKS
CIVIL ENGINEERING
701 W. MARKHAM
LITTLE ROCK, ARKANSAS 72201

90% COMPLETE

DRAWN BY
KDH
DESIGNED
-
CHECKED
SFH
DATE
09/2019
SCALE
N.T.S.
PROJECT NO.
CLR #1-17-ST-56B
SHEET NO.
S5

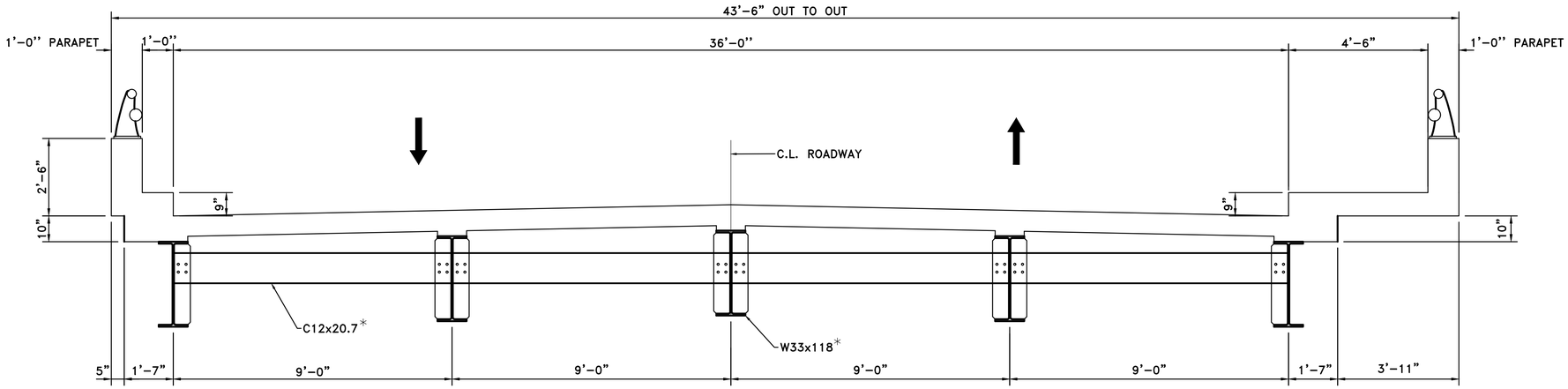

*BASED ON FIELD MEASUREMENTS.
NO ORIGINAL CONSTRUCTION
PLANS AVAILABLE.

EXISTING TYPICAL SECTION
(LOOKING FORWARD)

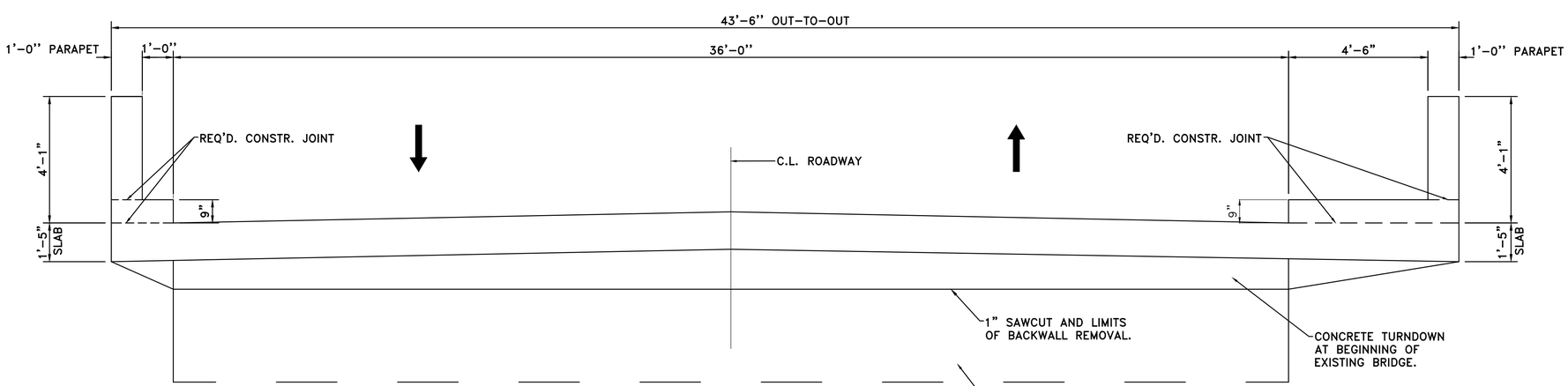

PROPOSED TYPICAL SECTION – R.C. SLAB
(LOOKING FORWARD)

REVISIONS	DATE

CITY OF LITTLE ROCK, ARKANSAS
13TH. ST. BRIDGE REPAIR

TYPICAL SECTIONS

DEPARTMENT OF PUBLIC WORKS
CIVIL ENGINEERING
701 W. MARKHAM
LITTLE ROCK, ARKANSAS 72201

90% COMPLETE

DRAWN BY	KDH
DESIGNED	SCR
CHECKED	SFH
DATE	09/2019
SCALE	N.T.S.
PROJECT NO.	CLR #1-17-ST-56B
SHEET NO.	S6

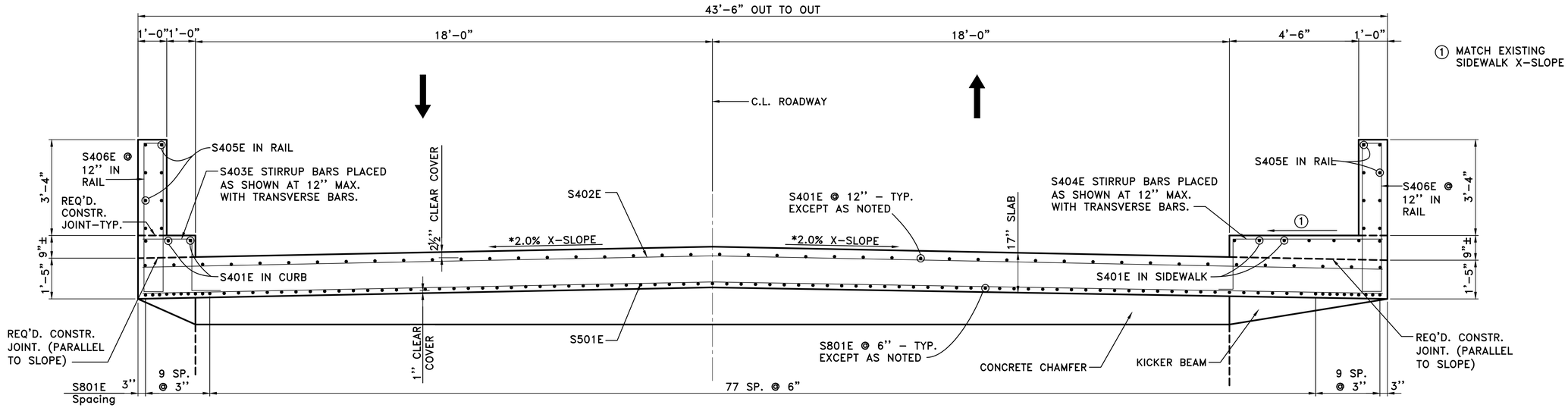

TYPICAL SECTION THRU ROADWAY
½" = 1'-0"

FOR "CONCRETE CHAMFER AND KICKER BEAM DETAIL", SEE SHEET NO. S9.

*THERE ARE NO EXISTING BRIDGE PLANS AVAILABLE. ALL DIMENSIONS AND DATA USED FOR NEW DETAILS SHALL BE FIELD VERIFIED BY CONTRACTOR PRIOR TO FABRICATION TO ENSURE COMPATIBILITY OF NEW WORK WITH THE EXISTING STRUCTURE.

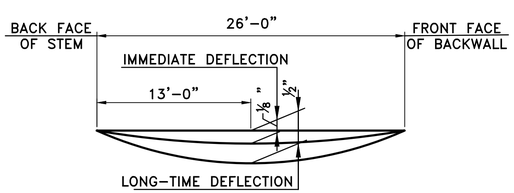

DEFLECTIONS SHOWN ARE FROM A CHORD FROM BACK FACE OF STEM TO FRONT FACE OF BACWALL. VERTICAL ALIGNMENT CORRECTIONS ARE NOT INCLUDED. TOLERANCE +¼" FOR CAMBER AND VERTICAL ALIGNMENT.

DEAD LOAD DEFLECTION DIAGRAM
NO SCALE

GENERAL NOTES

ALL CONCRETE SHALL BE CLASS "S(AE)" WITH A MINIMUM 28 DAY COMPRESSIVE STRENGTH f'c = 4,000 PSI. CONCRETE SHALL BE POURED IN THE DRY AND ALL EXPOSED CORNERS TO BE CHAMFERED ¾" UNLESS OTHERWISE NOTED.

ALL REINFORCING STEEL SHALL BE EPOXY COATED AND CONFORM TO AASHTO M31 OR M322, GRADE 60 (YIELD STRENGTH = 60,000 PSI.).

BAR LIST - SLAB & FOOTING

MARK	NO. REQ'D.	LENGTH	P.D.
S401E	54	25'-8"	STR.
S402E	26	43'-10"	STR.
S403E	26	4'-4"	2"
S404E	26	7'-10"	2"
S405E	32	12'-8"	STR.
S406E	54	12'-0"	2"
S501E	78	43'-10"	STR.
S502E	176	6'-4"	STR.
S503E	45	11'-6"	2½"
S504E	2	39'-10"	STR.
S505E-S508E	1 EACH	4'-0" TO 6'-2"	2½"
S509E	72	3'-8"	STR.
S510E-S520E	1 EACH	4'-0" TO 6'-5"	2½"
S521E	2	4'-11"	3¾"
S522E	2	8'-2"	3¾"
S523E	6	6'-7"	2½"
S801E	96	25'-8"	STR.
S1001E	2	46'-8"	10"

BENDING DIAGRAMS

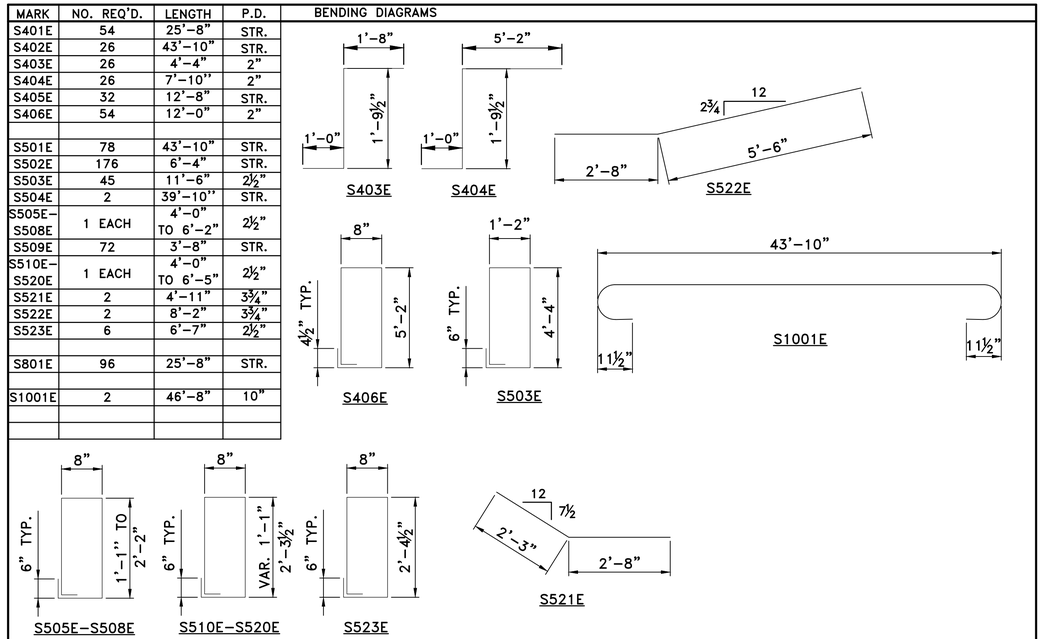

NOTES:
DIMENSIONS OF BARS ARE OUT-TO-OUT.

ALL BARS DESIGNATED WITH AN "E" SUFFIX ARE TO EPOXY COATED.

REVISIONS	DATE

CITY OF LITTLE ROCK, ARKANSAS
13TH ST. BRIDGE REPAIR
REINFORCED CONCRETE SLAB DETAILS

DEPARTMENT OF PUBLIC WORKS
CIVIL ENGINEERING
701 W. MARKHAM
LITTLE ROCK, ARKANSAS 72201

90% COMPLETE

DRAWN BY	KDH
DESIGNED	SCR
CHECKED	SFH
DATE	09/2019
SCALE	AS NOTED
PROJECT NO.	CLR #1-17-ST-56B
SHEET NO.	S7

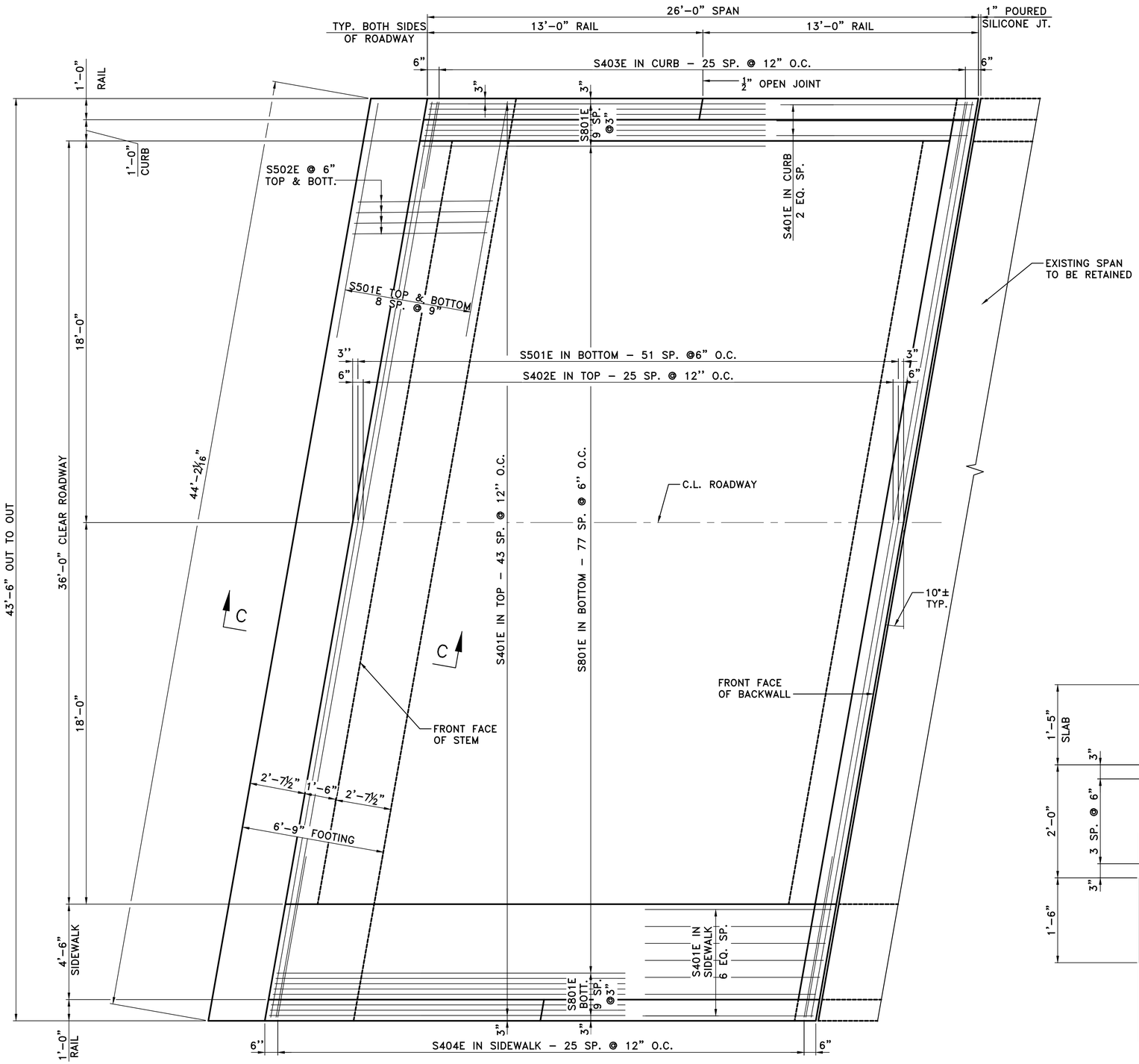

REINFORCING PLAN
3/8" = 1'-0"

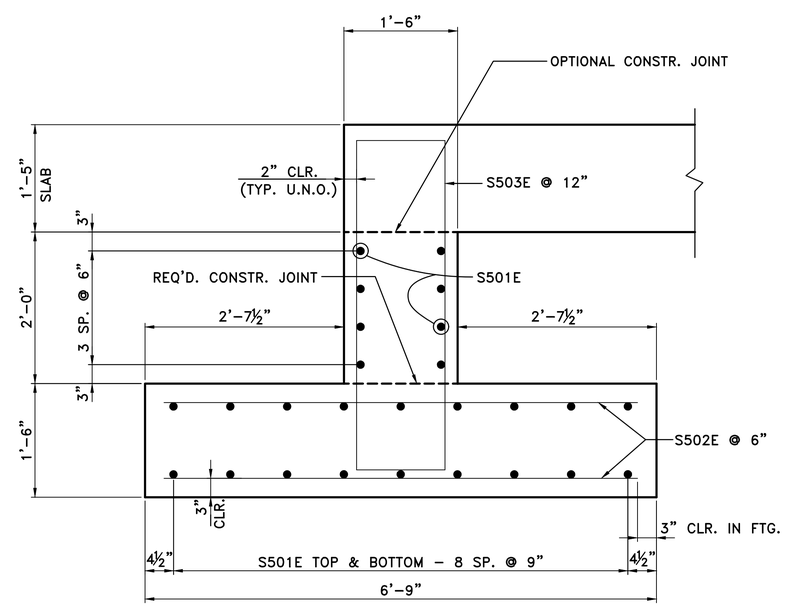

SECTION C-C
1" = 1'-0"

REVISIONS	DATE

CITY OF LITTLE ROCK, ARKANSAS
13TH ST. BRIDGE REPAIR
REINFORCED CONCRETE SLAB DETAILS

DEPARTMENT OF PUBLIC WORKS
CIVIL ENGINEERING
701 W. MARKHAM
LITTLE ROCK, ARKANSAS 72201

90% COMPLETE

DRAWN BY	KDH
DESIGNED	SCR
CHECKED	SFH
DATE	09/2019
SCALE	AS NOTED
PROJECT NO.	CLR #1-17-ST-56B
SHEET NO.	S8

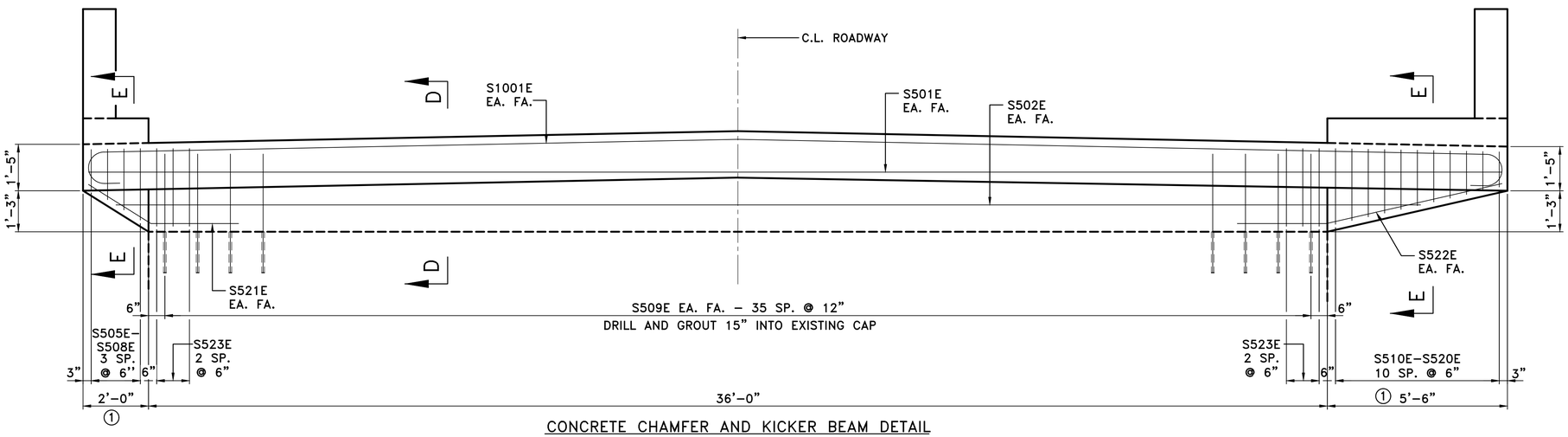

CONCRETE CHAMFER AND KICKER BEAM DETAIL
½" = 1'-0"

1 THE CONTRACTOR SHALL FIELD–VERIFY CANTILEVER DIMENSIONS PRIOR TO CONSTRUCTION.

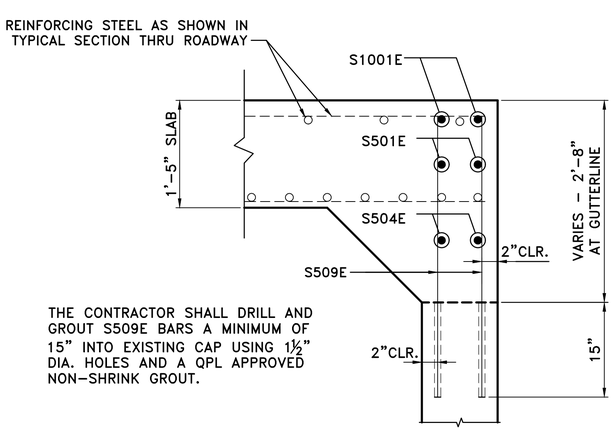

SECTION D–D
1" = 1'-0"

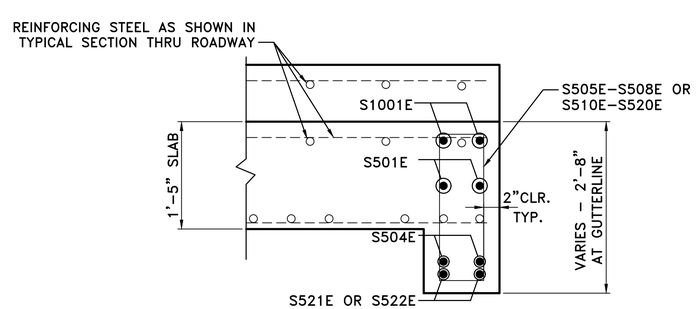

SECTION E–E
1" = 1'-0"

REVISIONS	DATE

CITY OF LITTLE ROCK, ARKANSAS
13TH ST. BRIDGE REPAIR

REINFORCED CONCRETE SLAB DETAILS

DEPARTMENT OF PUBLIC WORKS
CIVIL ENGINEERING
701 W. MARKHAM
LITTLE ROCK, ARKANSAS 72201

90% COMPLETE

DRAWN BY	KDH
DESIGNED	SCR
CHECKED	SFH
DATE	09/2019
SCALE	AS NOTED
PROJECT NO.	CLR #1-17-ST-56B
SHEET NO.	S9

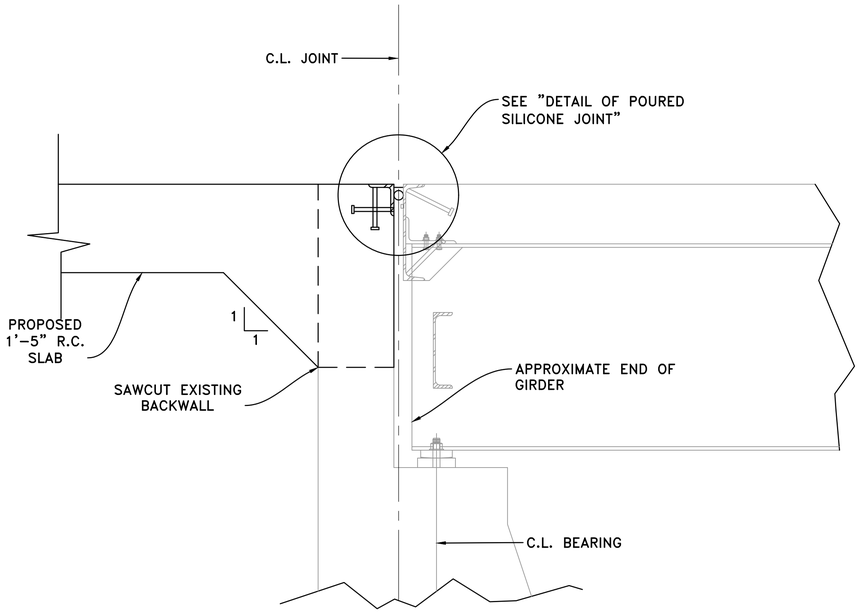

SECTION THRU JOINT AT EXIST. BENT 1

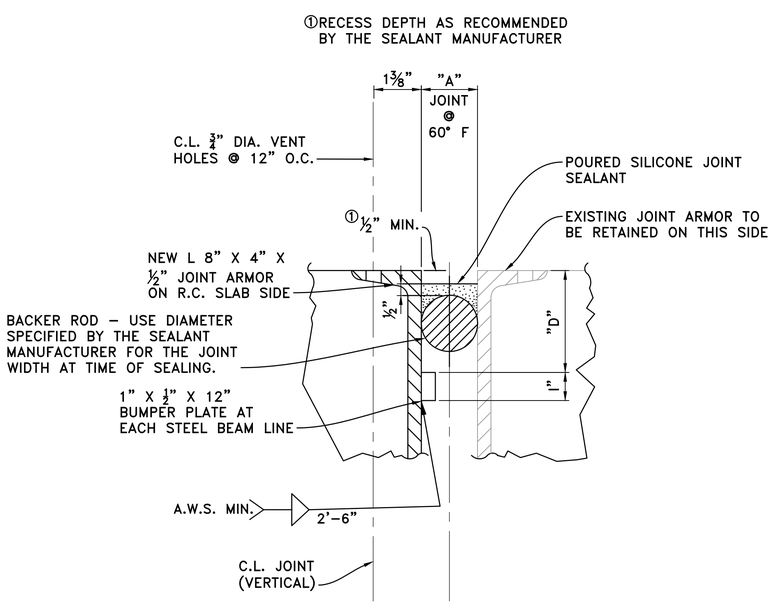

DETAIL OF POURED SILICONE JOINT

NOTE: CONCRETE SHALL BE HAND PACKED UNDER THE JOINT ARMOR IN THE NEW R.C. SLAB SPAN.

SILICONE JOINT DATA

BRIDGE LOCATION	BENT NO.	"A" JOINT WIDTH PERPENDICULAR TO JOINT 24 HOUR AVERAGE TEMPERATURE OF:*			"D"
		40° F	60° F	80° F	
13TH ST. BRIDGE OVER UPRR	1	1⅛"	1"	⅞"	5"

*THE TEMPERATURE USED TO SET THE JOINT OPENING SHALL BE THE APPROXIMATE AVERAGE AIR TEMPERATURE DURING THE 24 HOUR PERIOD IMMEDIATELY BEFORE THE NEW SLAB IS CAST. THE ENGINEER SHALL ESTABLISH THE TEMPERATURE. INTERPOLATION OF THE TABLE MAY BE NECESSARY.

NOTES:
THE TEMPERATURE LIMITATIONS RECOMMENDED BY THE SEALANT MANUFACTURER SHALL BE OBSERVED. THE SEALANT SHALL BE INSTALLED ONLY WHEN THE AVERAGE 24 HOUR AIR TEMPERATURE IS BETWEEN 40° AND 80° F.

USE AN APPROPRIATELY SIZED BACKER ROD AT THE DEPTH SHOWN IN THE MANUFACTURER'S LITERATURE BASED ON THE JOINT WIDTH AT THE TIME OF SEALING. UNLESS OTHERWISE NOTED, DO NOT INSTALL MORE BACKER ROD THAN CAN BE SEALED IN THE SAME DAY.

THE CONTRACTOR SHALL VERIFY SEPARATION OF THE BACKER ROD FOR THE JOINT MATERIAL AFTER THE JOINT MATERIAL HAS SET.

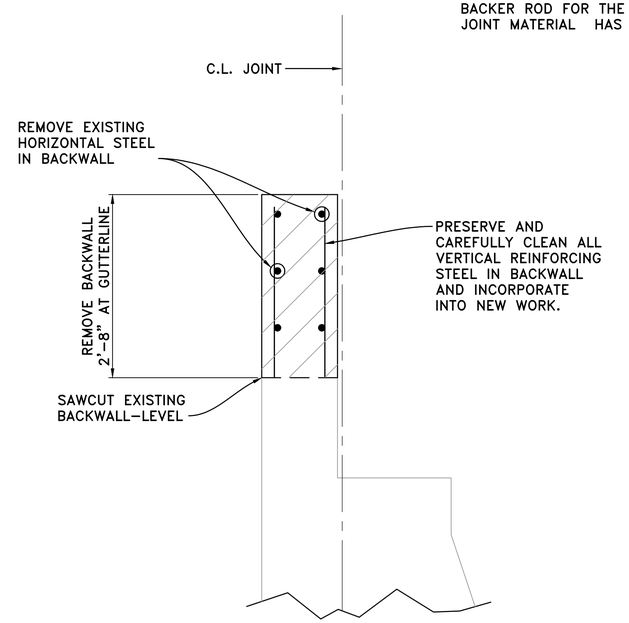

REMOVAL DETAILS

REVISIONS	DATE

CITY OF LITTLE ROCK, ARKANSAS
13TH ST. BRIDGE REPAIR
EXPANSION JOINT DETAILS

DEPARTMENT OF PUBLIC WORKS
CIVIL ENGINEERING
701 W. MARKHAM
LITTLE ROCK, ARKANSAS 72201

90% COMPLETE

DRAWN BY	JPC
DESIGNED	SCR
CHECKED	SFH
DATE	09/2019
SCALE	N.T.S
PROJECT NO.	CLR#1-17-ST-56B
SHEET NO.	S10

THERE ARE NO EXISTING BRIDGE PLANS AVAILABLE. ALL DIMENSIONS AND DATA USED FOR NEW DETAILS SHALL BE FIELD VERIFIED BY CONTRACTOR PRIOR TO FABRICATION TO ENSURE COMPATIBILITY OF NEW WORK WITH THE EXISTING STRUCTURE.

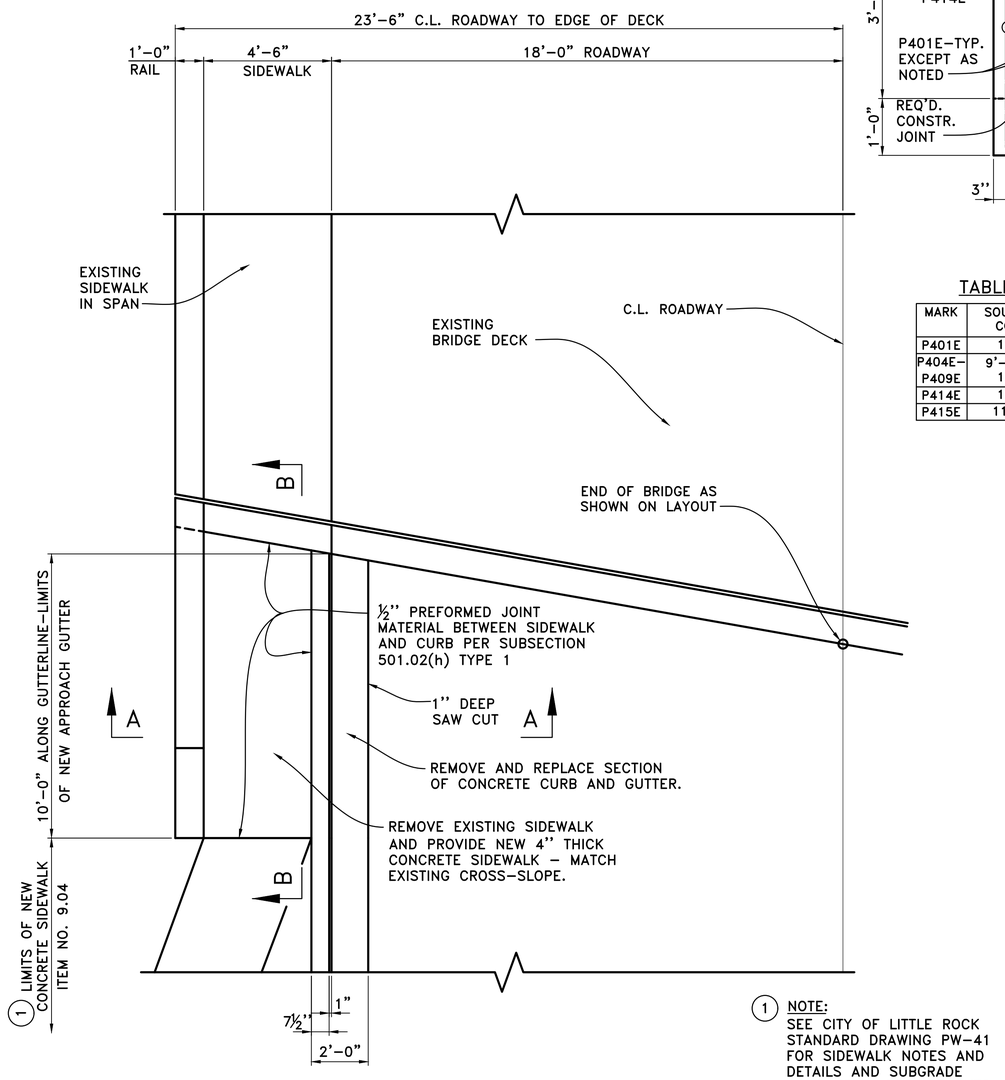

PLAN OF APPROACH GUTTER
(SHOWN AT SOUTHEAST CORNER OF BRIDGE SOUTHWEST CORNER SIMILAR)
⅜" = 1'-0"

1 NOTE:
SEE CITY OF LITTLE ROCK STANDARD DRAWING PW-41 FOR SIDEWALK NOTES AND DETAILS AND SUBGRADE COMPACTION REQUIREMENTS.

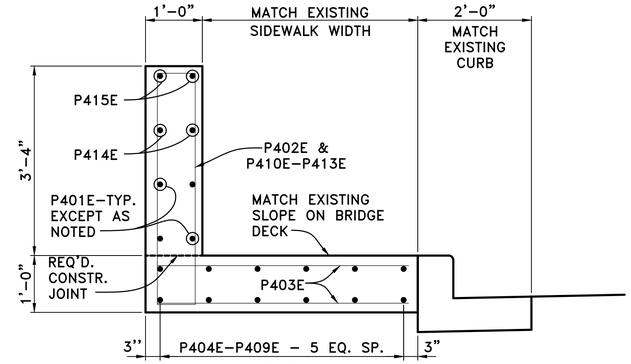

SECTION A-A
¾" = 1'-0"

BAR LIST – PER APPROACH GUTTER

MARK	NO. REQ'D.	LENGTH	P.D.
P401E	4	SEE TABLE	STR.
P402E	8	9'-8"	2"
P403E	24	4'-5"	STR.
P404E-P409E	2 EACH	SEE TABLE	STR.
P410E-P413E	1 EACH	6'-8" TO 9'-6"	2"
P414E	2	SEE TABLE	STR.
P415E	2	SEE TABLE	2"
P416E	1	7'-8"	2"

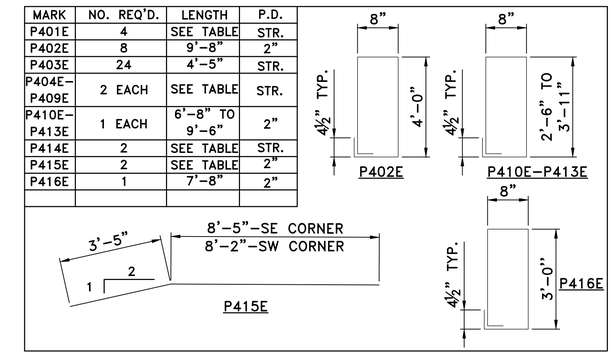

TABLE OF VARIABLES

MARK	SOUTHEAST CORNER	SOUTHWEST CORNER
P401E	11'-5"	11'-3"
P404E-P409E	9'-10" TO 10'-6"	9'-7" TO 10'-3"
P414E	10'-5"	10'-2"
P415E	11'-10"	11'-7"

GENERAL NOTES

ALL CONCRETE SHALL BE CLASS "S(AE)" WITH A MINIMUM 28 DAY COMPRESSIVE STRENGTH f'c = 4,000 PSI. CONCRETE SHALL BE POURED IN THE DRY AND ALL EXPOSED CORNERS TO BE CHAMFERED ¾" UNLESS OTHERWISE NOTED.

ALL REINFORCING STEEL SHALL BE EPOXY COATED AND CONFORM TO AASHTO M31 OR M322, GRADE 60 (YIELD STRENGTH = 60,000 PSI.).

NOTES:
DIMENSIONS OF BARS ARE OUT-TO-OUT.

ALL BARS DESIGNATED WITH AN "E" SUFFIX ARE TO EPOXY COATED.

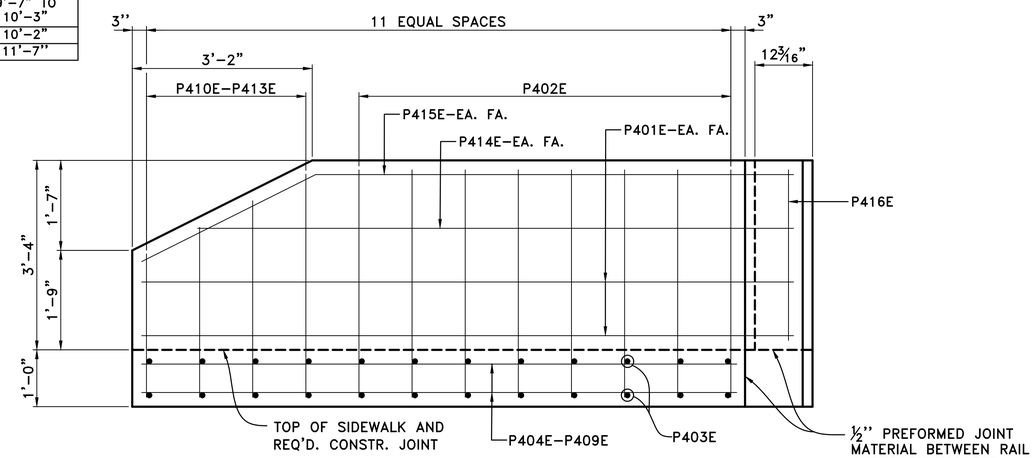

SECTION B-B
¾" = 1'-0"

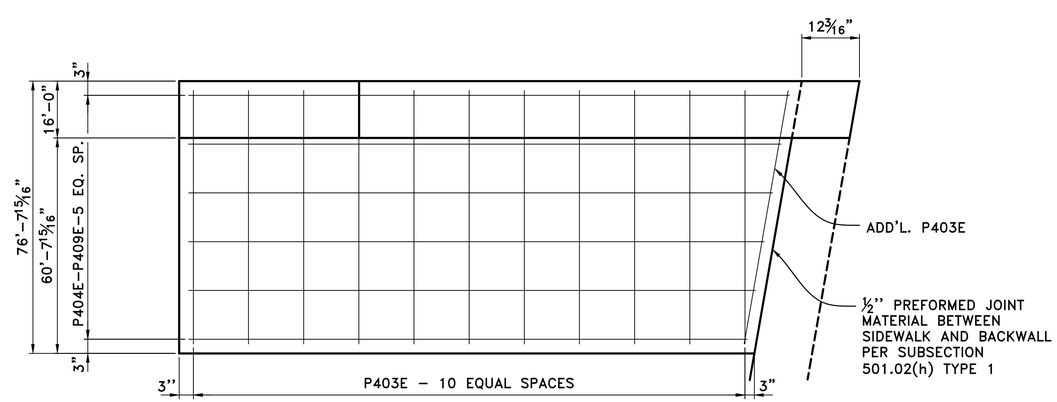

APPROACH GUTTER REINFORCING PLAN
¾" = 1'-0"

REVISIONS	DATE

CITY OF LITTLE ROCK, ARKANSAS
13TH ST. BRIDGE REPAIR
APPROACH GUTTER DETAILS

DEPARTMENT OF PUBLIC WORKS
CIVIL ENGINEERING
701 W. MARKHAM
LITTLE ROCK, ARKANSAS 72201

90% COMPLETE

DRAWN BY	KDH
DESIGNED	SCR
CHECKED	SFH
DATE	09/2019
SCALE	AS NOTED
PROJECT NO.	CLR #1-17-ST-56B
SHEET NO.	S11

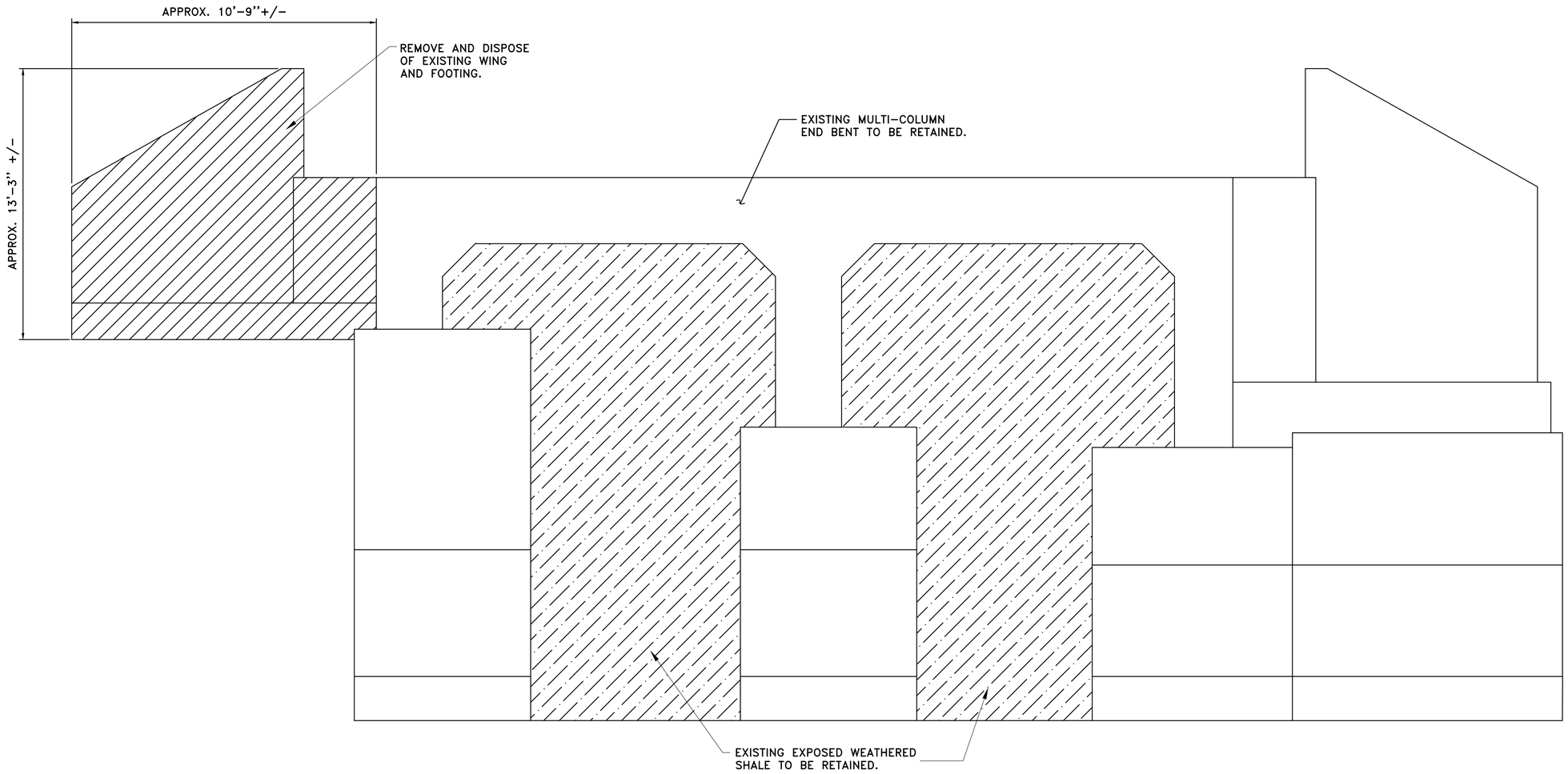

BENT 1 ELEVATION

LOOKING BACK

REVISIONS	DATE

CITY OF LITTLE ROCK, ARKANSAS
13TH ST. BRIDGE REPAIR

END BENT 1 DETAILS

DEPARTMENT OF PUBLIC WORKS
CIVIL ENGINEERING
701 W. MARKHAM
LITTLE ROCK, ARKANSAS 72201

90% COMPLETE

DRAWN BY	KDH
DESIGNED	SCR
CHECKED	SFH
DATE	09/2019
SCALE	N.T.S.
PROJECT NO.	CLR #1-17-ST-56B
SHEET NO.	S12

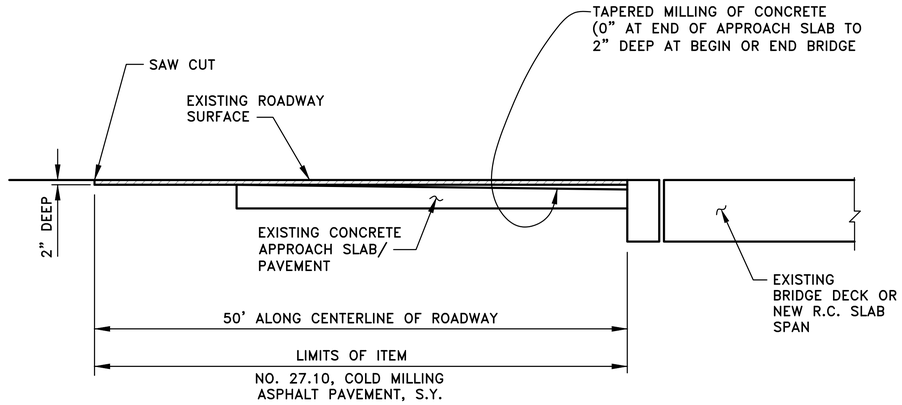

STEP 1: ASPHALT REMOVAL AT BRIDGE ENDS

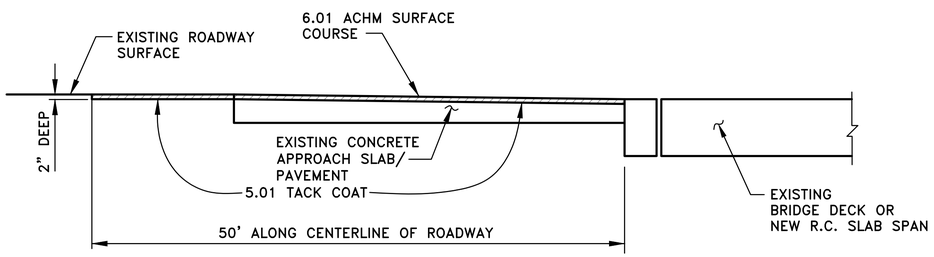

STEP 2: SURFACE COURSE APPLICATION AT BRIDGE ENDS
ASPHALT TRANSITION DETAILS

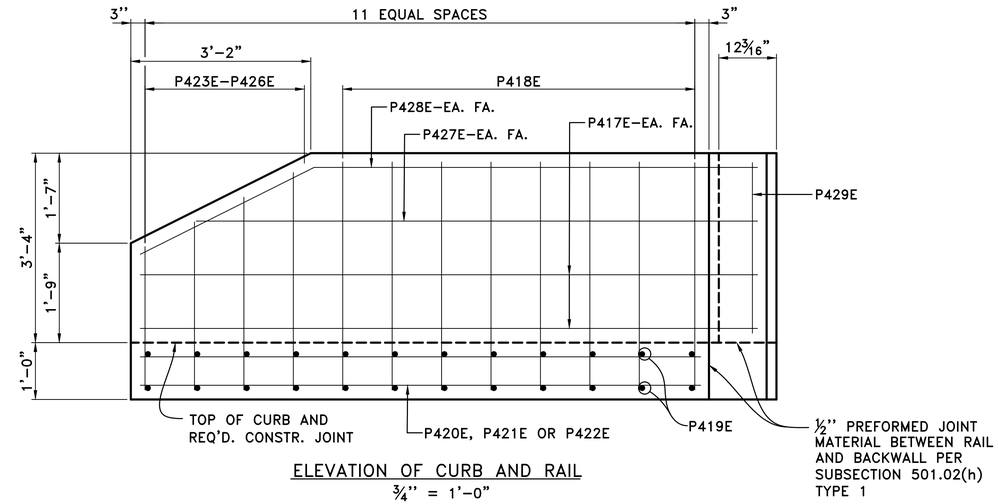

ELEVATION OF CURB AND RAIL
¾" = 1'-0"

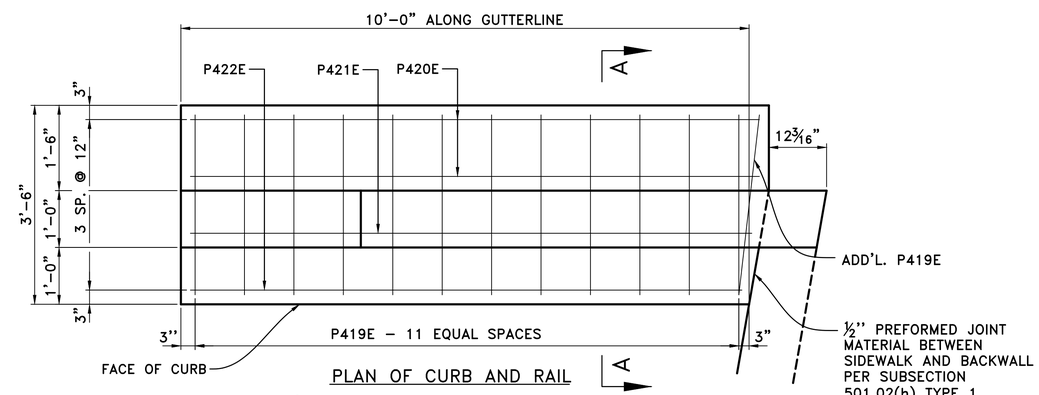

PLAN OF CURB AND RAIL
(SHOWN AT NORTHWEST CORNER OF BRIDGE
NORTHEAST CORNER SIMILAR)
¾" = 1'-0"

TABLE OF VARIABLES

MARK	NORTHWEST CORNER	NORTHEAST CORNER
P417E	10'-10"	10'-6"
P420E	10'-0"	9'-5"
P421E	9'-10"	9'-7"
P422E	9'-8"	9'-9"
P427E	9'-10"	9'-6"
P428E	11'-2"	10'-10"

BAR LIST - PER CURB AND RAIL

MARK	NO. REQ'D.	LENGTH	P.D.
P417E	4	SEE TABLE	STR.
P418E	8	9'-8"	2"
P419E	26	3'-2"	STR.
P420E	4	SEE TABLE	STR.
P421E	2	SEE TABLE	STR.
P422E	2	SEE TABLE	STR.
P423E-P426E	1 EACH	6'-8" TO 9'-6"	2"
P427E	2	SEE TABLE	STR.
P428E	2	SEE TABLE	2"
P429E	1	7'-8"	2"

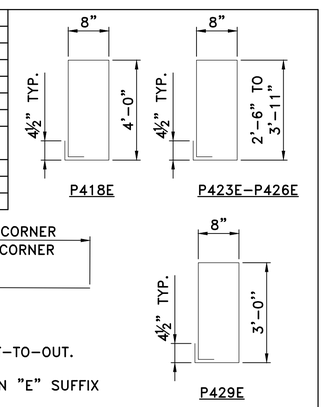

NOTES:
DIMENSIONS OF BARS ARE OUT-TO-OUT.

ALL BARS DESIGNATED WITH AN "E" SUFFIX ARE TO EPOXY COATED.

GENERAL NOTES

ALL CONCRETE SHALL BE CLASS "S(AE)" WITH A MINIMUM 28 DAY COMPRESSIVE STRENGTH f'c = 4,000 PSI. CONCRETE SHALL BE POURED IN THE DRY AND ALL EXPOSED CORNERS TO BE CHAMFERED ¾" UNLESS OTHERWISE NOTED.

ALL REINFORCING STEEL SHALL BE EPOXY COATED AND CONFORM TO AASHTO M31 OR M322, GRADE 60 (YIELD STRENGTH = 60,000 PSI.).

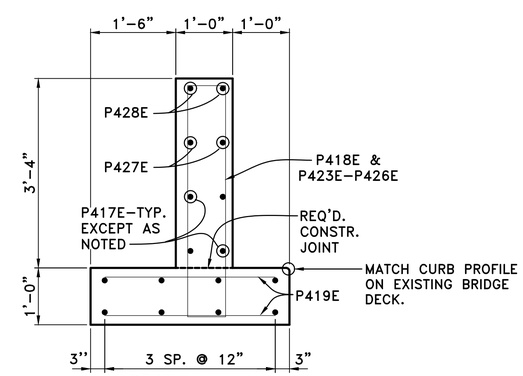

SECTION A-A
¾" = 1'-0"

REVISIONS	DATE

CITY OF LITTLE ROCK, ARKANSAS
13TH ST. BRIDGE REPAIR
MISCELLANEOUS DETAILS

DEPARTMENT OF PUBLIC WORKS
CIVIL ENGINEERING
701 W. MARKHAM
LITTLE ROCK, ARKANSAS 72201

90% COMPLETE

DRAWN BY	KDH
DESIGNED	SCR
CHECKED	SFH
DATE	09/2019
SCALE	N.T.S
PROJECT NO.	CLR #1-17-ST-56B
SHEET NO.	S13

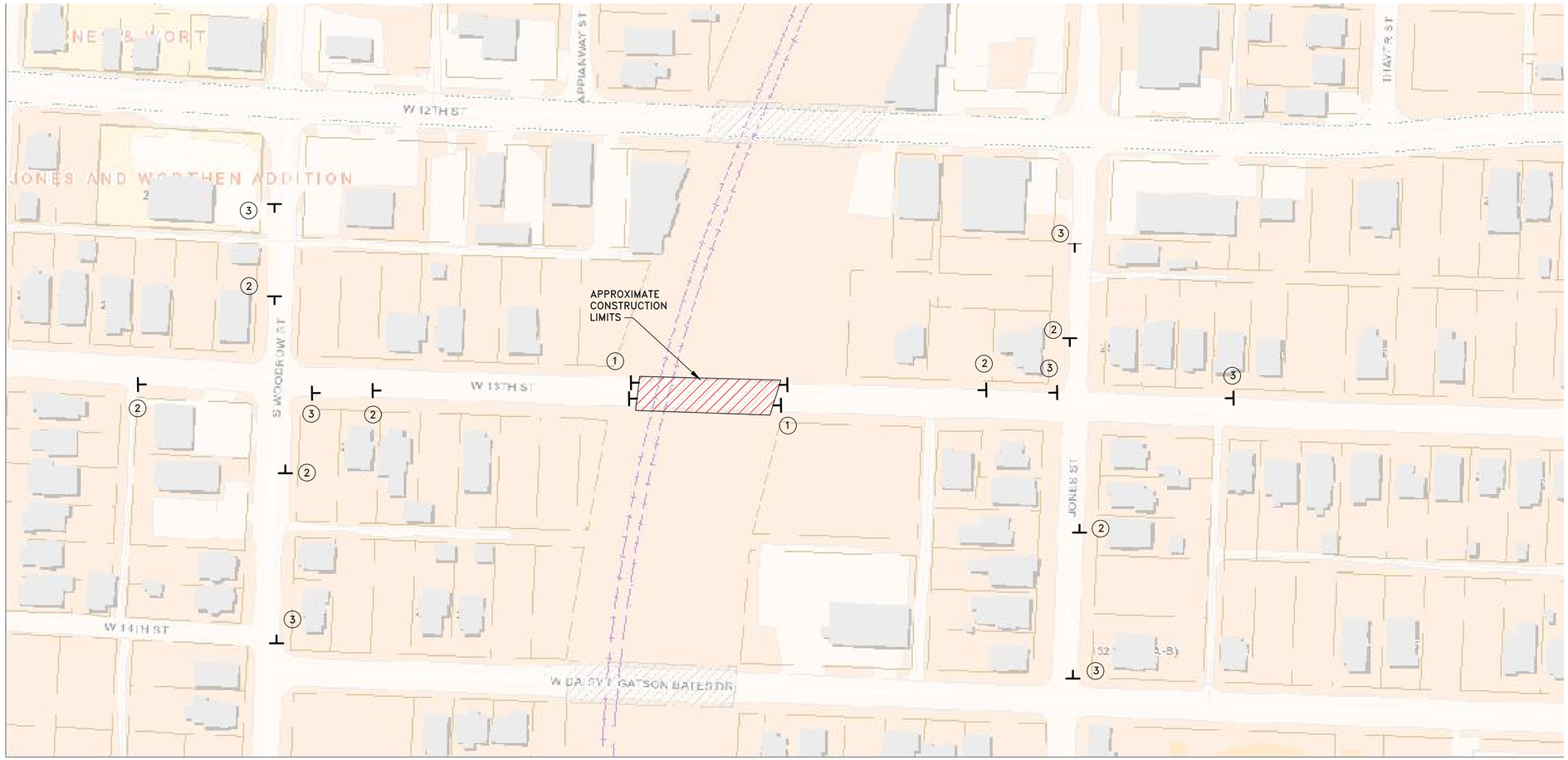

MAINTENANCE OF TRAFFIC NOTES:

1. THE 13th. BRIDGE (UNION PACIFIC RAILROAD OVERPASS) SHALL BE CLOSED TO ALL THRU VEHICULAR AND PEDESTRIAN TRAFFIC DURING THE LIFE OF THE CONSTRUCTION PROJECT. (LOCAL TRAFFIC ONLY)

2. THE CONTRACTOR SHALL PROVIDE, INSTALL, AND MAINTAIN ALL TRAFFIC CONTROL DEVICES.

3. ALL TRAFFIC CONTROL DEVICES SHALL BE IN STRICT ACCORDANCE WITH THE MANUAL ON UNIFORM TRAFFIC CONTROL DEVICES (CURRENT EDITION).

4. THE CONTRACTOR SHALL USE WHATEVER MEANS NECESSARY TO ENSURE THAT PEDESTRIANS DO NOT ENTER WORK AREAS AND THAT OPEN CONSTRUCTION IS PROTECTED.

5. THE CONTRACTOR SHALL STRICTLY COORDINATE THE BRIDGE CLOSURE WITH THE CITY OF LITTLE ROCK.

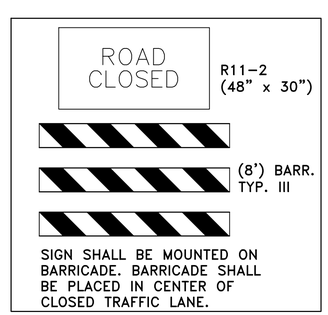

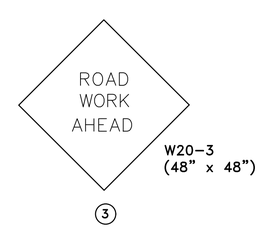

REVISIONS	DATE

CITY OF LITTLE ROCK, ARKANSAS
13TH. ST. BRIDGE REPAIR

MAINTENANCE OF TRAFFIC

DEPARTMENT OF PUBLIC WORKS
CIVIL ENGINEERING
701 W. MARKHAM
LITTLE ROCK, ARKANSAS 72201

90% COMPLETE

DRAWN BY	SCR
DESIGNED	SCR
CHECKED	SFH
DATE	09/2019
SCALE	N.T.S.
PROJECT NO.	CLR #1-17-ST-56B
SHEET NO.	S14