CLR PROJECT 03-15-DR-95
S. VALENTINE STREET DRAINAGE IMPROVEMENTS
MARKHAM STREET TO WEST 3RD STREET

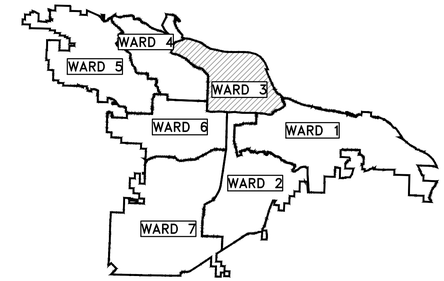

PROJECT LOCATION – WARD 3

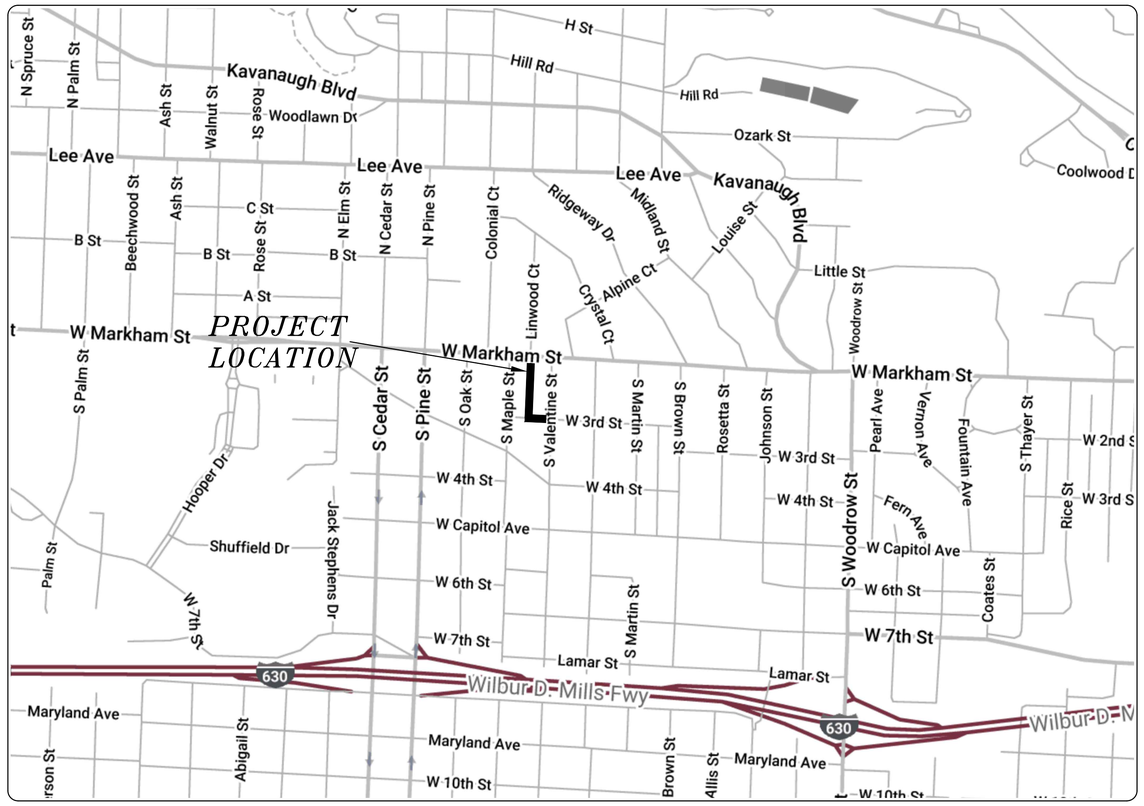

SHEET NO.	TITLE
C1	COVER SHEET
C2	QUANTITIES & DETAILS
C3	TYPICAL SECTIONS
C4 - C8	SPECIAL DETAILS
C9	FIELD TIES/LAYOUT
C10	BOX CULVERT 1
C11	BOX CULVERT 2
C12	ALLEY
C13	DRIVEWAY DETAILS 1
C14	EROSION CONTROL
C15	MAINTENANCE OF TRAFFIC
C16	CROSS SECTIONS

PUBLIC WORKS · CITY OF LITTLE ROCK ·

2019-2021
BOND PROGRAM

DEPARTMENT OF PUBLIC WORKS
CIVIL ENGINEERING
701 WEST MARKHAM STREET
LITTLE ROCK, ARKANSAS 72201

CERTIFICATE OF AUTHORIZATION
GARVER LLC
No. 766
ARKANSAS ENGINEER

811 Know what's below. Call before you dig.

GARVER
4701 Northshore Drive
North Little Rock, AR 72118
501-376-3633

REVISIONS	DATE

CITY OF LITTLE ROCK, ARKANSAS
S. VALENTINE STREET DRAINAGE IMPROVEMENTS
COVER SHEET

DEPARTMENT OF PUBLIC WORKS
CIVIL ENGINEERING
701 W. MARKHAM
LITTLE ROCK, ARKANSAS 72201

STATE OF ARKANSAS
LICENSED PROFESSIONAL ENGINEER
No.18314
RICHARD C. CORBYN
Digitally Signed 02/03/2020

DRAWN BY	MJM
DESIGNED	MJM
CHECKED	RCC
DATE	2-3-2020
SCALE	N.T.S.
PROJECT NO.	03-15-DR-95
SHEET NO.	C1

	CLR PROJECT# 03-15-DR-95		
	S. VALENTINE STREET DRAINAGE IMPROVEMENTS		
	February 3, 2020		
ITEM #	**ITEM DESCRIPTION**	**UNIT**	**QUANTITY**
2.01	SITE PREPARATION	LS	1
3.01	UNCLASSIFIED EXCAVATION	CY	60
3.06	BORROW MATERIAL	CY	60
3.40	TOPSOIL	CY	93
4.01	AGGREGATE BASE COURSE	TON	116
6.01	ACHM SURFACE COURSE	TON	37
7.06	CONCRETE DRIVEWAY (6" THICK), STANDARD FINISH	SF	436
7.08	ALLEY TURNOUT (8" THICK)	SF	215
8.03	CONCRETE CURB AND GUTTER (CLASS 3)	LF	204
8.05	CONCRETE CURB AND GUTTER (TYPE SPECIAL)	LF	40
9.04	CONCRETE SIDEWALK (4" THICK)	SF	73
10.02	AREA INLET	EA	2
10.03	JUNCTION BOX WITH GRATE	EA	1
10.04	CURB INLET - 4' BOX	EA	6
10.10	WING 6' EXTENSION	EA	3
10.14	WING 10' EXTENSION	EA	4
11.01	8'x3' REINFORCED CONCRETE PRECAST BOX CULVERT	LF	503
11.03	REINFORCED CONCRETE BOX CULVERT TRANSITION	CY	15
11.11	CONCRETE PIPE COLLAR	EA	1
13.18S	STORM DRAIN PIPE, 18" SIDE DRAIN	LF	9
13.24X	STORM DRAIN PIPE, 24" CROSS DRAIN	LF	36
13.30S	STORM DRAIN PIPE, 30" SIDE DRAIN	LF	7
14.01	SOLID SODDING, BERMUDA	SY	839
16.01	MAINTENANCE OF TRAFFIC	LS	1
17.02	CUT & REPAIR EXISTING STREET	SY	275
19.01	FINAL CLEANUP	LS	1
24.02	CHECK DAM (CD)	CY	5
24.06	SEDIMENT BARRIER, SILT FENCE (SD1)	EA	8
24.09	SEDIMENT BARRIER, BLOCK (SD4)	EA	9
24.12	SILT FENCE - TYPE B (SFB)	LF	384
25.04	FENCE CHAIN LINK (4')	LF	48
25.16	FENCE WOOD (6')	LF	238
25.44	FENCE GATE, CHAIN LINK DOUBLE SWING (4')	LF	9
25.56	FENCE GATE, WOOD (6')	LF	16
26.10	TRENCH & EXCAVATION SAFETY	LS	1

GENERAL NOTES:

1. ALL EXISTING STRUCTURES OR UTILITIES WITHIN THE LIMITS OF EXISTING OR PROPOSED EASEMENTS SHALL REMAIN UNDISTURBED UNLESS OTHERWISE NOTED ON THE PLANS.

2. WHERE EXCAVATION ENDANGERS THE STABILITY OF A BUILDING, WALL, STREET, UTILITIES OR OTHER INSTALLATION, THE CONTRACTOR SHALL PROVIDE SUPPORT SYSTEMS SUCH AS SHORING, BRACING, OR UNDERPINNING TO ENSURE STABILITY OF SUCH STRUCTURE OR UTILITY. PRIOR TO CONSTRUCTION OF THE SHORING SYSTEM, THE CONTRACTOR SHALL SUBMIT THE DESIGN AND DETAILS OF THE THE SYSTEM TO THE ENGINEER FOR INFORMATIONAL AND RECORD PURPOSES. THE DESIGN AND DETAILS SHALL BE PREPARED AND/OR APPROVED BY A PROFESSIONAL ENGINEER REGISTERED IN ARKANSAS. THE CONTRACTOR SHALL BE RESPONSIBLE FOR THE ADEQUACY OF THE TEMPORARY SHORING DURING THE ENTIRE PERIOD OF CONSTRUCTION.

EXISTING

- IRON ROD — IR
- PK NAIL — PK
- R.R. SPIKE — RR(Sp)
- CONC. MONUMENT — CM
- WATER VALVE — WV
- WATER METER — WM
- FIRE HYDRANT — FH
- GAS METER — GM
- GAS VALVE — GV
- CLEAN-OUT — CO
- GUARD POST (BOLLARD) — GP
- SIGN POST
- BENCHMARK
- STORM SEWER MANHOLE — D
- SANITARY SEWER MANHOLE — S
- TELEPHONE MANHOLE — T
- ELECTRIC MANHOLE — E
- TELEPHONE BOX — T
- ELECTRIC BOX — E
- CABLE BOX — C
- UTILITY POLE
- GUY WIRE
- LIGHT POLE
- POST OR POLE (TYPE AS NOTED)
- MAILBOX
- DECIDUOUS TREE
- EVERGREEN/CONIFEROUS TREE
- BUSH
- PROPERTY LINE
- SETBACK LINE
- EASEMENT LINE
- CURB
- FENCE — X — X
- OVERHEAD UTILITY — OHP — OHP
- UNDERGROUND TELEPHONE — UGT — UGT — UGT
- UNDERGROUND ELECTRIC — UGE — UGE — UGE
- WATER LINE — 8"W — 8"W — 8"W
- SEWER LINE — SAN
- GAS LINE — GAS — GAS — GAS
- STORM SEWER/CULVERT — 24" CMP/RCP/DIP
- CONTOUR LINE — 650

PROPOSED

- CONTOUR — 25
- SPOT ELEVATION — 25.00
- SPOT CURB ELEVATION — 25.50 / 25.00
- STORM SEWER – PIPE
- STORM SEWER – MITERED END SECTION
- STORM SEWER – GRATE INLET
- STORM SEWER – JUNCTION BOX — D D
- STORM SEWER – FLARED END SECTION
- STORM SEWER – HEADWALL
- STORM SEWER – INLET WITH SINGLE EXTENSION — D
- STORM SEWER – INLET WITH DOUBLE EXTENSION — D
- STORM SEWER – AREA INLET — D
- GRADE BREAK LINE
- HIGH POINT — HP
- LOW POINT — LP
- CUT LINE — C
- FILL LINE — F
- SANITARY SEWER PIPE
- SANITARY SEWER MANHOLE — S
- CURB
- CONCRETE
- CONSTRUCTION – ENTRANCE/EXIT — CO
- CHECK DAM — CD
- DIVERSION BERM — DI
- DOWNDRAIN STRUCTURE – TEMPORARY — DN
- ROCK DAM — RD
- SEDIMENT BARRIER – SILT FENCE — SD1
- SEDIMENT BARRIER – GRAVEL RING — SD2
- SEDIMENT BARRIER – BLOCK & GRAVEL — SD3
- SEDIMENT BARRIER – BLOCK — SD4
- TEMPORARY SEDIMENT BASIN — SB1
- SILT FENCE – TYPE A — SFA
- SILT FENCE – TYPE B — SFB
- SILT FENCE – TYPE C — SFC
- STORM DRAIN OUTLET PROTECTION — ST
- SURFACE ROUGHENING — SU
- DISTURBED AREA STABILIZATION –TEMPORARY STABILIZATION — TS1
- DISTURBED AREA STABILIZATION –TEMPORARY GRASSING — TS2
- DISTURBED AREA STABILIZATION –PERMANENT GRASSING — TS3
- MATTING/BLANKETS — Mb

REVISIONS	DATE

CITY OF LITTLE ROCK, ARKANSAS
S. VALENTINE STREET DRAINAGE IMPROVEMENTS
QUANTITIES & DETAILS

DEPARTMENT OF PUBLIC WORKS
CIVIL ENGINEERING
701 W. MARKHAM
LITTLE ROCK, ARKANSAS 72201

STATE OF ARKANSAS
LICENSED PROFESSIONAL ENGINEER
No.18314
RICHARD C. CORBYN
Digitally Signed 02/03/2020

DRAWN BY	MJM
DESIGNED	MJM
CHECKED	RCC
DATE	2-3-2020
SCALE	N.T.S.
PROJECT NO.	03-15-DR-95
SHEET NO.	C2

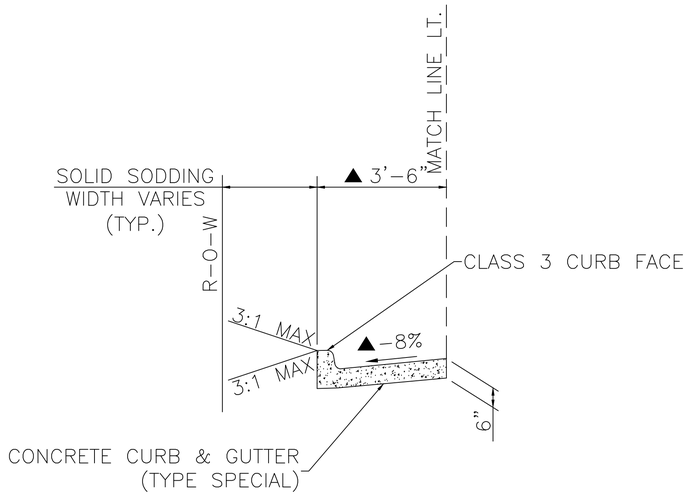

TYPICAL SECTION

STA. 10+67.50 TO STA. 11+09.34

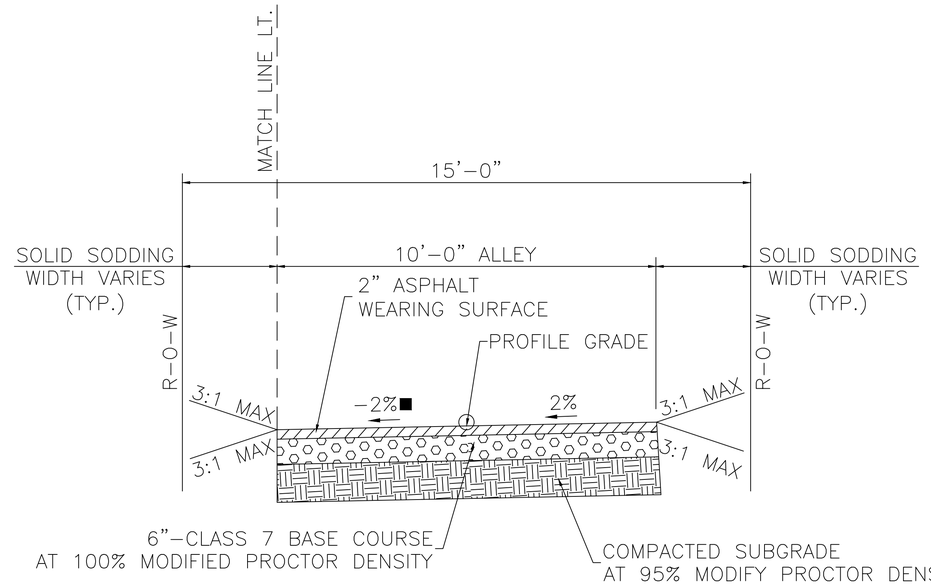

ALLEY TYPICAL SECTION

STA. 10+78.00 TO STA. 11+24.00

■ TRANSITION CROSS SLOPE FROM -2% TO +2% BETWEEN STA. 10+94.00 AND STA. 11+24.00. SEE DRIVEWAY DETAILS FOR ADDITIONAL INFORMATION.

▲ WIDTH AND SLOPE VARIES. SEE DRIVEWAY DETAILS FOR ADDITIONAL INFORMATION.

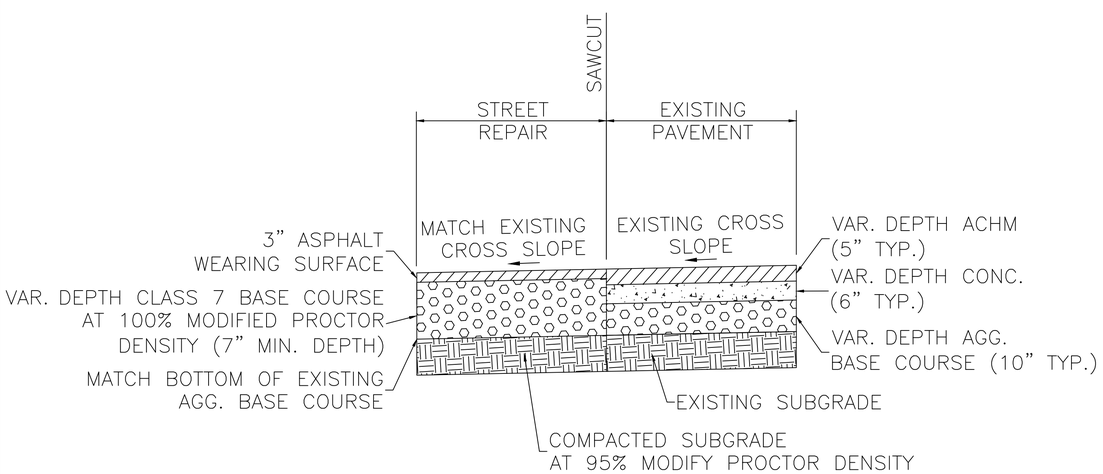

CUT & REPAIR EXISTING STREET

W. 3RD ST.
S. VALENTINE ST.

NOTES:

1) SEE CLR STD. DETAIL PW-22 FOR ADDITIONAL GENERAL NOTES.
2) PAYMENT FOR CUT & REPAIR OF EXISTING STREET ON W. 3RD ST. AND S. VALENTINE ST. SHALL BE MADE AT THE CONTRACT UNIT PRICE BID PER SQUARE YARD FOR "CUT AND REPAIR EXISTING STREET," WHICH PRICE SHALL BE FULL COMPENSATION FOR THE COMPLETE RESTORATION OF THE STREET IN ACCORDANCE WITH THIS DETAIL.

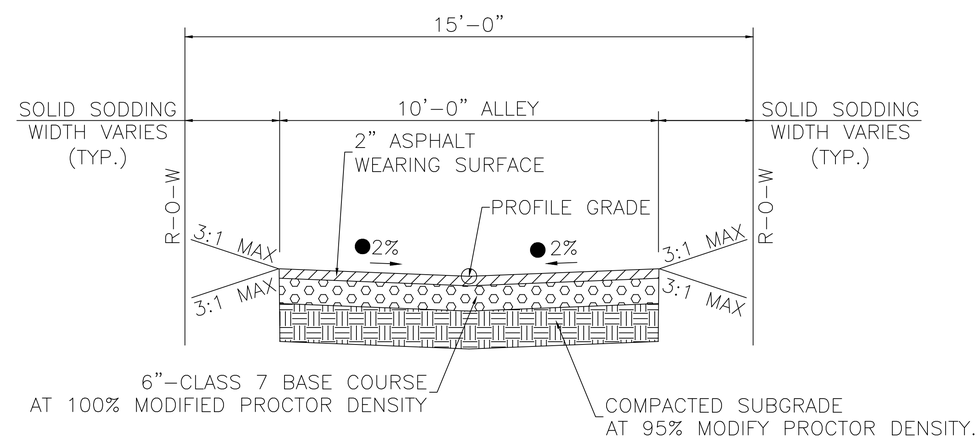

ALLEY TYPICAL SECTION

STA. 11+24.00 TO STA. 13+87.27

● TRANSITION CROSS SLOPE AS ALLEY APPROACHES W. 3RD ST. SEE DRIVEWAY DETAILS FOR ADDITIONAL INFORMATION

REVISIONS	DATE

CITY OF LITTLE ROCK, ARKANSAS
S. VALENTINE STREET DRAINAGE IMPROVEMENTS

TYPICAL SECTIONS

DEPARTMENT OF PUBLIC WORKS
CIVIL ENGINEERING
701 W. MARKHAM
LITTLE ROCK, ARKANSAS 72201

STATE OF ARKANSAS
LICENSED PROFESSIONAL ENGINEER
No.18314
RICHARD C. CORBYN
Digitally Signed 02/03/2020

DRAWN BY	MJM
DESIGNED	MJM
CHECKED	RCC
DATE	2-3-2020
SCALE	N.T.S.
PROJECT NO.	03-15-DR-95
SHEET NO.	C3

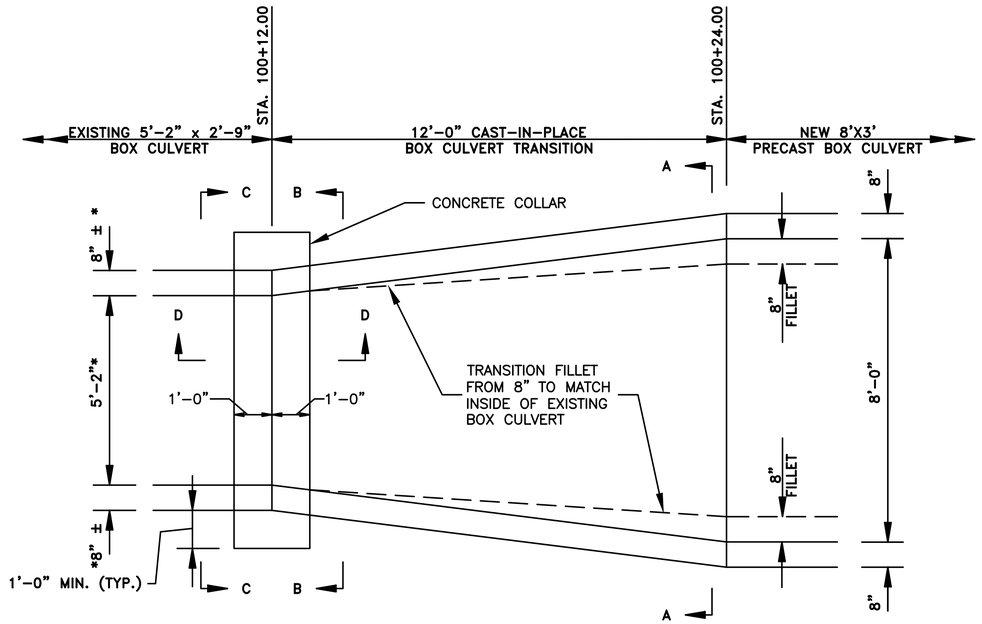

PLAN

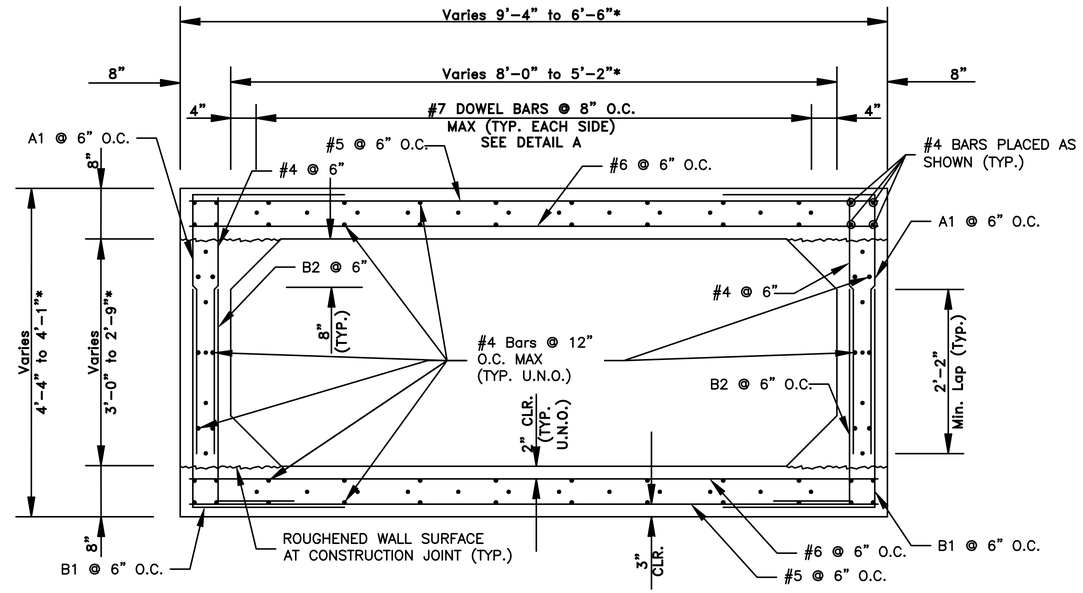

SECTION A–A

LEGEND

U.N.O – UNLESS NOTED OTHERWISE

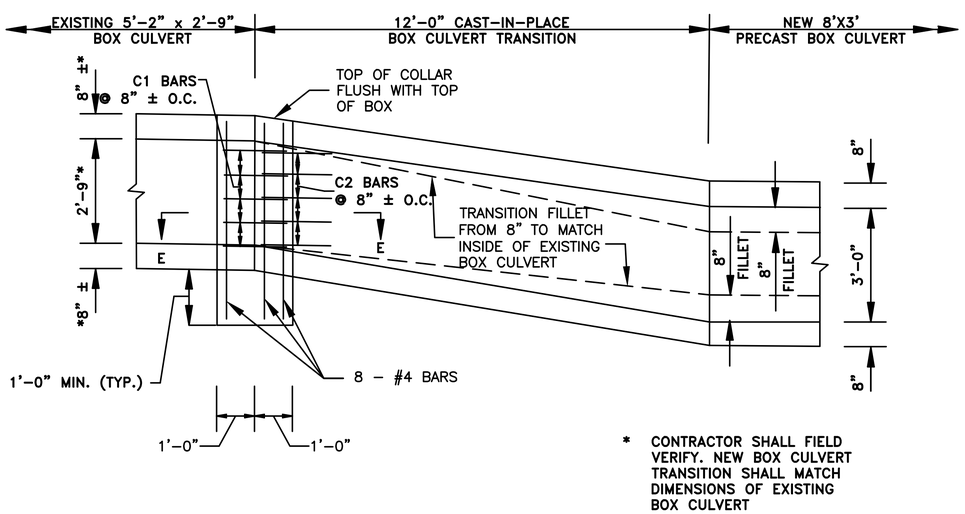

* CONTRACTOR SHALL FIELD VERIFY. NEW BOX CULVERT TRANSITION SHALL MATCH DIMENSIONS OF EXISTING BOX CULVERT

ELEVATION

SHOWING DIMENSIONS AND COLLAR REINFORCEMENT

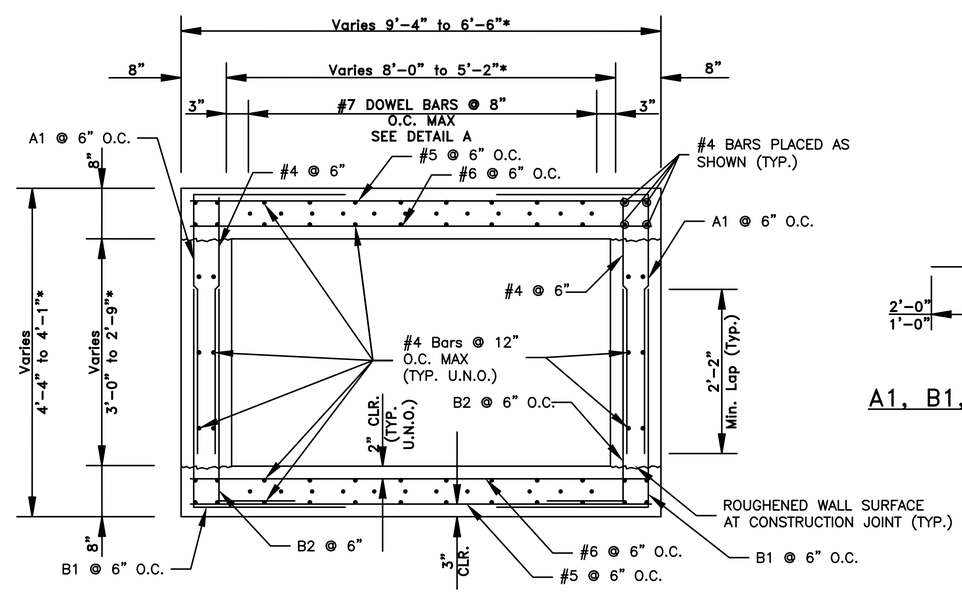

SECTION B–B

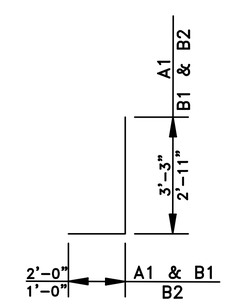

A1, B1, & B2 – #5

REVISIONS	DATE

CITY OF LITTLE ROCK, ARKANSAS
S. VALENTINE STREET DRAINAGE IMPROVEMENTS

SPECIAL DETAILS

DEPARTMENT OF PUBLIC WORKS
CIVIL ENGINEERING
701 W. MARKHAM
LITTLE ROCK, ARKANSAS 72201

STATE OF ARKANSAS
LICENSED PROFESSIONAL ENGINEER
No.18314
RICHARD C. CORBYN
Digitally Signed 02/03/2020

DRAWN BY	AMW
DESIGNED	WMM
CHECKED	RCC
DATE	2-3-2020
SCALE	N.T.S.
PROJECT NO.	03-15-DR-95
SHEET NO.	C4

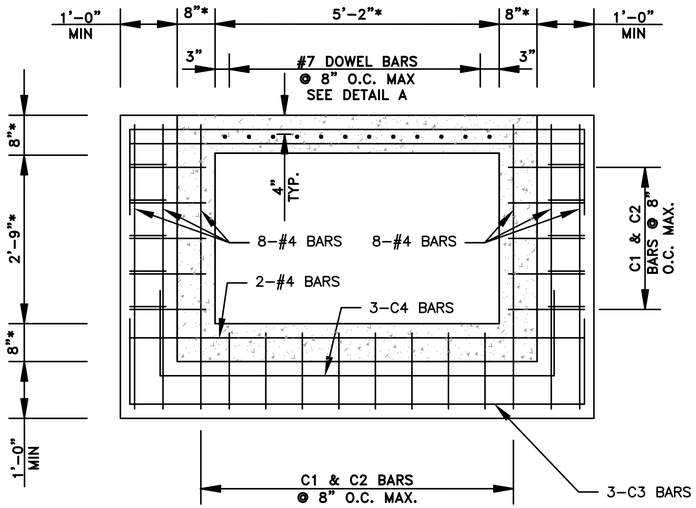

SECTION C-C

SHOWING COLLAR REINFORCEMENT

* CONTRACTOR SHALL FIELD VERIFY. NEW BOX CULVERT TRANSITION SHALL MATCH DIMENSIONS OF EXISTING BOX CULVERT

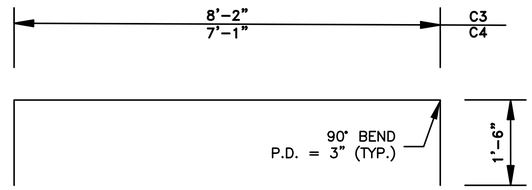

C3 & C4 BARS – #4

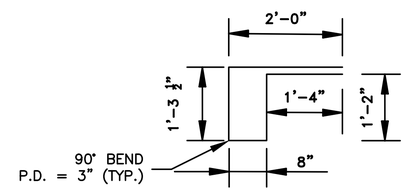

C2 BARS – #4

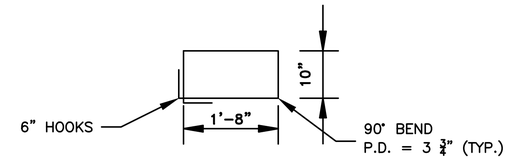

C1 BARS – #5

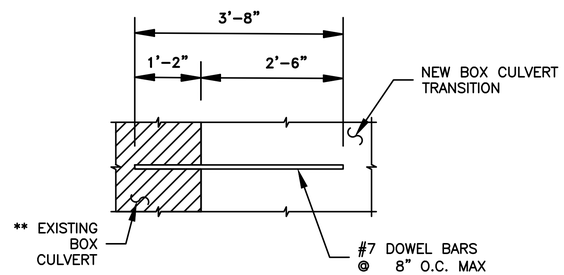

DETAIL A

** BARS SHOWN TO BE EMBEDDED INTO EXISTING BOX CULVERT SHALL BE SECURED USING HILTI HIT RE500 EPOXY ANCHOR OR APPROVED EQUAL. ALL BARS SHALL BE EMBEDDED TO DEPTH SHOWN IN DETAIL A IN STRICT ACCORDANCE WITH MANUFACTURER'S INSTRUCTIONS. HOLES FOR EMBEDDED BARS SHALL BE DRILLED 1/4" LARGER IN DIAMETER THAN THE BAR.

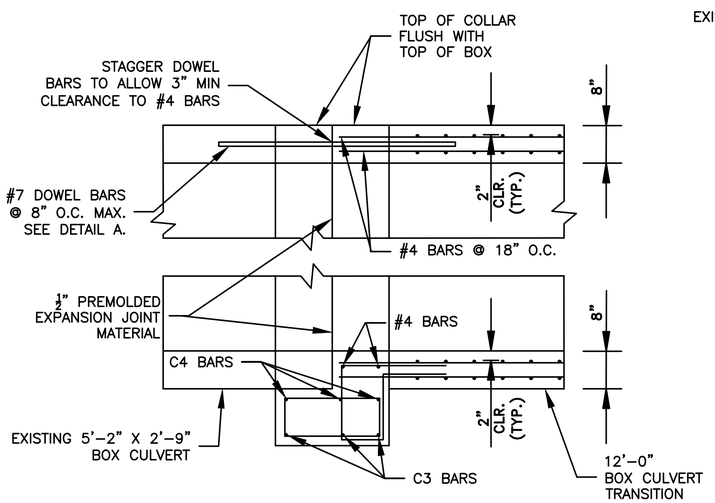

SECTION D-D

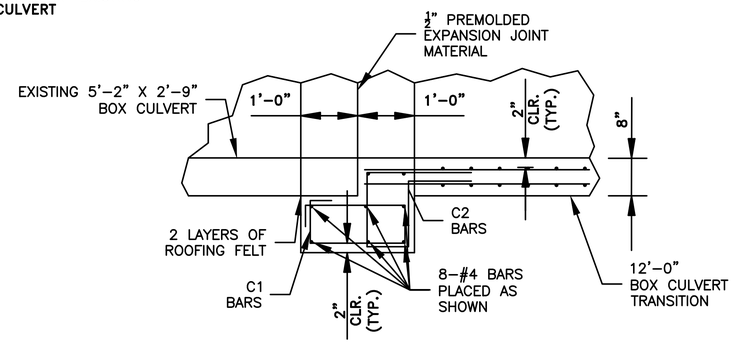

SECTION E-E

GENERAL NOTES:

1. ALL CONSTRUCTION AND MATERIAL REQUIREMENTS SHALL BE IN ACCORDANCE WITH THE CITY OF LITTLE ROCK CONTRACT CONDITIONS AND SPECIFICATIONS.
2. CONCRETE: CONCRETE SHALL BE POURED IN THE DRY AND ALL EXPOSED CORNERS TO BE CHAMFERED 3/4". ALL CONCRETE SHALL BE CLASS S WITH A MINIMUM 28 DAY COMPRESSIVE STRENGTH F'C=3,500 PSI.
3. REINFORCING STEEL: ALL REINFORCING STEEL SHALL CONFORM TO AASHTO M31 OR M53, GRADE 60 AND HAVE A 2" MINIMUM CLEARANCE UNLESS OTHERWISE NOTED ON PLANS.
4. REINFORCING STEEL IN BOTTOM SLAB SHALL BE SUPPORTED ON BAR CHAIRS. CHAIRS SHALL BE SUPPORTED ON TIMBER PLANKS OR CLASS C CONCRETE STRIPS SPACED AT 4.0 FOOT CENTERS. THE TOP CHAIR SUPPORTS SHALL BE AT THE ELEVATION OF THE BOTTOM OF THE FOOTING.
5. REINFORCING STEEL IN THE TOP SLAB SHALL BE SUPPORTED ON SLAB SPACERS.
6. REINFORCING STEEL IN THE WALLS SHALL BE HELD IN PLACE BY METAL CHAIRS. MAXIMUM SPACING OF CHAIRS SHALL BE ON 6.0 FOOT CENTERS.
7. COST OF METAL CHAIRS, WOOD PLANKS OR CONRETE STRIPS SHALL BE INCLUDED ON OTHER ITEMS OF WORK.
8. EXCAVATION AND BACKFILL REQUIRED TO CONSTRUCT THE BOX CULVERT WILL NOT BE MEASURED FOR SEPARATE PAYMENT, BUT WILL BE CONSIDERED SUBSIDIARY WORK PERTAINING TO THE CONSTRUCTION OF THE BOX CULVERT.
9. ALL MATERIALS AND WORK FOR THE BOX CULVERT TRANSITIONS AND CONCRETE COLLAR SHALL BE PAID FOR AT THE UNIT PRICE BID PER CUBIC YARD FOR REINFORCED CONCRETE BOX CULVERT TRANSITION.

REVISIONS	DATE

CITY OF LITTLE ROCK, ARKANSAS
S. VALENTINE STREET DRAINAGE IMPROVEMENTS

SPECIAL DETAILS

DEPARTMENT OF PUBLIC WORKS
CIVIL ENGINEERING
701 W. MARKHAM
LITTLE ROCK, ARKANSAS 72201

STATE OF ARKANSAS
LICENSED PROFESSIONAL ENGINEER
No.18314
RICHARD C. CORBYN
Digitally Signed 02/03/2020

DRAWN BY	AMW
DESIGNED	WMM
CHECKED	RCC
DATE	2-3-2020
SCALE	N.T.S.
PROJECT NO.	03-15-DR-95
SHEET NO.	C5

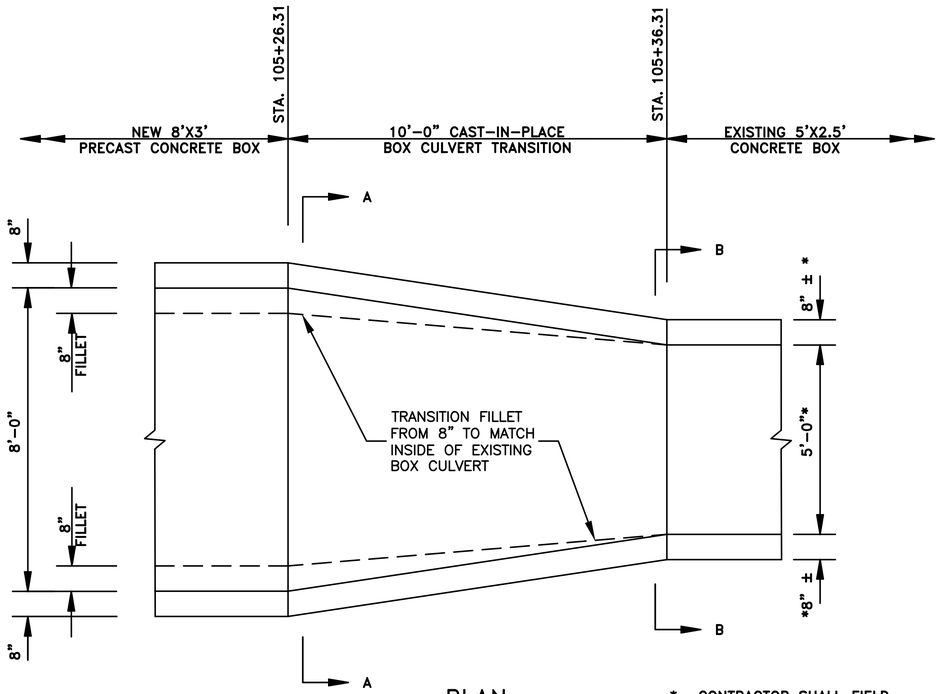

PLAN

* CONTRACTOR SHALL FIELD VERIFY. NEW BOX CULVERT TRANSITION SHALL MATCH DIMENSIONS OF EXISTING BOX CULVERT

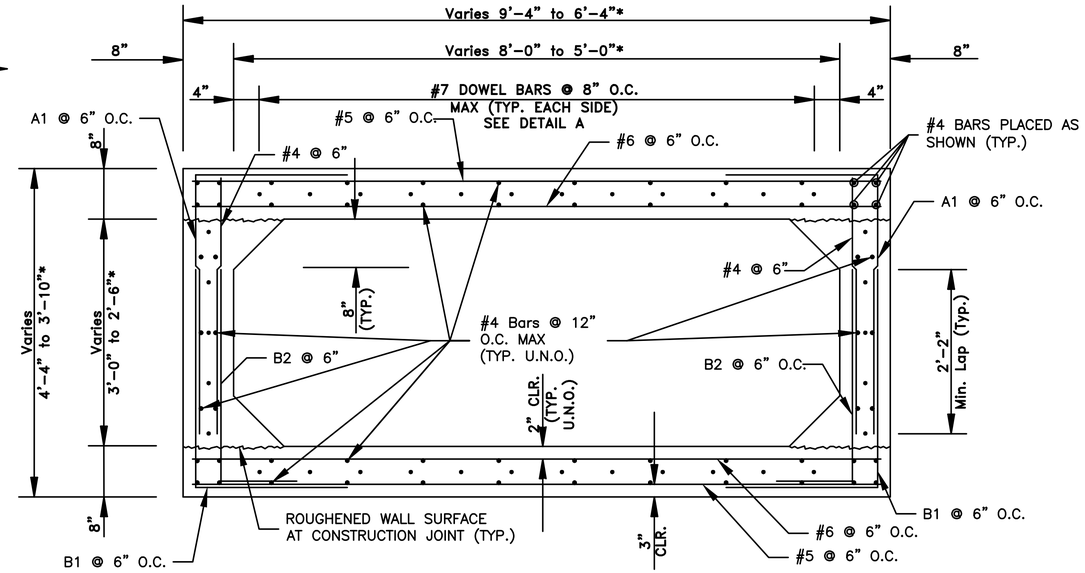

SECTION A–A

LEGEND

U.N.O – UNLESS NOTED OTHERWISE

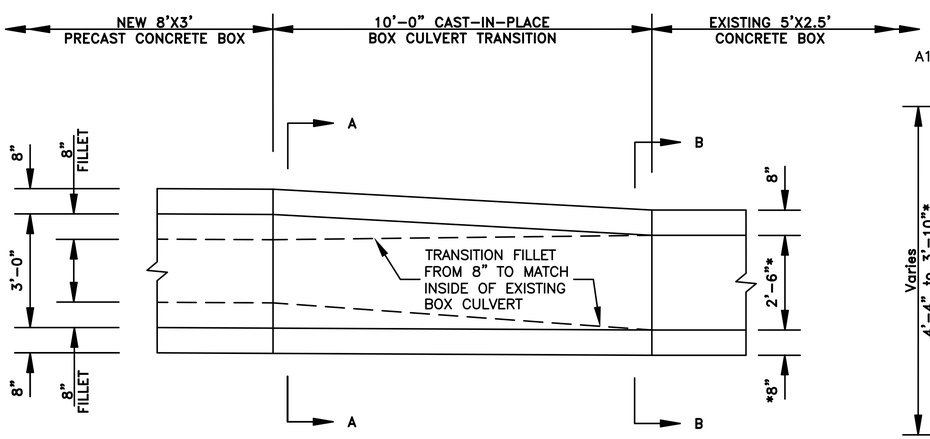

ELEVATION

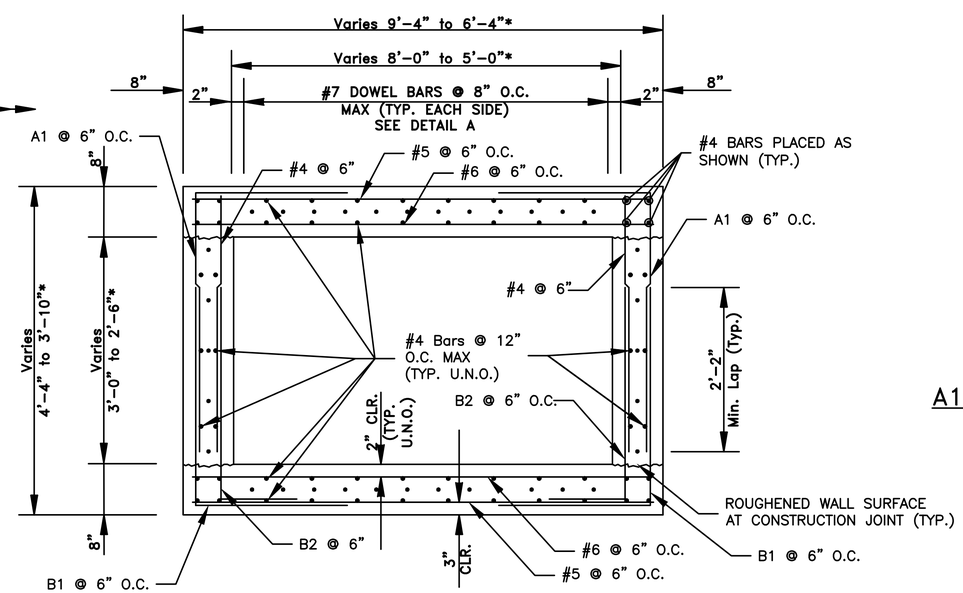

SECTION B–B

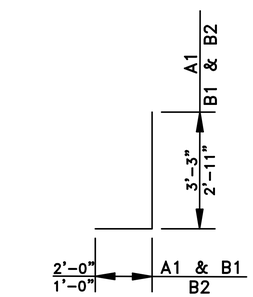

A1, B1, & B2 – #5

REVISIONS	DATE

CITY OF LITTLE ROCK, ARKANSAS
S. VALENTINE STREET DRAINAGE IMPROVEMENTS

SPECIAL DETAILS

DEPARTMENT OF PUBLIC WORKS
CIVIL ENGINEERING
701 W. MARKHAM
LITTLE ROCK, ARKANSAS 72201

STATE OF ARKANSAS
LICENSED PROFESSIONAL ENGINEER
No.18314
RICHARD C. CORBYN
Digitally Signed 02/03/2020

DRAWN BY	AMW
DESIGNED	WMM
CHECKED	RCC
DATE	2-3-2020
SCALE	N.T.S.
PROJECT NO.	03-15-DR-95
SHEET NO.	C6

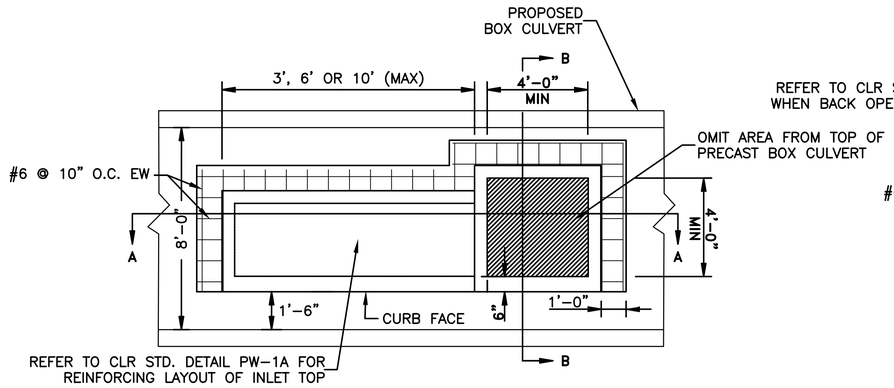

PLAN

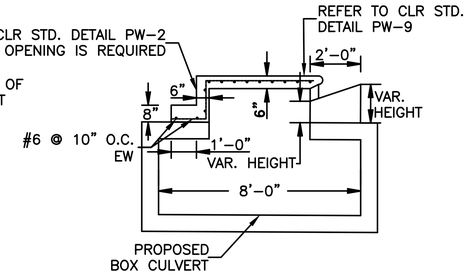

SECTION B-B

NOTE:

ALL REINFORCING TO BE PLACED 1-1/2" CLEAR TO THE INSIDE OF STRUCTURE

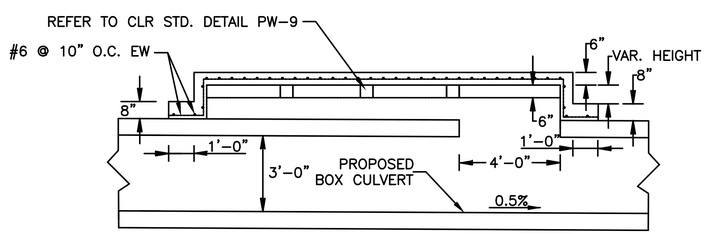

SECTION A-A

CURB INLET ON TOP OF BOX CULVERT DETAIL
CI-1, CI-2, CI-3

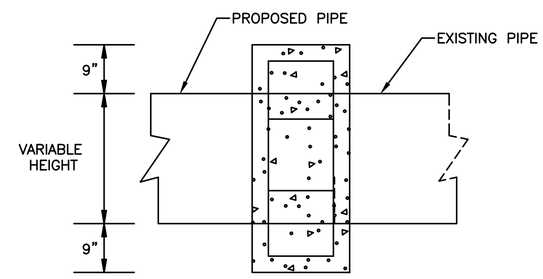

SIDE VIEW

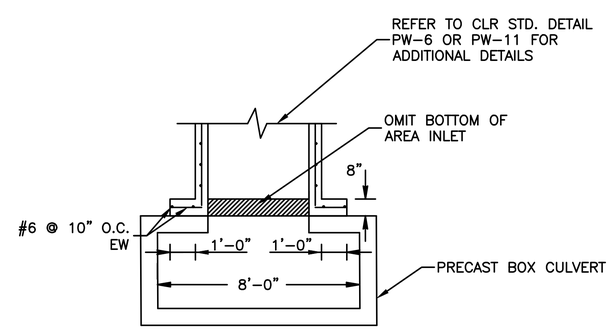

NOTE:

ALL REINFORCING TO BE PLACED 1-1/2" CLEAR TO THE INSIDE OF STRUCTURE

AREA INLET OR JUNCTION BOX ON TOP OF BOX CULVERT DETAIL
AI-1, JB-1

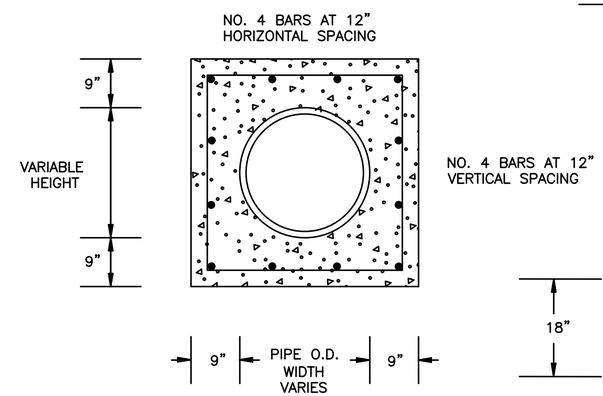

FRONT VIEW

NOTE: REINFORCING STEEL SHALL HAVE MIN. 3" COVER.

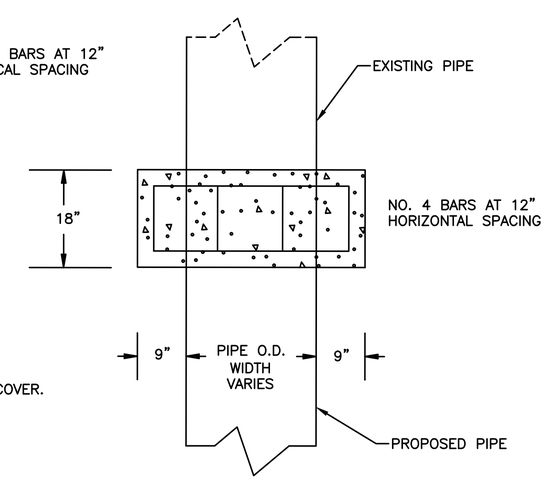

TOP VIEW

PIPE EXTENSION
REINFORCED CONCRETE COLLAR DETAIL
CC-1

REVISIONS	DATE

CITY OF LITTLE ROCK, ARKANSAS
S. VALENTINE STREET DRAINAGE IMPROVEMENTS
SPECIAL DETAILS

DEPARTMENT OF PUBLIC WORKS
CIVIL ENGINEERING
701 W. MARKHAM
LITTLE ROCK, ARKANSAS 72201

STATE OF ARKANSAS
LICENSED PROFESSIONAL ENGINEER
No.18314
RICHARD C. CORBYN
Digitally Signed 02/03/2020

DRAWN BY	MJM
DESIGNED	MJM
CHECKED	RCC
DATE	2-3-2020
SCALE	N.T.S.
PROJECT NO.	03-15-DR-95
SHEET NO.	C7

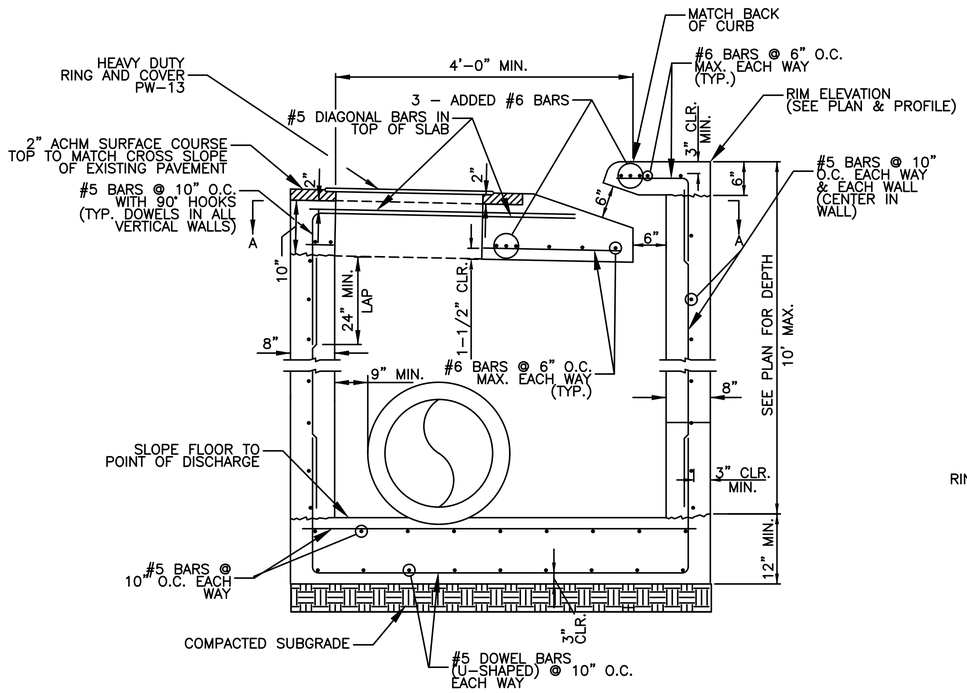

NOTE:

1. ALL EXPOSED CORNERS SHALL HAVE 3/4" CHAMFER.
2. ALL REINFORCING BARS SHALL BE GRADE 60.
3. ALL WORK SHALL COMPLY WITH THE CITY OF LITTLE ROCK CONTRACT CONDITIONS AND SPECIFICATIONS.

REVERSE THROAT CURB INLET
CI-4

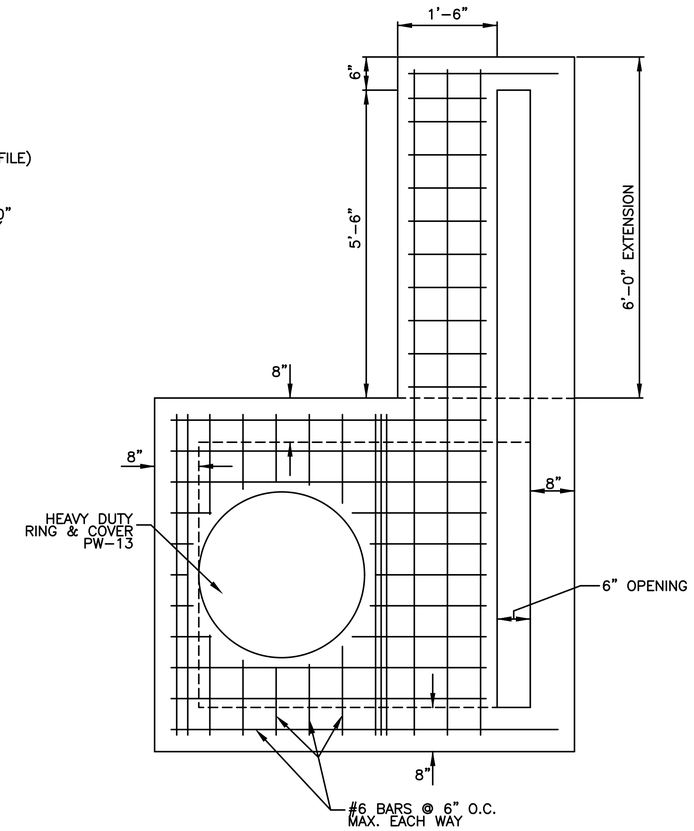

SECTION A-A

(SHOWING BOTTOM MAT OF TOP SLAB)

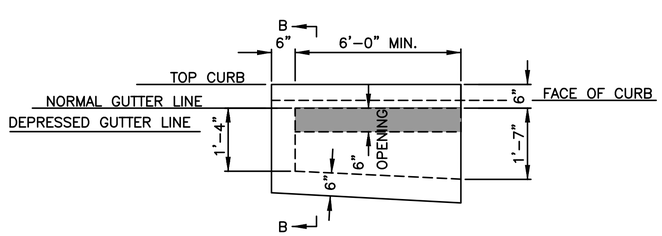

6'-0" EXTENSION

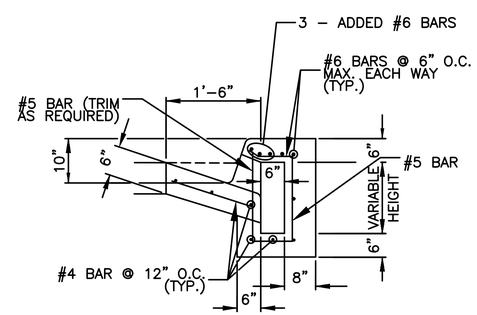

SECTION B-B

REVERSE THROAT EXTENSION DETAIL
N.T.S.

REVISIONS	DATE

CITY OF LITTLE ROCK, ARKANSAS
S. VALENTINE STREET DRAINAGE IMPROVEMENTS

SPECIAL DETAILS

DEPARTMENT OF PUBLIC WORKS
CIVIL ENGINEERING
701 W. MARKHAM
LITTLE ROCK, ARKANSAS 72201

STATE OF ARKANSAS
LICENSED PROFESSIONAL ENGINEER
No.18314
RICHARD C. CORBYN
Digitally Signed 02/03/2020

DRAWN BY	AMW
DESIGNED	MJM
CHECKED	RCC
DATE	2-3-2020
SCALE	N.T.S.
PROJECT NO.	03-15-DR-95
SHEET NO.	C8

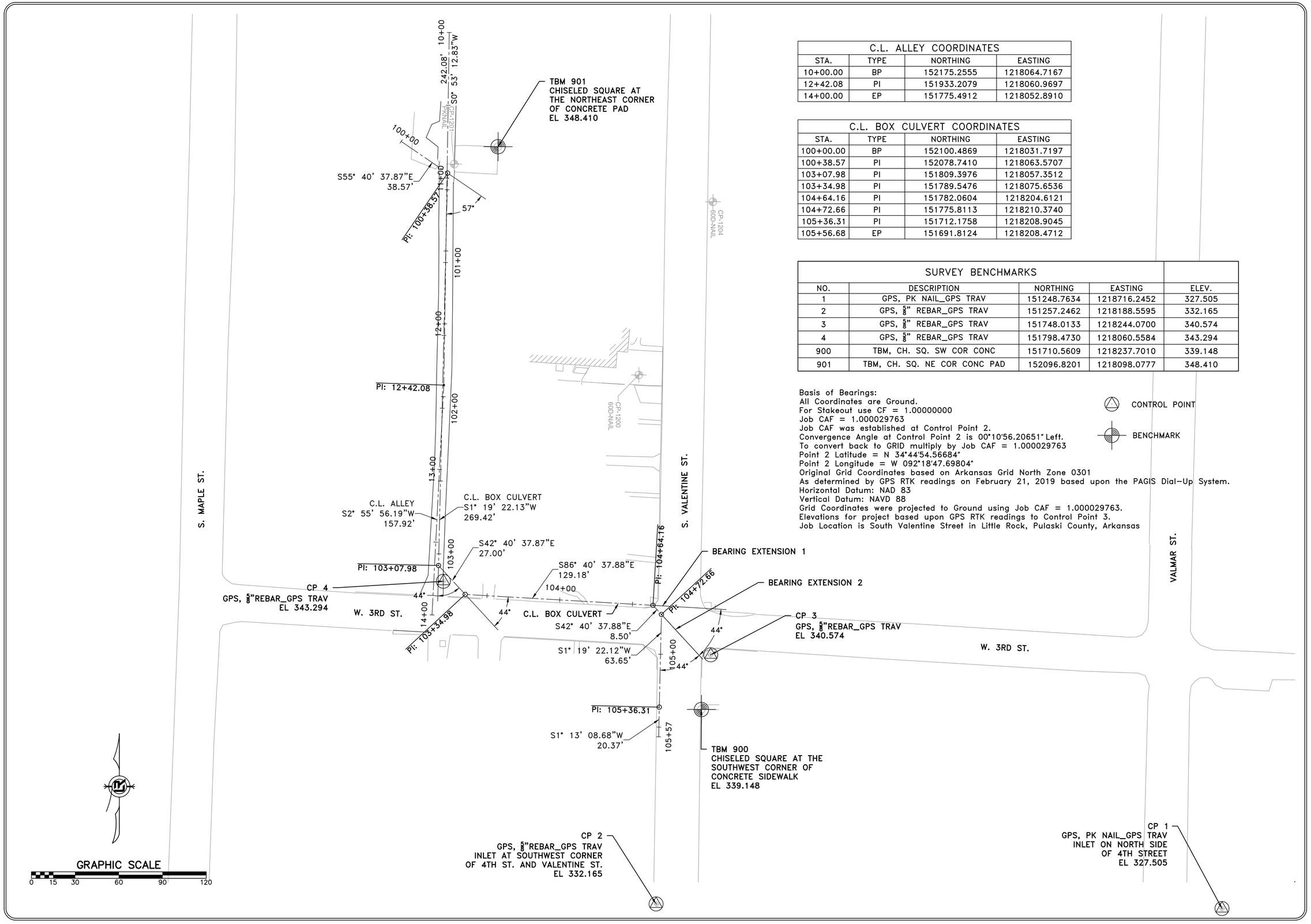

C.L. ALLEY COORDINATES			
STA.	TYPE	NORTHING	EASTING
10+00.00	BP	152175.2555	1218064.7167
12+42.08	PI	151933.2079	1218060.9697
14+00.00	EP	151775.4912	1218052.8910

C.L. BOX CULVERT COORDINATES			
STA.	TYPE	NORTHING	EASTING
100+00.00	BP	152100.4869	1218031.7197
100+38.57	PI	152078.7410	1218063.5707
103+07.98	PI	151809.3976	1218057.3512
103+34.98	PI	151789.5476	1218075.6536
104+64.16	PI	151782.0604	1218204.6121
104+72.66	PI	151775.8113	1218210.3740
105+36.31	PI	151712.1758	1218208.9045
105+56.68	EP	151691.8124	1218208.4712

SURVEY BENCHMARKS				
NO.	DESCRIPTION	NORTHING	EASTING	ELEV.
1	GPS, PK NAIL_GPS TRAV	151248.7634	1218716.2452	327.505
2	GPS, 5/8" REBAR_GPS TRAV	151257.2462	1218188.5595	332.165
3	GPS, 5/8" REBAR_GPS TRAV	151748.0133	1218244.0700	340.574
4	GPS, 5/8" REBAR_GPS TRAV	151798.4730	1218060.5584	343.294
900	TBM, CH. SQ. SW COR CONC	151710.5609	1218237.7010	339.148
901	TBM, CH. SQ. NE COR CONC PAD	152096.8201	1218098.0777	348.410

Basis of Bearings:
All Coordinates are Ground.
For Stakeout use CF = 1.00000000
Job CAF = 1.000029763
Job CAF was established at Control Point 2.
Convergence Angle at Control Point 2 is 00°10'56.20651" Left.
To convert back to GRID multiply by Job CAF = 1.000029763
Point 2 Latitude = N 34°44'54.56684"
Point 2 Longitude = W 092°18'47.69804"
Original Grid Coordinates based on Arkansas Grid North Zone 0301
As determined by GPS RTK readings on February 21, 2019 based upon the PAGIS Dial-Up System.
Horizontal Datum: NAD 83
Vertical Datum: NAVD 88
Grid Coordinates were projected to Ground using Job CAF = 1.000029763.
Elevations for project based upon GPS RTK readings to Control Point 3.
Job Location is South Valentine Street in Little Rock, Pulaski County, Arkansas

REVISIONS	DATE

CITY OF LITTLE ROCK, ARKANSAS
S. VALENTINE STREET DRAINAGE IMPROVEMENTS

FIELD TIES / LAYOUT
BOP TO EOP

DEPARTMENT OF PUBLIC WORKS
CIVIL ENGINEERING
701 W. MARKHAM
LITTLE ROCK, ARKANSAS 72201

STATE OF ARKANSAS
LICENSED PROFESSIONAL ENGINEER
No.18314
RICHARD C. CORBYN
Digitally Signed 02/03/2020

DRAWN BY	MJM
DESIGNED	MJM
CHECKED	RCC
DATE	2-3-2020
SCALE	H: 1"=30'
PROJECT NO.	03-15-DR-95
SHEET NO.	C9

FENCES AND WALLS					
STA.	STA.	SIDE	FENCE TYPE	REMOVE (FT)	CONSTRUCT (FT)
100+04	100+11	LT. & RT.	6' WOOD	14'	14'
100+15	100+57	RT.	6' WOOD	36'	36'
100+57	100+66	RT.	6' WOOD GATE (DOUBLE SWING)	10'	10'
100+66	100+76	RT.	6' WOOD	11'	11'
100+82	101+26	LT.	6' WOOD	45'	45'
101+27	101+43	LT.	6' WOOD	17	17
101+74	103+09	RT.	ROCK WALL	145'	--
102+24	102+72	LT.	4' CHAIN LINK	48'	48'
102+72	103+47	LT.	6' WOOD	72'	72'

*FENCES SHALL BE CONSTRUCTED ALONG EXISTING/PROPOSED PROPERTY LINES IN LOCATIONS WHERE THE EXISTING FENCE IS REMOVED.
**STATIONS BASED ON C.L. OF BOX CULVERT

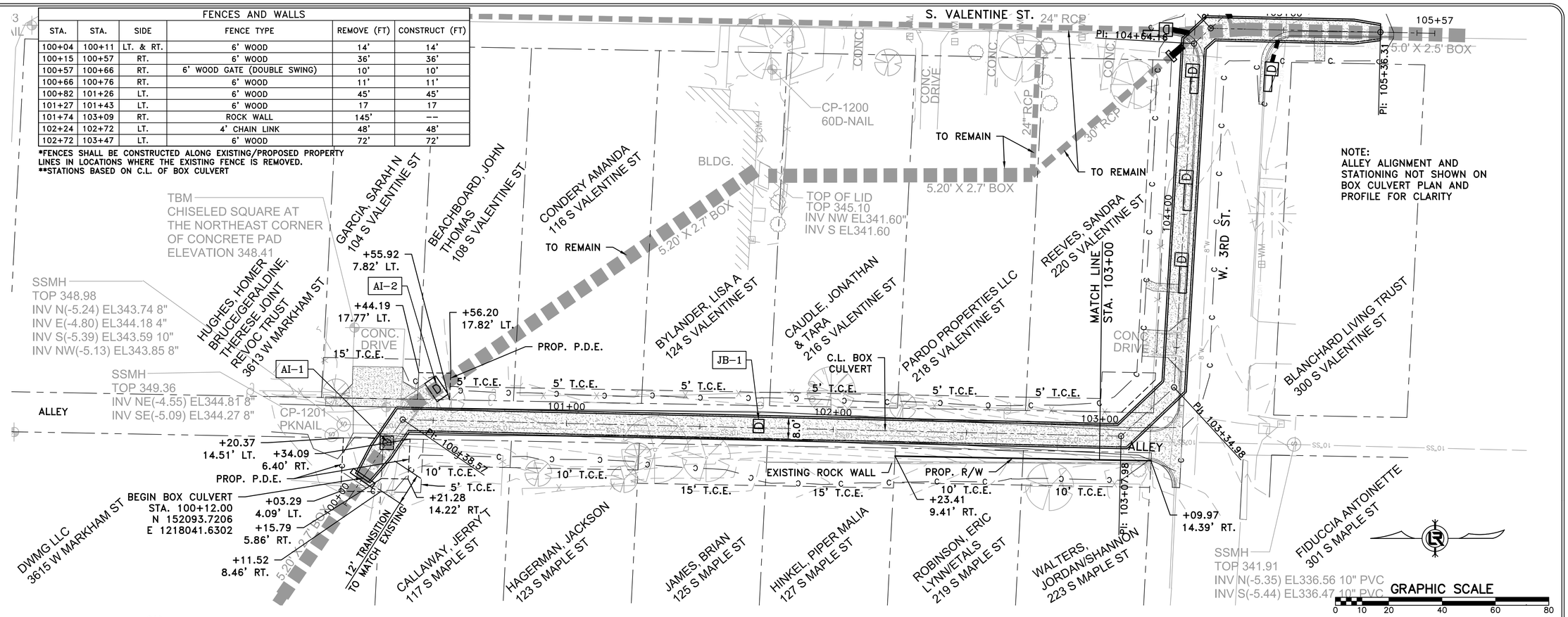

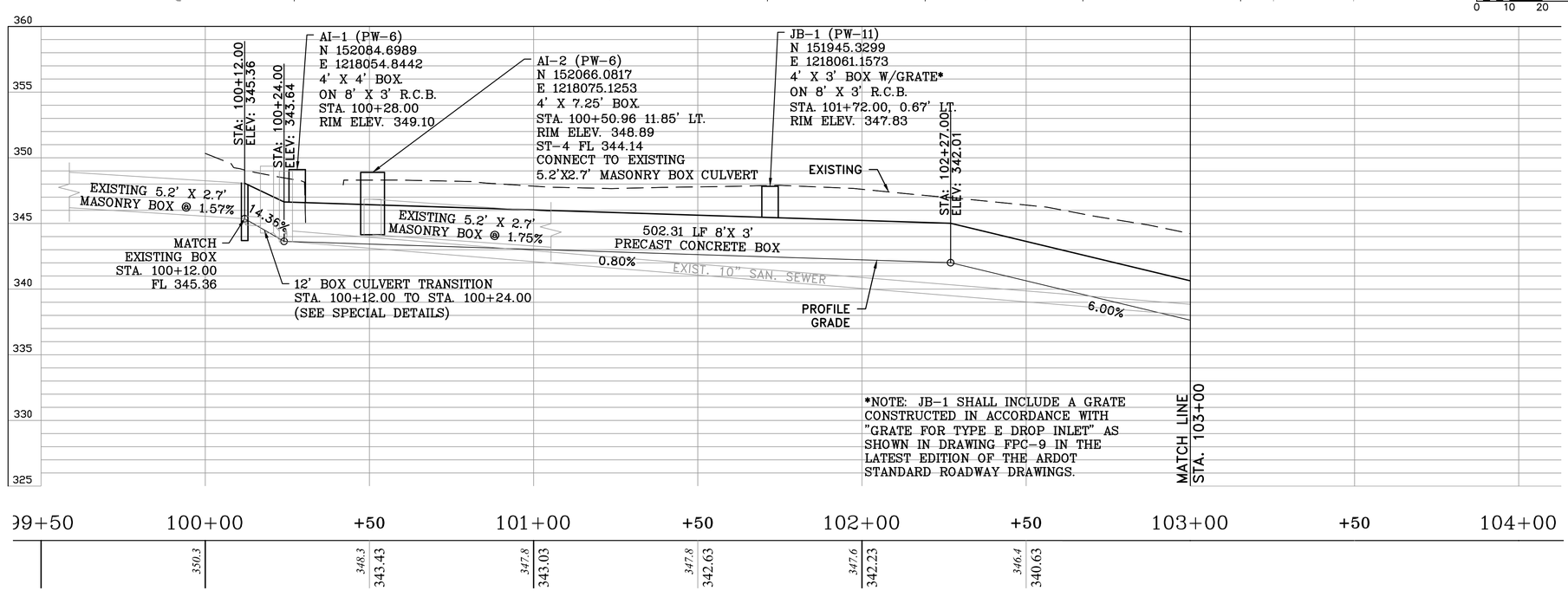

ALIGNMENT – BOX CULVERT

REVISIONS	DATE

CITY OF LITTLE ROCK, ARKANSAS
S. VALENTINE STREET DRAINAGE IMPROVEMENTS

BOX CULVERT 1
PLAN & PROFILE - STA 10+00 TO 13+00

DEPARTMENT OF PUBLIC WORKS
CIVIL ENGINEERING
701 W. MARKHAM
LITTLE ROCK, ARKANSAS 72201

STATE OF ARKANSAS
LICENSED PROFESSIONAL ENGINEER
No.18314
RICHARD C. CORBYN
Digitally Signed 02/03/2020

DRAWN BY	MJM
DESIGNED	MJM
CHECKED	RCC
DATE	2-3-2020
SCALE	H: 1"=20' V: 1"=5'
PROJECT NO.	03-15-DR-95
SHEET NO.	C10

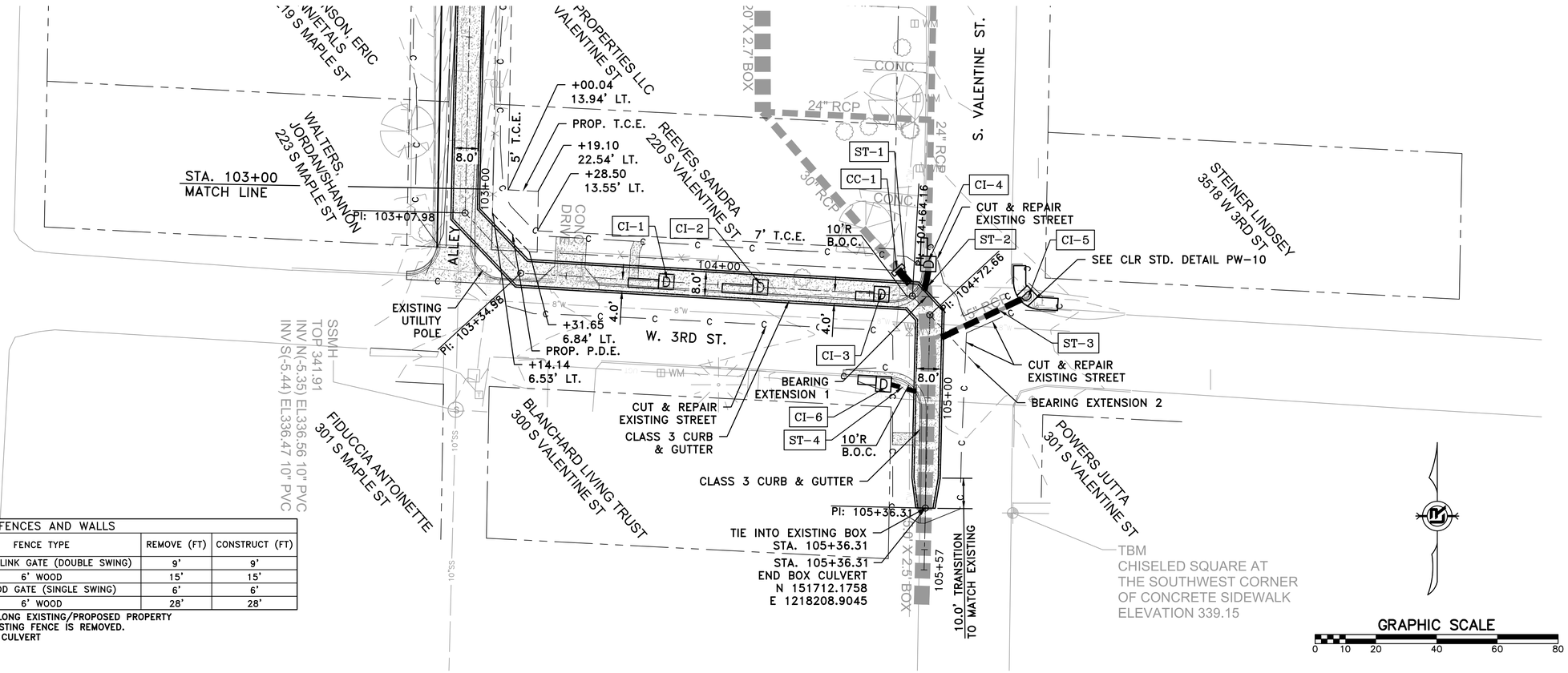

FENCES AND WALLS					
STA.	STA.	SIDE	FENCE TYPE	REMOVE (FT)	CONSTRUCT (FT)
103+47	103+55	LT.	4' CHAIN LINK GATE (DOUBLE SWING)	9'	9'
103+55	103+70	LT.	6' WOOD	15'	15'
103+70	103+76	LT.	6' WOOD GATE (SINGLE SWING)	6'	6'
103+76	104+00	LT.	6' WOOD	28'	28'

*FENCES SHALL BE CONSTRUCTED ALONG EXISTING/PROPOSED PROPERTY LINES IN LOCATIONS WHERE THE EXISTING FENCE IS REMOVED.
**STATIONS BASED ON C.L. OF BOX CULVERT

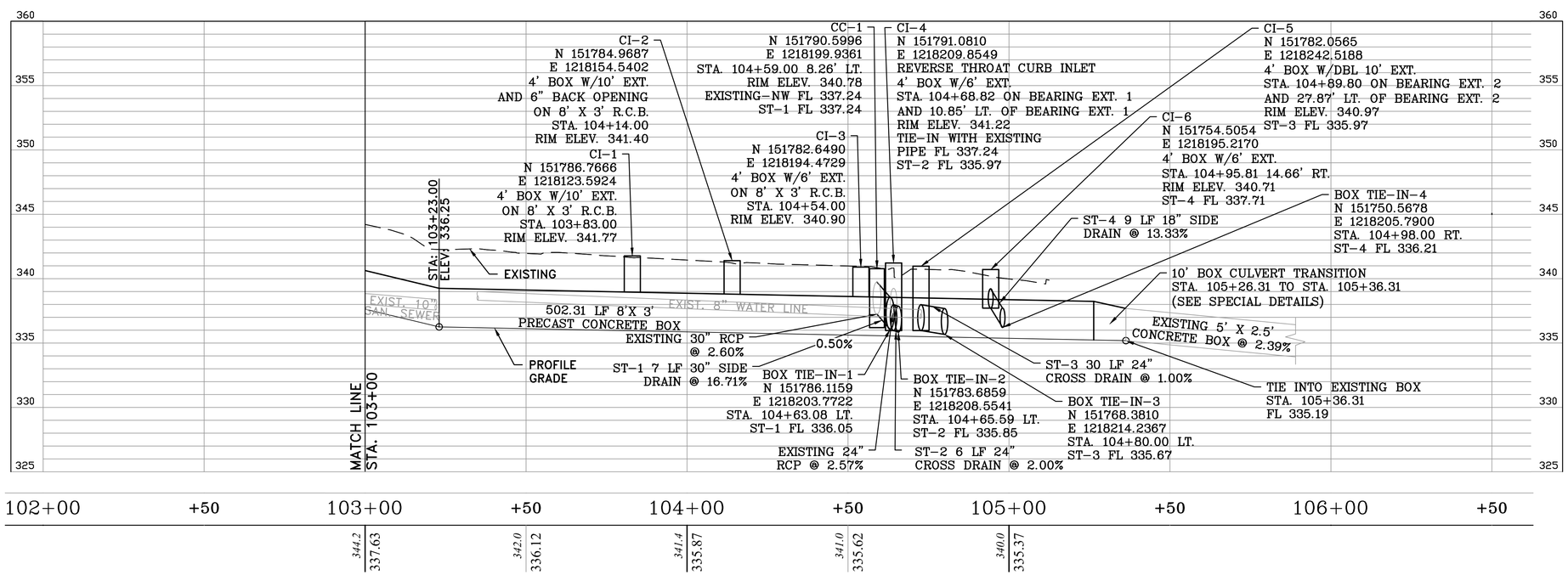

ALIGNMENT – BOX CULVERT

REVISIONS	DATE

CITY OF LITTLE ROCK, ARKANSAS
S. VALENTINE STREET DRAINAGE IMPROVEMENTS

BOX CULVERT 2
PLAN & PROFILE - STA 13+00 TO STA. 15+57

DEPARTMENT OF PUBLIC WORKS
CIVIL ENGINEERING
701 W. MARKHAM
LITTLE ROCK, ARKANSAS 72201

STATE OF ARKANSAS
LICENSED PROFESSIONAL ENGINEER
No.18314
RICHARD C. CORBYN
Digitally Signed 02/03/2020

DRAWN BY	MJM
DESIGNED	MJM
CHECKED	RCC
DATE	2-3-2020
SCALE	H: 1"=20' V: 1"=5'
PROJECT NO.	03-15-DR-95
SHEET NO.	C11

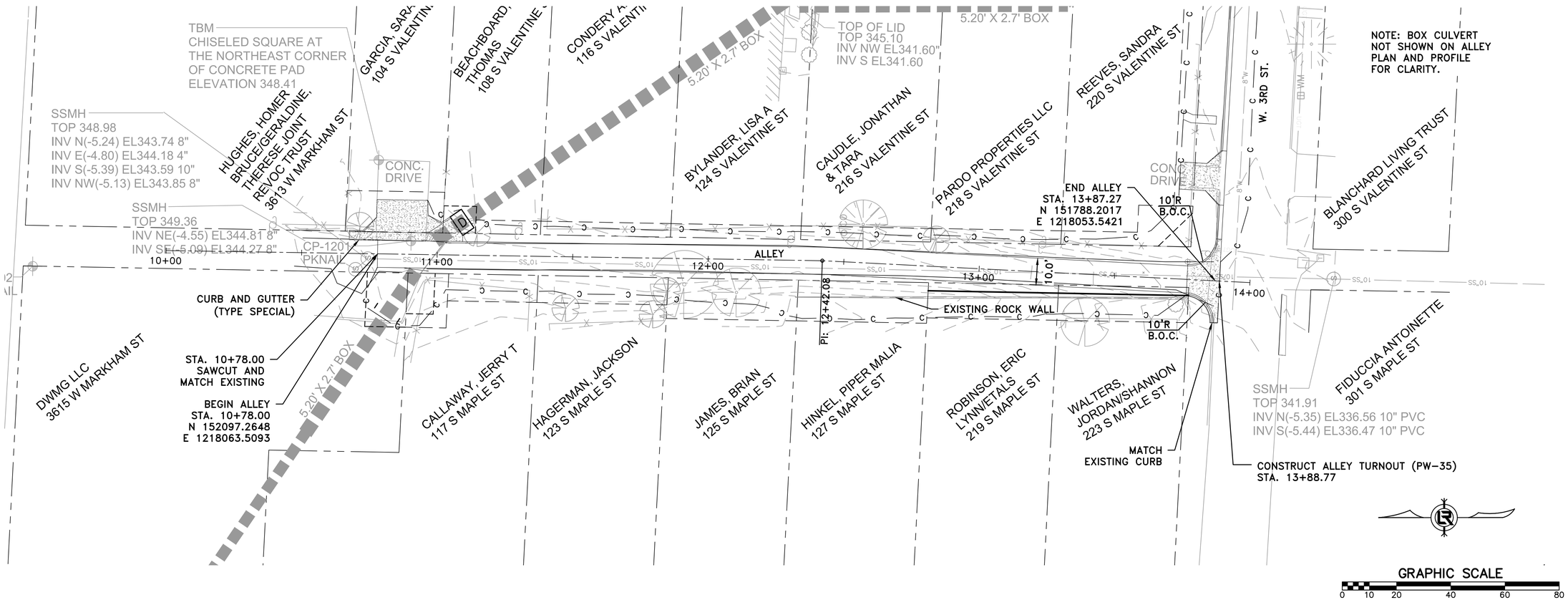

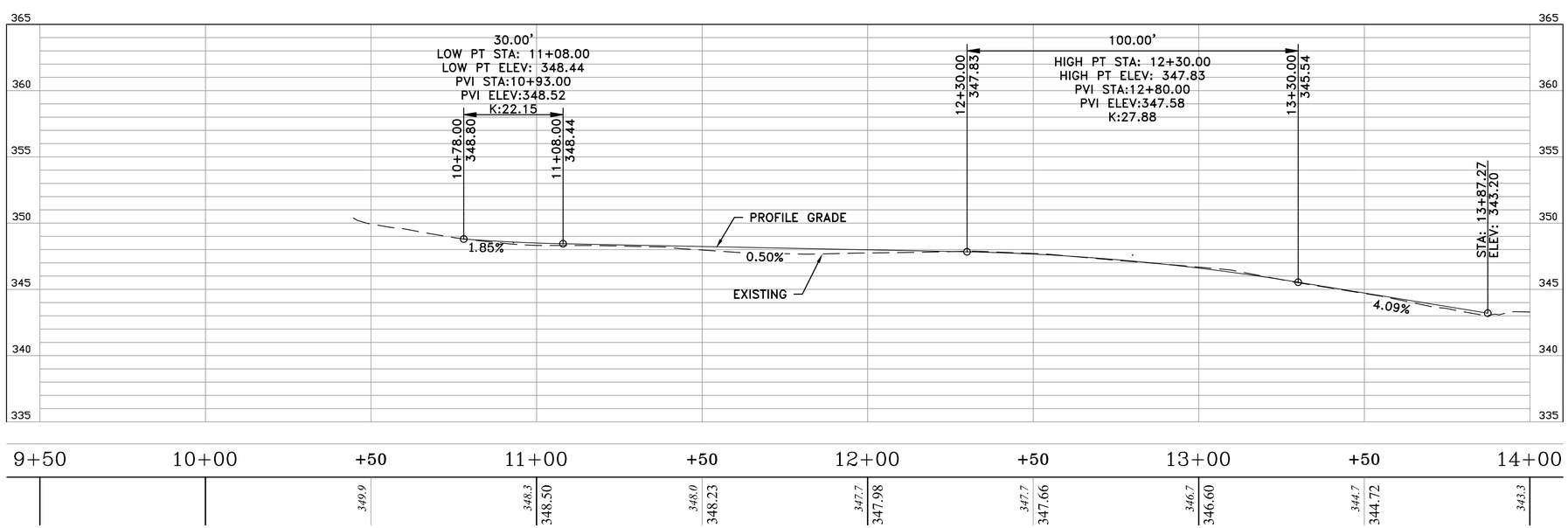

ALIGNMENT – ALLEY

REVISIONS	DATE

CITY OF LITTLE ROCK, ARKANSAS
S. VALENTINE STREET DRAINAGE IMPROVEMENTS

ALLEY
PLAN & PROFILE - STA 10+00 TO 14+00

DEPARTMENT OF PUBLIC WORKS
CIVIL ENGINEERING
701 W. MARKHAM
LITTLE ROCK, ARKANSAS 72201

STATE OF ARKANSAS
LICENSED PROFESSIONAL ENGINEER
No.18314
RICHARD C. CORBYN
Digitally Signed 02/03/2020

DRAWN BY	MJM
DESIGNED	MJM
CHECKED	RCC
DATE	2-3-2020
SCALE	H: 1"=20' V: 1"=5'
PROJECT NO.	03-15-DR-95
SHEET NO.	C12

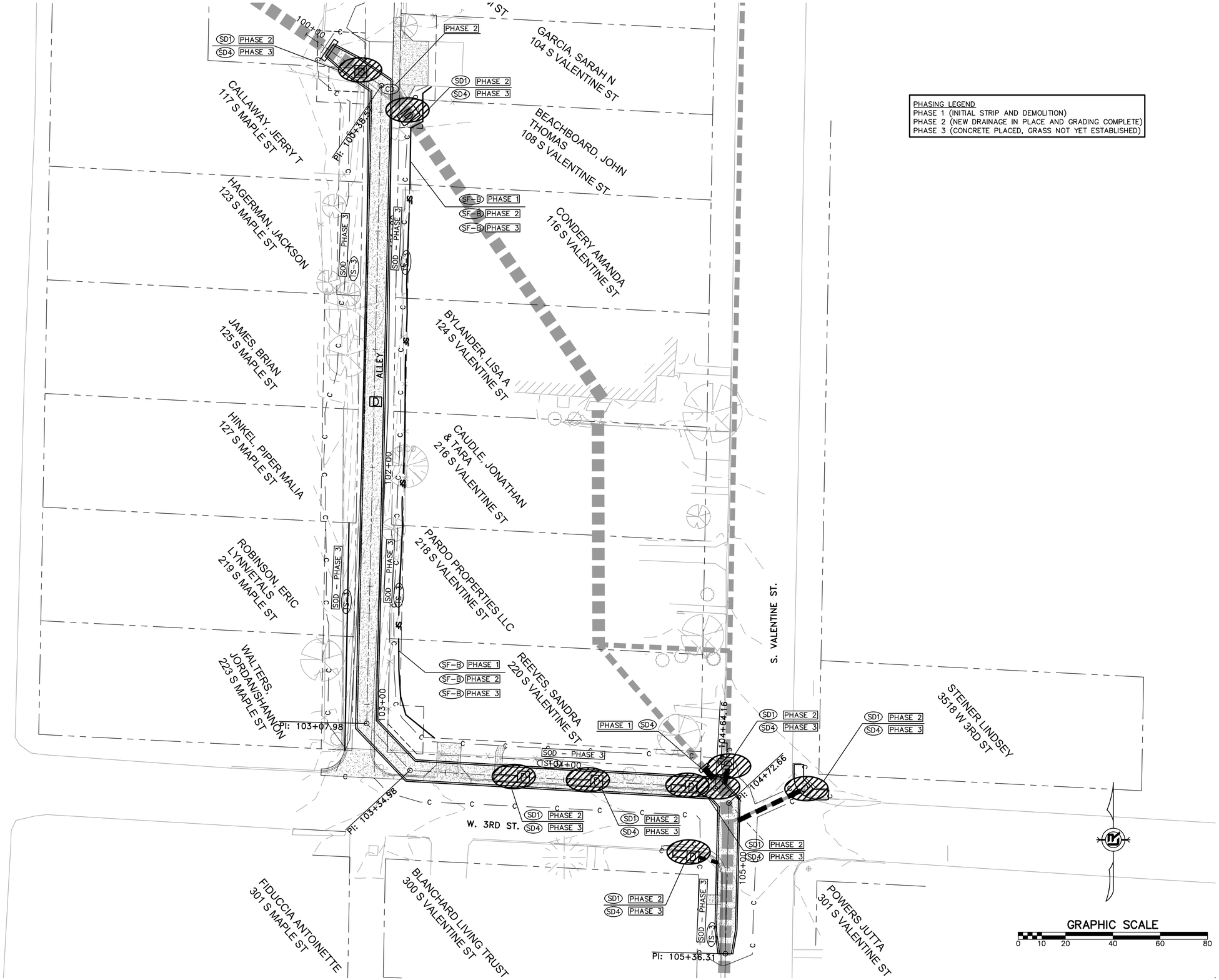

PHASING LEGEND
PHASE 1 (INITIAL STRIP AND DEMOLITION)
PHASE 2 (NEW DRAINAGE IN PLACE AND GRADING COMPLETE)
PHASE 3 (CONCRETE PLACED, GRASS NOT YET ESTABLISHED)

REVISIONS	DATE

CITY OF LITTLE ROCK, ARKANSAS
S. VALENTINE STREET DRAINAGE IMPROVEMENTS

EROSION CONTROL

DEPARTMENT OF PUBLIC WORKS
CIVIL ENGINEERING
701 W. MARKHAM
LITTLE ROCK, ARKANSAS 72201

STATE OF ARKANSAS
LICENSED PROFESSIONAL ENGINEER
No.18314
RICHARD C. CORBYN
Digitally Signed 02/03/2020

DRAWN BY	MJM
DESIGNED	MJM
CHECKED	RCC
DATE	2-3-2020
SCALE	1"=20'
PROJECT NO.	03-15-DR-95
SHEET NO.	C14

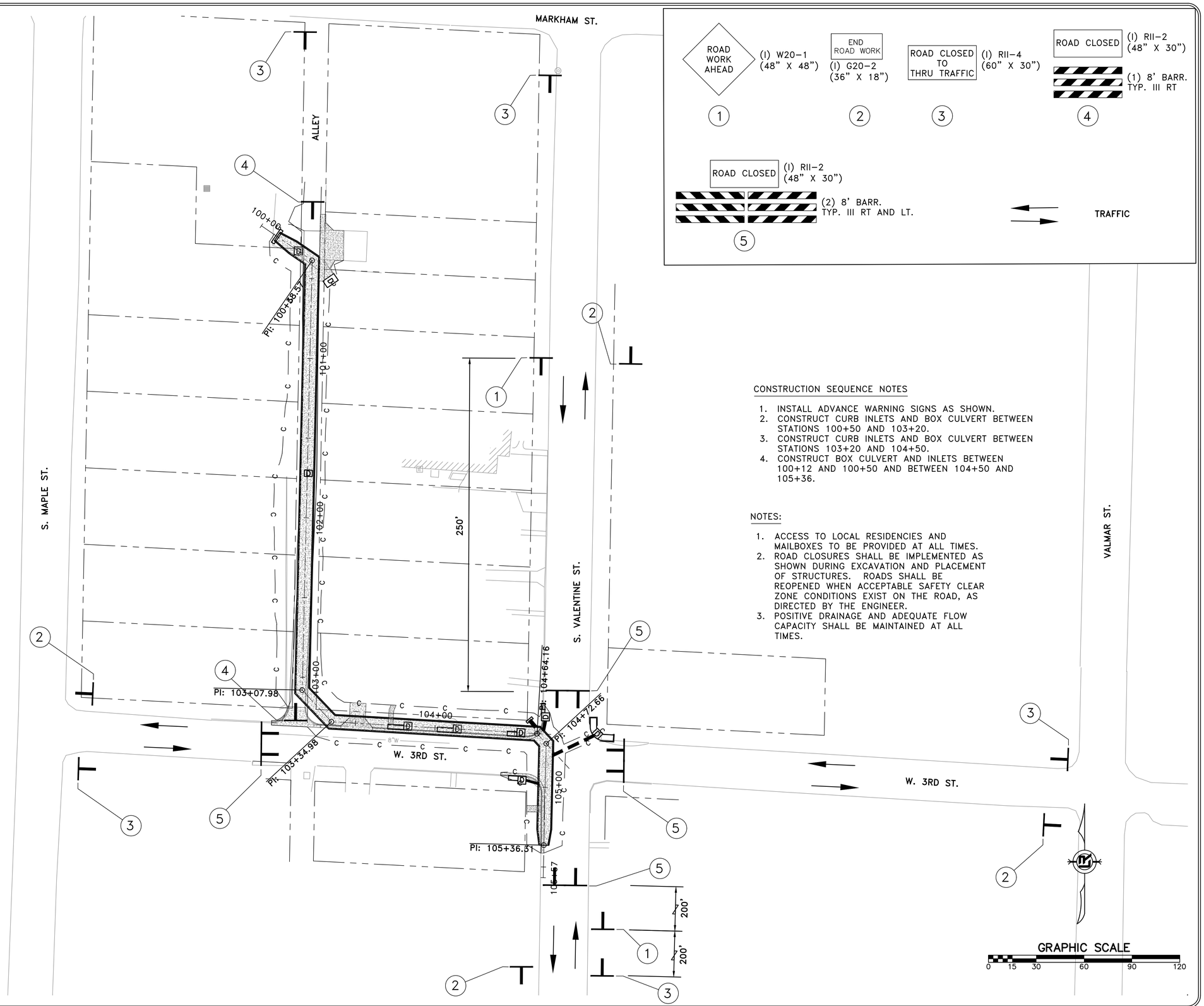

CONSTRUCTION SEQUENCE NOTES

1. INSTALL ADVANCE WARNING SIGNS AS SHOWN.
2. CONSTRUCT CURB INLETS AND BOX CULVERT BETWEEN STATIONS 100+50 AND 103+20.
3. CONSTRUCT CURB INLETS AND BOX CULVERT BETWEEN STATIONS 103+20 AND 104+50.
4. CONSTRUCT BOX CULVERT AND INLETS BETWEEN 100+12 AND 100+50 AND BETWEEN 104+50 AND 105+36.

NOTES:

1. ACCESS TO LOCAL RESIDENCIES AND MAILBOXES TO BE PROVIDED AT ALL TIMES.
2. ROAD CLOSURES SHALL BE IMPLEMENTED AS SHOWN DURING EXCAVATION AND PLACEMENT OF STRUCTURES. ROADS SHALL BE REOPENED WHEN ACCEPTABLE SAFETY CLEAR ZONE CONDITIONS EXIST ON THE ROAD, AS DIRECTED BY THE ENGINEER.
3. POSITIVE DRAINAGE AND ADEQUATE FLOW CAPACITY SHALL BE MAINTAINED AT ALL TIMES.

REVISIONS	DATE

CITY OF LITTLE ROCK, ARKANSAS
S. VALENTINE STREET DRAINAGE IMPROVEMENTS

MAINTENANCE OF TRAFFIC

DEPARTMENT OF PUBLIC WORKS
CIVIL ENGINEERING
701 W. MARKHAM
LITTLE ROCK, ARKANSAS 72201

STATE OF ARKANSAS
LICENSED PROFESSIONAL ENGINEER
No.18314
RICHARD C. CORBYN
Digitally Signed 02/03/2020

DRAWN BY	MJM
DESIGNED	MJM
CHECKED	RCC
DATE	2-3-2020
SCALE	1"=30'
PROJECT NO.	03-15-DR-95
SHEET NO.	C15

DRIVEWAY AT ALLEY STA. 10+87.00 LT.

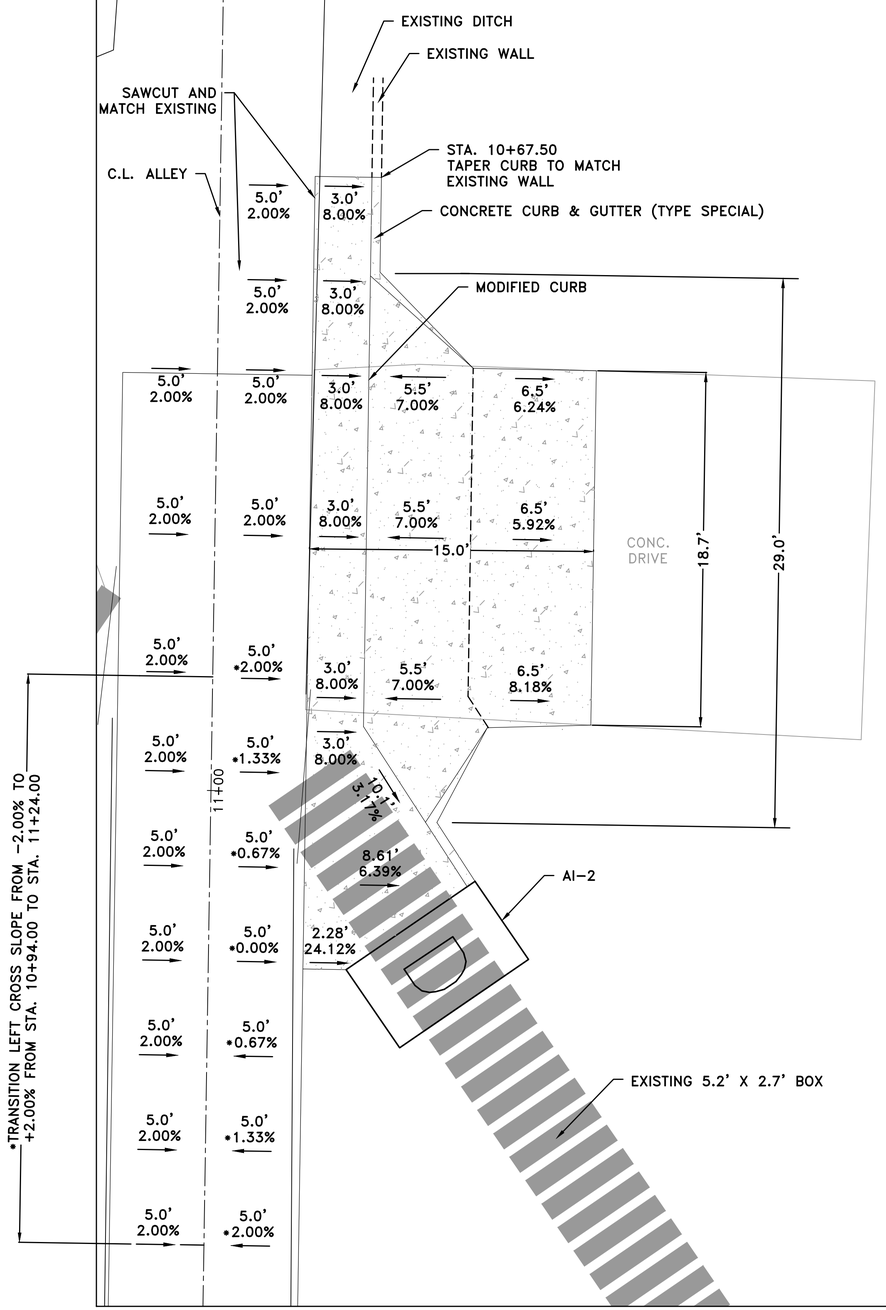

ALLEY TURNOUT

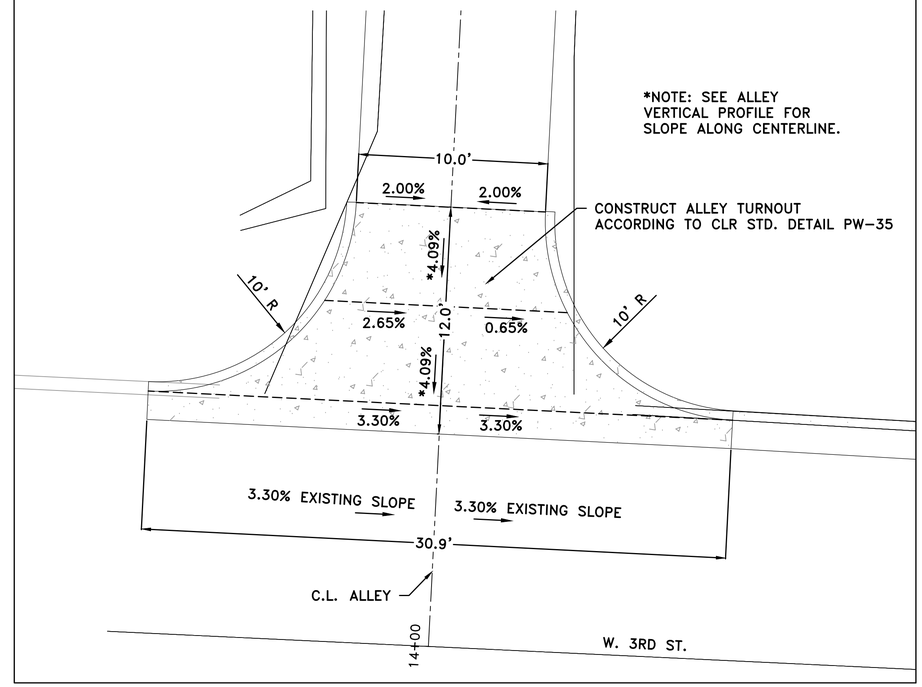

DRIVEWAY AT BOX CULVERT STA. 103+51.00

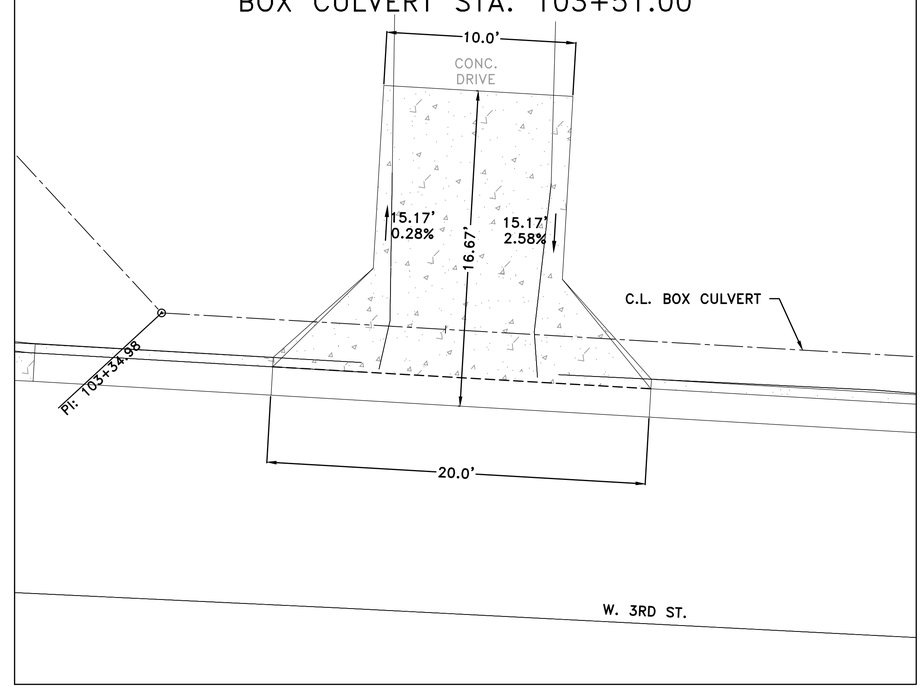

REVISIONS	DATE

CITY OF LITTLE ROCK, ARKANSAS
S. VALENTINE STREET DRAINAGE IMPROVEMENTS

DRIVEWAY DETAILS

DEPARTMENT OF PUBLIC WORKS
CIVIL ENGINEERING
701 W. MARKHAM
LITTLE ROCK, ARKANSAS 72201

STATE OF ARKANSAS
LICENSED PROFESSIONAL ENGINEER
No.18314
RICHARD C. CORBYN
Digitally Signed 02/03/2020

DRAWN BY	MJM
DESIGNED	MJM
CHECKED	RCC
DATE	2-3-2020
SCALE	N.T.S.
PROJECT NO.	03-15-DR-95
SHEET NO.	C13

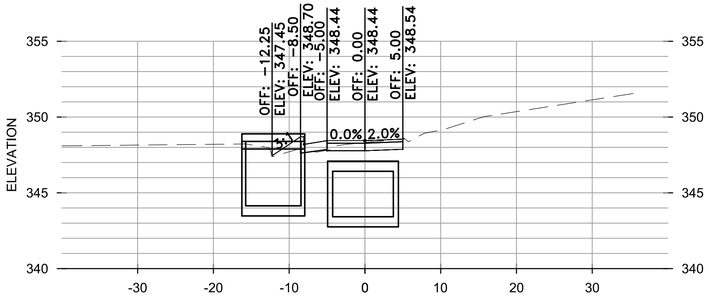

11+09

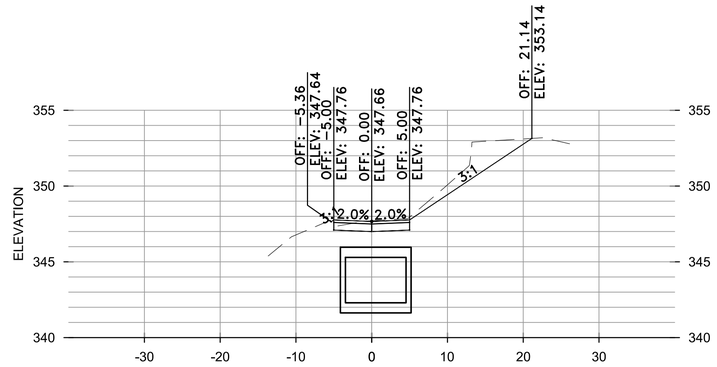

12+50

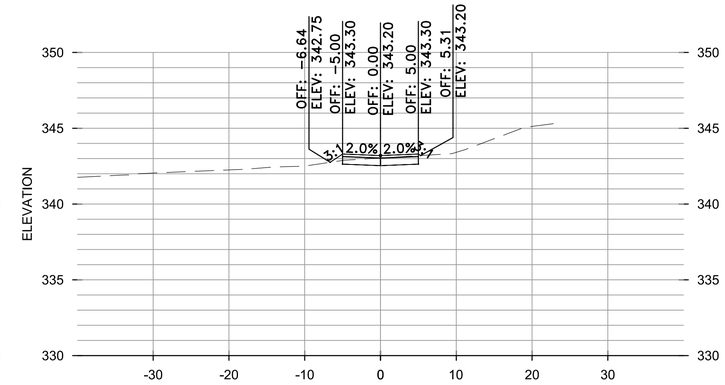

13+87.27

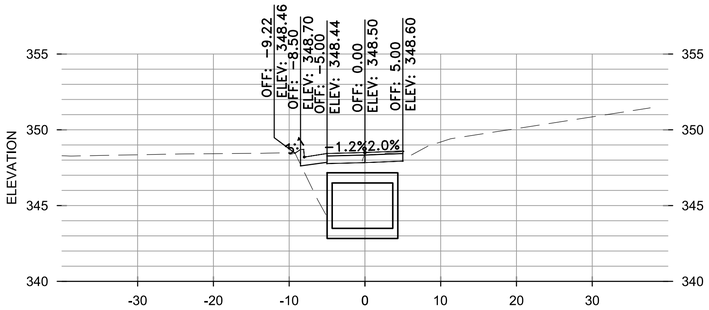

11+00

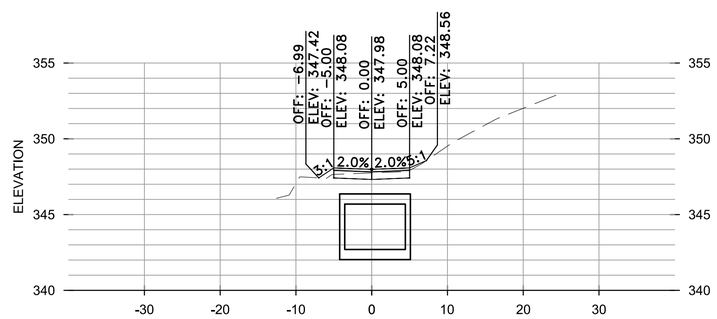

12+00

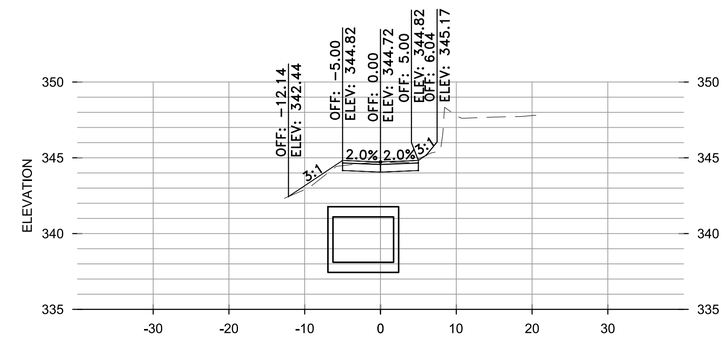

13+50

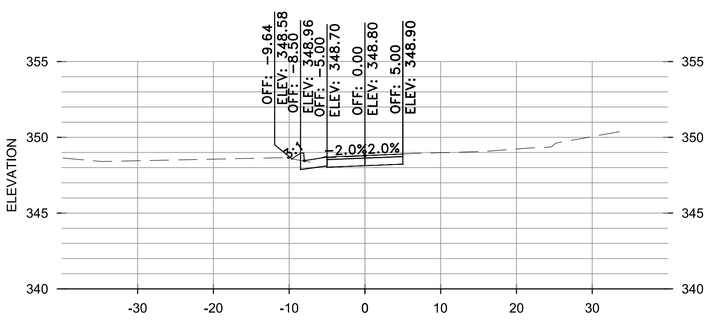

10+78

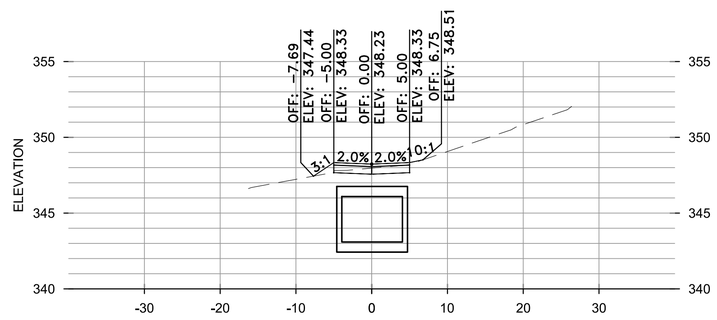

11+50

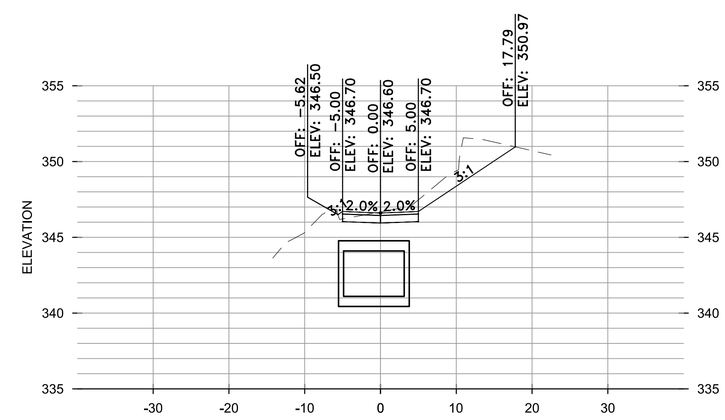

13+00

REVISIONS	DATE

CITY OF LITTLE ROCK, ARKANSAS

S. VALENTINE STREET DRAINAGE IMPROVEMENTS

CROSS SECTIONS

DEPARTMENT OF PUBLIC WORKS
CIVIL ENGINEERING
701 W. MARKHAM
LITTLE ROCK, ARKANSAS 72201

DRAWN BY	RCC
DESIGNED	RCC
CHECKED	RCC
DATE	2-3-2020
SCALE	N.T.S.
PROJECT NO.	03-15-DR-95
SHEET NO.	C16